HIMALAYAN

ROYAL ENFIELD SERVICE MANUAL

EURO V - 2023

This page is intentionally left blank

Foreword

Welcome to your new Royal Enfield Himalayan.

The all-new Himalayan is a creature of its environment. A profound, mystical space that is always changing, and changing fast.

There was no one machine designed for this journey. Until now. The all-new Himalayan has many motorcycles rolled into one.

It adapts to the terrain. It adapts to the rider. It adapts to the elements.

With its new 452cc liquid cooled Sherpa engine and 6 speed gearbox ready for any situation. Featuring for the first time, the Tripper (TM) upwards Dash with full map navigation, and a whole host of adventure ready features for your rides whether its a multi-week ride to the Himalayas or a 30 minutes ride through the city.

This is your capable, purpose-built and versatile machine built to explore the Himalayas and anywhere else your adventure takes you.

The new Royal Enfield Himalayan.

Built by the Himalayas

#AllRoadsNoRoads

– Team Royal Enfield

"© Copyright 2023 Royal Eneld (a unit Eicher Motors limited). All rights reserved. No part of this service manual shall be copied, distributed or otherwise dealt without the express permision in written form the Royal Enfield who remains the sole owner of this manual."

This page is intentionally left blank

TABLE OF CONTENTS

GENERAL INFORMATION 1

TECHNICAL SPECIFICATION 2

MAINTENANCE 3

GENERAL AND SPECIAL TOOLS 4

ENGINE 5

CHASSIS 6

FUEL SYSTEM 7

EVAPORATIVE EMISSION CONTROL SYSTEM (EVAP) 8

BRAKES AND ABS 9

ENGINE MANAGEMENT SYSTEM (EMS) 10

ELECTRICAL SYSTEM 11

INDEX AND GLOSSARY 12

CONTENTS

1. General Information 8

1.1 About this Manual 10

1.2 How to Use this Manual 10

1.3 Important Information 11

1.4 General Precautions 11

1.5 Prior to Service 11

2. Technical Specifications 22

2.1 Engine 24

2.2 Ignition System 24

2.3 Transmission 24

2.4 Chassis 24

2.5 Electrical System 25

2.6 Dimensions 25

2.7 Weights 25

2.8 Recommended Lubricants 25

3. Periodical Maintenance Schedule (PMS) 27

4. General and Special Tools 31

4.1 General Tools 33

4.2 Measurement Tools 35

4.3 Special Tools 37

5. ENGINE 43

5.1 Engine Removal from Main Frame 43

5.2 Engine Install to Main Frame 63

5.3 Engine Dismantling Procedure 90

5.4 Engine Inspection 124

5.5 Engine Assembly Procedure 134

5.6 Engine Cooling System 181

5.7 Valve Clearance Adjusting Procedure 207

5.8 Engine Troubleshooting 223

6. CHASSIS 244

6.1 Air Filter Box Assembly 244

6.2 Handlebar 254

6.3. Exhaust Pipes and Silencers 267

6.4. Footrests And Stands 278

6.5 Mudguards/Grab Handle 292

6.6 Side Panels and Rider Seat 311

CONTENTS

6.7 Wheels 327

6.8 Suspension. 351

6.9. Subframe 376

7. Fuel System.. 392

7.1. Fuel System Components 392

8. Evaporative (EVAP) Emission Control System 407

8.1. Evaporative (EVAP) Emission Control System 407

9. Brakes and ABS..... 416

9.1. Brake - Front 418

9.2. Brake - Rear..... 424

9.3 Anti-lock Braking System (ABS)..... 445

9.4. Preparation (Front Disc Brake)..... 466

9.5. Reassembly 469

9.6. Preparation (Rear Disc Brake)..... 469

9.7. Reassembly 470

9.8. Brake Bleeding 471

10. Engine Management System (EMS)..... 482

10.1 Engine Management System (EMS)..... 492

11. Electrical System..... 524

11. RE EOL 556

13 Index..... 564

GENERAL INFORMATION

CONTENTS

PAGE

1.1 About this Manual 10

1.2 How to Use this Manual 10

1.3 Important Information 11

1.4 General Precautions 11

1.5 Prior to Service 11

1. General Information

1.1 About this Manual

This service manual has been created primarily for use by a technically competent and trained service personnel to

- Get familiarized and understand the construction of various aggregates of motorcycles.
- Assist in carrying out the correct and factory-approved service and overhauling procedures of the motorcycles.

While it is not possible to comprehensively capture all the service practices in this manual, it is expected that the technically competent person would have a basic knowledge and understanding of carrying out systematic service and overhauling procedures.

We strongly recommend that personnel without basic understanding of repair techniques and procedures DO NOT attempt to service or overhaul any part of the motorcycle using this manual, as it might result in wrong diagnosis and repair and ultimately render the motorcycle unsafe for use and result in expensive repair costs for the customer.

We also STRONGLY recommend that any technician who wishes to service Royal Enfield motorcycles, undergo systematic technical trainings at our Royal Enfield training academies, where the correct servicing and overhauling procedures are imparted by experienced and competent trainers, providing hands on practical sessions.

Lastly, we would recommend and insist that the periodic maintenance and overhauling of the Royal Enfield motorcycles be carried out ONLY through authorized Royal Enfield service stations where factory trained and experienced service technicians are always available

1.2 How to Use this Manual

This service manual is divided into several chapters as detailed below. This will help the technical personnel to easily refer to the particular section of interest, for carrying out the correct maintenance and repair procedure as recommended by Royal Enfield.

Chapter No.	Chapters
1	**General Information**
2	**Technical Specifications**
3	**Periodic Maintenance Schedule**
4	**General Tools and Special Tools**
5	**Engine**
6	**Chassis**
7	**Fuel System**
8	**EVAP (Evaporative Emission Control System)**
9	**Brakes and ABS (Anti-Lock Braking System)**
10	**EMS (Engine Management System)**
11	**Electrical System**
12	**Index and Glossary**

There are elaborate details of CAUTIONS, WARNINGS provided in this service manual in each of the individual chapters to highlight details of information and/or precautions that need to be taken while servicing the motorcycle aggregates.

1.3 Important Information

To enhance customer satisfaction and to improve the performance of the motorcycle, Royal Enfield will carrying out modifications and changes in the motorcycles in the years to come. Such changes will be intimated periodically and continuously through service bulletins and notifications to the authorized Royal Enfield dealers and service stations and will also be included in the future editions of this service manual.

1.4 General Precautions

Important information and points that need special focus and attention while servicing the motorcycles are highlighted in this service manual as follows:

NOTE	*Indicates points of particular interest for more efficient and convenient operation.*
WARNING ⚠	**This warning symbol identifies special instructions or procedures which, if not correctly followed, could result in personal injury,or loss of life.**
CAUTION ⚠	**This caution symbol identifies special instructions or procedures which, if not strictly observed, could result in damage to the part or vehicle.**

⚠ WARNING

Stop the engine when servicing the fuel system. Do not smoke or allow any open flame or sparks near gasoline. Gasoline is extremely flammable and highly explosive, which could result in serious injury or fatal accidents.

Do not use after-market parts which can adversely affect the performance. Removing or altering factory-installed parts can adversely affect performance and could result in serious injury or fatal accidents.

⚠ CAUTION

Do not tamper or attempt any modifications to any part of the engine management, fuel injection, ABS brakes, exhaust and evaporative emission systems of the motorcycle as it is against the law and will render the motorcycle unfit and illegal for road use.

1.5 Prior to Service

Proper preparation is very important before commencing any maintenance or repair on a motorcycle. This will not only result in an efficient and accurate repair job but will also save time and result in "FIRST TIME RIGHT" and help the customer gain confidence in the technician's capability.

The following points are essential for carrying out maintenance or repairs on a motorcycle correctly:

1. **Understand and record customer concerns accurately.**
2. **Test-ride the motorcycle wherever required to understand the customer concerns accurately.**
3. **Refer to the past history of maintenance and repairs carried out on the motorcycle.**
4. **Water-wash and clean the motorcycle.**
5. **Maintain the work area – cleanliness, lighting, ventilation, etc.**
6. **Store appropriate general purpose and special tools for carrying out the maintenance.**
7. **Perform systematic dismantling and reassembly of the aggregates in the motorcycle.**
8. **Store required spares and consumables for the maintenance.**
9. **Perform correct inspection and diagnosis of the motorcycle.**
10. **Test-ride after repairs to ensure that motorcycle is performing correctly.**
11. **Explain the repairs and maintenance carried out to the customer.**
12. **Encourage customer to take a test-ride so as to gain confidence that the repairs have been carried out correctly and to his satisfaction.**

1.5.1. Customer Complaints

Discuss with customer to clearly understand their concerns and issues on the motorcycle. Create a job card detailing all the complaints mentioned.

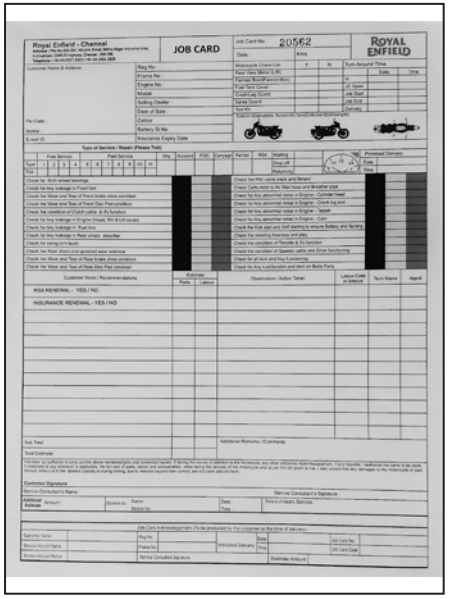

1.5.2. Test-Ride

Do a test ride wherever required to reconfirm issues mentioned by customer. This will also help to identify other issues if any.

1.5.3. Service Records

Check the service records.

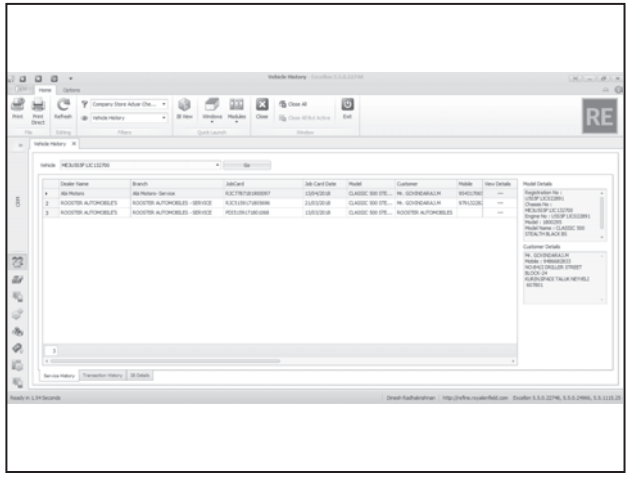

1.5.4. Clean Work Area

Ensure the work space is clean and adequately ventilated fresh air.

1.5.5. Cleaning

Cleaning before Dismantling and Inspection

Water-wash and clean the motorcycle for a thorough inspection to uncover any visual damages such as breakages, leaks, misalignments, etc., and to clearly understand the issues raised by the customer.

Clean the motorcycle thoroughly before disassembly to avoid dirt or other foreign materials entering into sealed areas as it can cause excessive wear and damage to the parts.

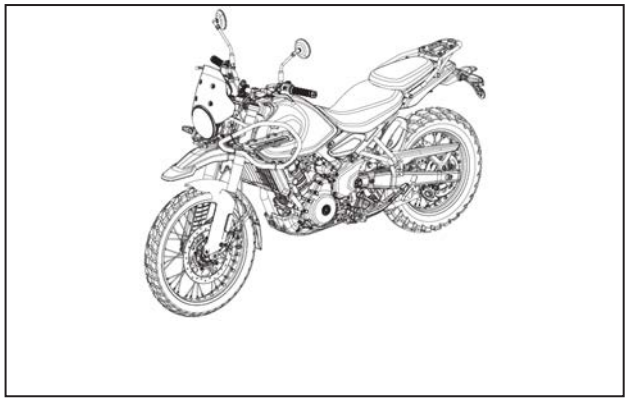

1.5.6. General and Special Tools

All general and special tools required for servicing are listed in the respective section of this service manual. Ensure that you have all the required tools for servicing. Place tools handy before beginning the service or maintenance.

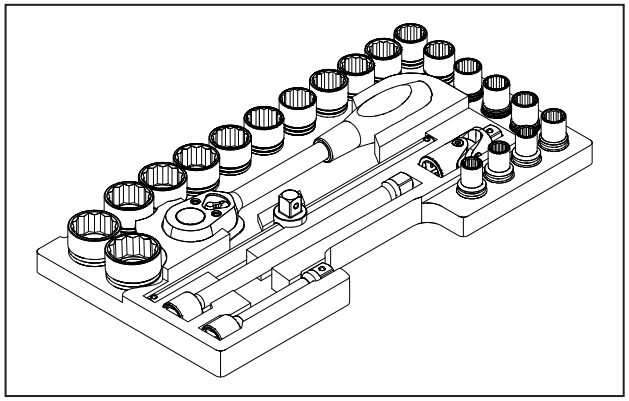

Special Tools

A list of special tools required for the dismantling and assembling of parts has been provided in each section.

Ensure that only Royal Enfield recommended special tools are used wherever mentioned. Dismantling or assembling without the use of special tools may cause severe, irreparable damage to parts.

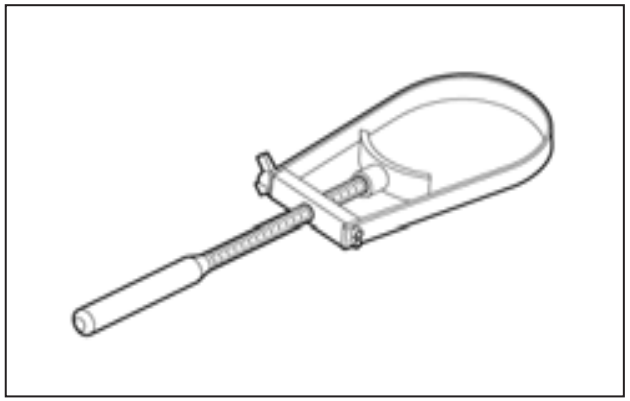

SPL	Part No: ST-32065/A
	Part Name: Magneto Holding Tool

Storing Tools

After completing the job, ensure that all tools are cleaned and kept back in their designated place, so that they do not rust and can be easily found the next time.

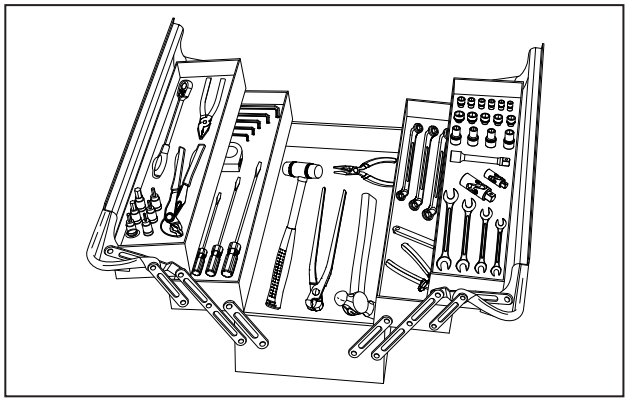

Tool Usage and Safety

Use eye protection equipment when performing any task using air-operated tools.

Pneumatic tools should be used only for removal, and not for tightening.

Ratchets and Extension

Use an extension on a ratchet's handle or power handle at suitable places.

Torque wrenches should always be used only for tightening fasteners to their recommended torque.

Once you hear the click sound, stop tightening and remove the torque wrench from the fastener. Do not tighten further as it will cause damage to torque wrench and fastener.

Hammers and Mallets

Use eye protection equipment and gloves while using a hammer.

Use a hammer or mallet that is suitable for the job.

Use only a plastic mallet to remove or assemble delicate parts like Oil seals/dowels/bushes, especially in the engine. DO NOT use a metal hammer as it will cause damage to the parts.

Screwdrivers

Use the right type and size of screwdriver at the right places.

Do not use a screwdriver for punching, chiseling or scraping, or as a lever to lift another object.

Use Ramp

Royal Enfield recommends the use of a suitable ramp to hold the motorcycle vertically in a convenient position for easy repairs.

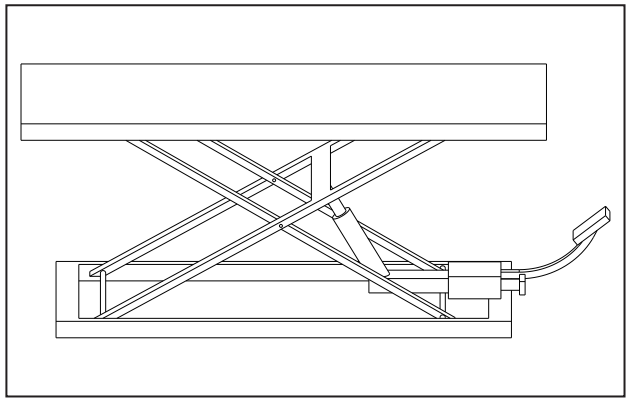

1.5.7 Prior to Disassembly

Always ensure ignition switch and stop switch are in OFF position before dismantling any aggregate on the motorcycle.

Always drain engine oil (in warm condition) whenever servicing any part of the engine/oil cooler.

Always drain fuel from the fuel tank whenever it is removed from the frame.

Always disconnect battery terminals whenever servicing the engine management system, ABS and/or any electrical wiring.

1.5.8. Disassembly/Assembly Sequence

Follow the disassembling and assembling sequence as given in the respective sections of this manual. In most cases assembly order is the reverse of disassembly. However, please follow the sequence provided in this service manual. If correct sequence is not followed, parts can be damaged.

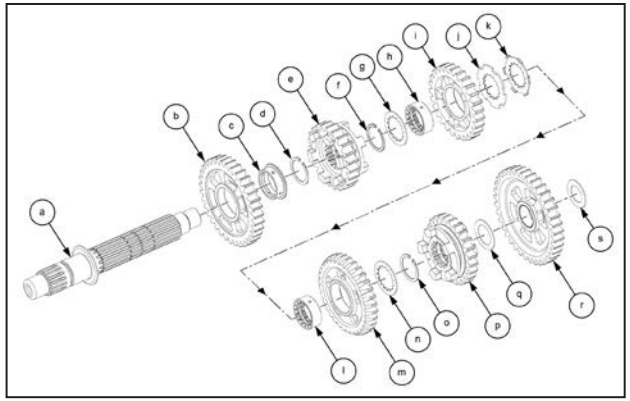

Removal of Bearings and Seals and fitting them in place

While removing bearings and seals, use correct tools mentioned in the relevant sections. Do not use excess force as it may damage parts. Similarly, while pressing bearings and seals in place lubricate them, use correct tools and visually examine if they are fitted in proper place. Bearings or seals should not be loose in the casing. Use of wrong tools, too much hammering or application of extra force may lead to damage of the bearings and seals.

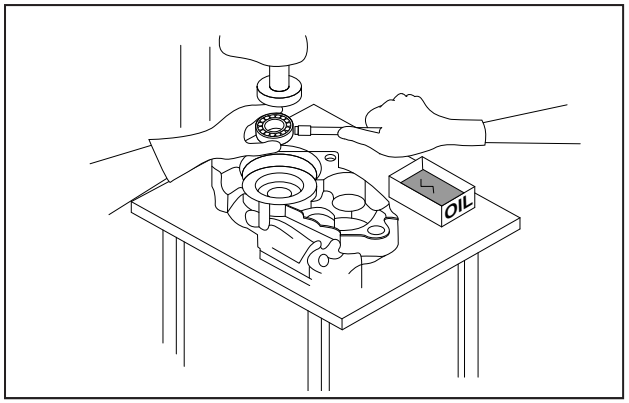

Lubrication

During assembly, ensure that all rotating and/or sliding parts are lubricated to minimize wear and tear during initial operation. Use Royal Enfield recommended oil and lubricants only. All brake system parts should be cleaned and lubricated with recommended brake fluid only (e.g., piston, MC, etc.).

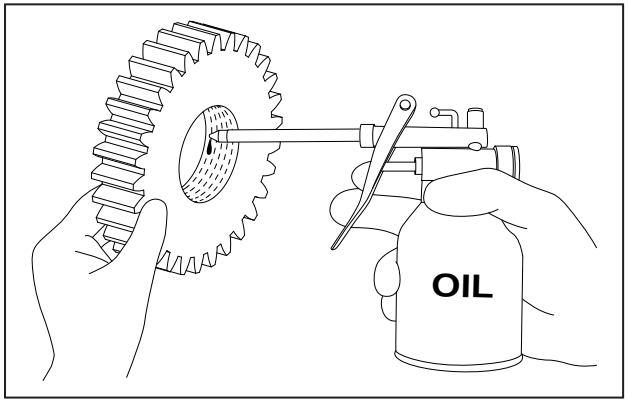

Tightening Sequence and Torque

The correct tightening sequence and torque has been provided in various sections of this service manual. Incorrect sequence or wrong torque will cause serious damage to parts.

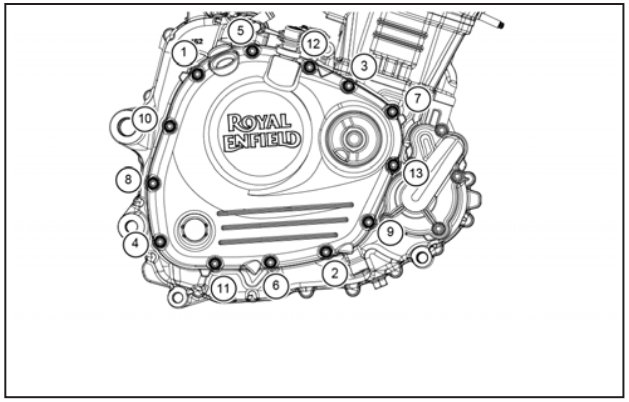

Battery Disconnection and Connection

When required, disconnect the battery cables from the battery. Disconnect the ground negative (–) terminal first and then positive (+) terminal to avoid short circuit. While connecting, first connect the positive (+) and then the negative (–) terminals.

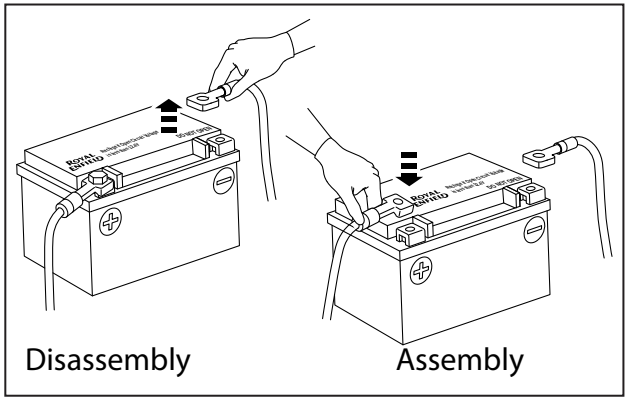

Electrical Connectors

Ensure that lock is released in the connectors before disconnecting or connecting electrical connectors. Excessive force to pull out connectors without releasing the lock may damage the connector.

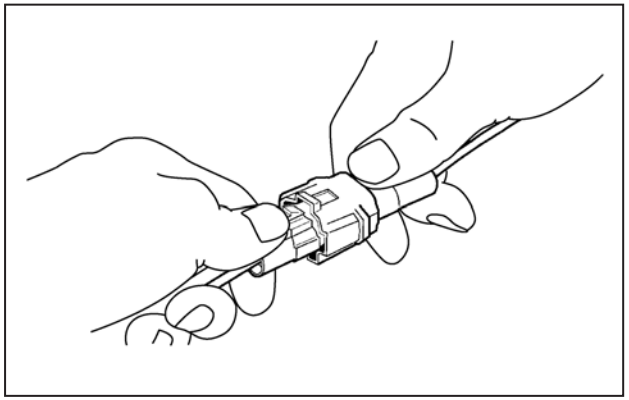

1.5.9. Safety

Ignition System

Ignition system produces high voltage. When working on any ignition system with the engine running, always keep your hands away from the spark plug wires.

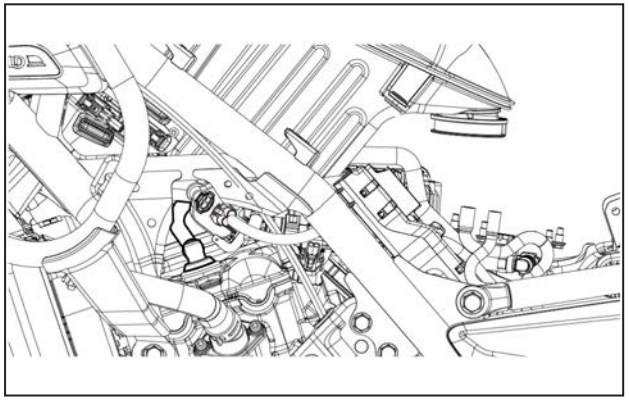

Handling Sharp-edged Parts

Wear hand gloves to prevent injury from possible sharp edges on the parts.

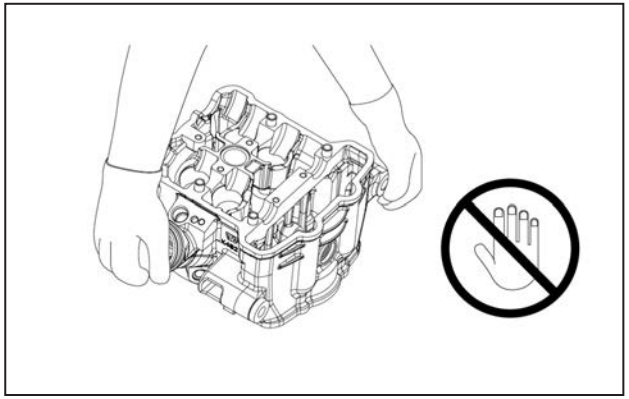

Handling Fragile Parts

Be careful while handling fragile parts like headlamp, indicator, bulb, TFT cluster,etc. Use proper tools and do not apply undue force. After removing, store the parts in a safe place.

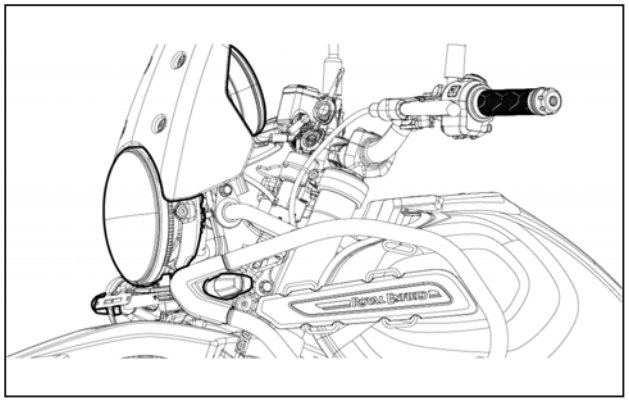

Welding

Royal Enfield does not recommend welding on the frame or any other parts of the motorcycle. Welding will make the frame weak and can also affect the balance of the motorcycle.

In motorcycles equipped with electronic control modules like EMS and ABS, welding will cause irreparable damage to the EMS/ABS system.

This will also void motorcycle warranty.

Tampering

It is illegal to tamper with the following:

a) Exhaust system
b) Fuel systems
c) Engine Number and/or VIN Information Plate
d) Wiring harness
e) Frame

This will lead to NON CONFORMANCE to the noise and emission regulations in force, causing serious performance issues besides irreparable damage to the motorcycle.

This will also void warranty of the motorcycle.

1.5.10 Storage of Removed Parts

After disassembly of all parts including sub-assemblies, clean and store them in a separate storage bin to prevent from dust and place the parts near the working area.

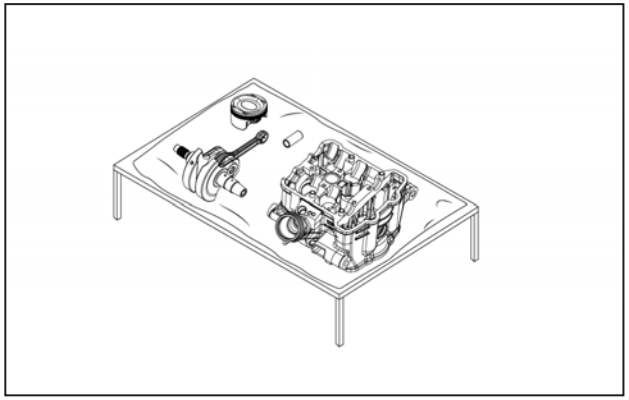

Protective Covers

Use proper covers on the motorcycle to avoid scratching/damaging paint during service.

⚠ CAUTION
Please Take care while disassembling and assembling the seats, and sheet metal parts, as any sharp edges will lead to injuries.

1.5.11 Inspection

Reuse of worn or damaged parts may lead to serious malfunction and/or unsafe operation of the motorcycle. All removed parts should be cleaned and visually inspected for wear-out, corrosion, discoloration, damage, etc. Refer to the appropriate sections of this manual for service limits on individual parts. If any wear or tear has been found or if the part is beyond its service limit, replace the parts with Royal Enfield Genuine parts.

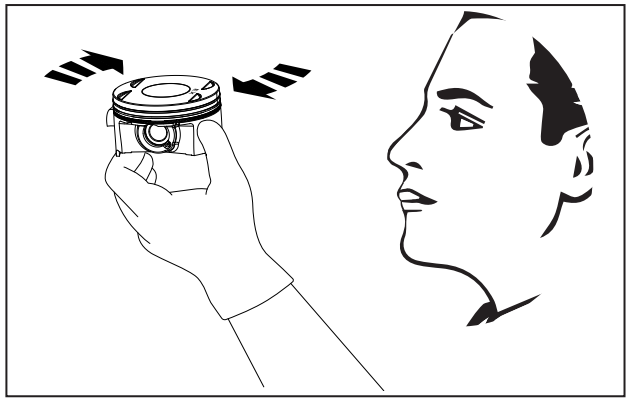

1.5.12 General

One-time Parts/Consumables

In the service manual, we have listed parts that are for one-time use only. Replace and do not reuse parts such as:

a) Oil seals
b) Filters
c) Gaskets
d) Rubber washers
e) Cylinder head bolts
f) Connecting rod bolts
g) Crankcase bolts
h) O - Rings

Spares/Lubricants/Consumables

Ensure that you have all the spares/lubricants/ consumables required for the servicing of a particular section stored near you for easy access. Use only Royal Enfield Genuine parts.

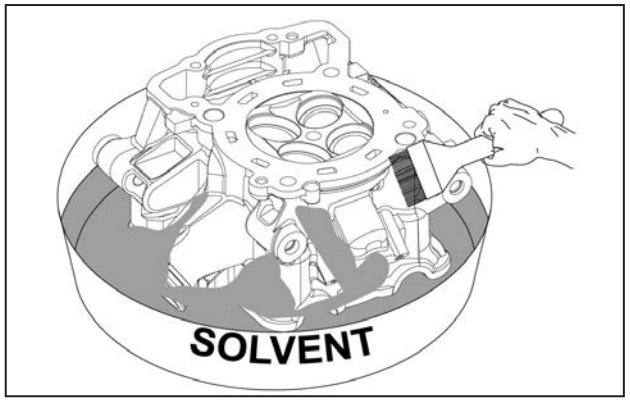

Rust or Corrosion Removal

In case a rusted or corroded part cannot be removed, apply recommended/reputed rust removal agents, wait for the removal agent to free up the rust/corrosion and then remove the part. Clean and inspect the part carefully to confirm it can be reused.

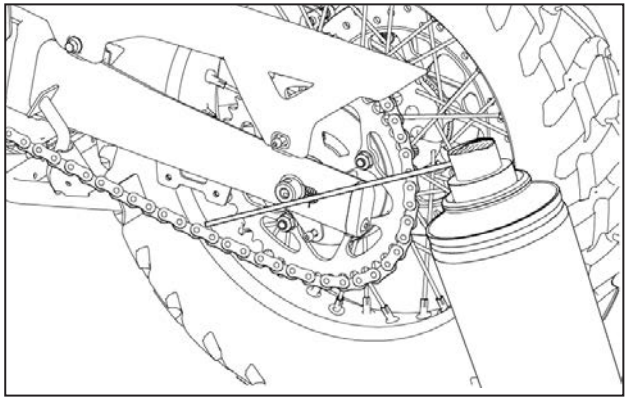

Solvents/Oils for Cleaning

Use correct solvents for cleaning to reduce fire hazards.

Hazardous Substances

Many liquids and other substances like fuel, lubricants, brake oil, adhesives, etc., used in automobiles are poisonous. Keep the fluids out of reach of children. Do not bring in contact with eyes and skin. Wash exposed skin thoroughly with soap and water. If any irritation persists, consult a doctor immediately.

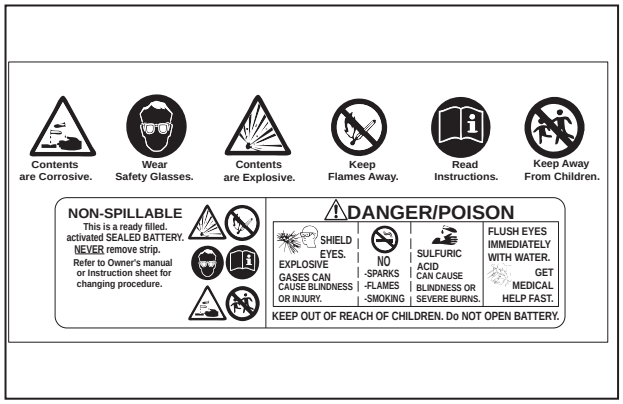

Environmental Protection

Dispose used oil and other consumables like gaskets, O-rings, oil filters through authorized waste-disposal agencies.

Do not spill brake oil on painted parts. It will damage the paint.

Do not use mineral-based grease in brake parts as it will damage the hydraulic seals.

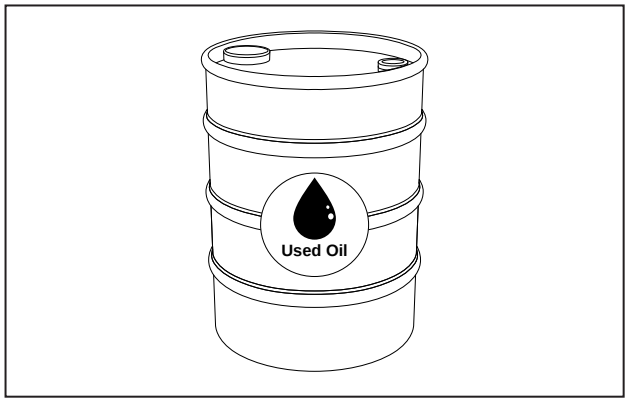

Battery Acid

Avoid spilling battery acid on any part of the motorcycle or your body. Wash spillage immediately with water to avoid acid marks on the motorcycle or burns/injury to yourself.

Gasoline/Petrol

Gasoline/Petrol is highly flammable. Be careful while removing the fuel tank and handling Gasoline/Petrol. Store it in a safe place and ensure it is stored in a well ventilated area, away from the work area and fire.

After-market Parts and Accessories

Royal Enfield strongly recommends use of Royal Enfield genuine parts and accessories only.

A list of all accessories available from Royal Enfield can be obtained from Royal Enfield dealers.

Yet, if you are using any after-market part that is not supplied by Royal Enfield, do ensure that it does not interfere with the functioning of any of the motorcycle parts.

Gasket and O-ring

If the gaskets and O-rings are hardened, shrunk or damaged after disassembly, their sealing performance will be reduced.

Remove used gaskets and O-rings. Clean the sealing surfaces thoroughly. Make sure no gasket or other material waste remains on the surface.

Always replace recommended gaskets and O-rings with Royal Enfield genuine parts once they are removed.

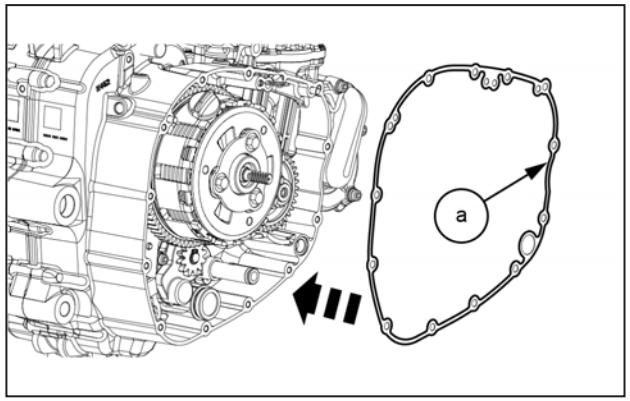

1.5.13 Final Inspection

Once the repairs/servicing is done, check and confirm that all tasks mentioned on the job card have been performed. Do a proper testing to ensure that all critical functions are working properly, all reported issues have been resolved and no new problem has been introduced.

Follow the final inspection checklist and sign out through the final inspector.

1.5.14 Delivery to the Customer

Ensure that the customer is informed about all the repairs that have been carried out. Also let he/she know about the parts that have been replaced and consumed during the repairs. Demonstrate to the customer that all his/her reported issues have been resolved. Insist on a test ride if required.

Please preserve the parts. Show it to the customer and dispose it with the customer's permission.

TECHNICAL SPECIFICATIONS

CONTENTS PAGE

2 Technical Specifications 25

2.1 Engine..... 25

2.2 Ignition System..... 25

2.3 Transmission..... 25

2.4 Chassis..... 25

2.5 Electrical System..... 26

2.6 Dimensions..... 26

2.7 Weight..... 26

2.8 Recommended Lubricants..... 26

2.1 Technical Specifications

2.1 Engine	
Engine Type	Single cylinder, 4 stroke, DOHC, SI Engine, Water cooled, Fuel Injection
Bore	84 mm
Stroke	81.5 mm
Swept Volume	452 cc
No of Valves	4 Nos
Compression Ratio	11.5:1
Max Power	29.44 kW (40.02 PS) @ 8000 rpm
Max Torque	40 Nm @ 5500 rpm
Idle RPM	1300 rpm
Starting	Electric start
Air Filter Element	Paper element
Cooling	Water cooled
Lubrication	Semi-dry sump
Engine Oil Tank Capacity	1 st dry fill: 2.4 L / 0.52 Imperial gallon
	Refill: 2.1 L / 0.46 Imperial gallon - for oil service (Including filter change)
Engine oil grade	10W40 API SN, JASO MA2, Semi Synthetic

2.2 Ignition System	
Ignition	ECU controlled
Spark Plug	Champion
Spark Plug Gap	0.8 mm to 0.9 mm

2.3 Transmission	
Clutch	Wet multi plate, slip and assist
Primary Drive	Gear
Primary Ratio	2.028:1
Gear Box	6 Speed
Gear Ratio	1st 3.083 :1 2nd 2.059:1 3rd 1.600:1 4th 1.286:1 5th 1.087:1 6th 0.958:1
Secondary Drive	Sprockets and chain (5/8 Pitch)
Secondary Ratio	3.133:1

2.4 Chassis	
Frame	Steel, twin spar tubular frame
Suspension	
Front	Upside down fork, 43 mm, front wheel travel 200 mm
Rear	Linkage type mono-shock, rear wheel travel 200 mm
Brakes	
Front disc	Hydraulic disc brake, 320 mm ventilated disc, double piston caliper
Rear disc	Hydraulic disc brake, 270 mm ventilated disc, single piston caliper
Brake system	Dual channel ABS, Switchable
Brake Fluid	DOT 4* Front: 90 ± 5 ml Rear: 80 ± 5 ml
* Do not mix DOT 4 or other brake fluid together.	
Tyre Size	
Front (Spokes wheel)	90/90-21 M/C 54H CEAT (Gripp RE F)
Rear (Spokes wheel)	140/80R17 M/C 69H CEAT (Gripp Rad steel RE)
Tyre Pressure	
Solo	Front - 32 psi/ 2.24 kg/cm^2
	Rear - 32 psi/ 2.24 kg/cm^2
With Pillion	Front - 32 psi/ 2.24 kg/cm^2
	Rear - 32 psi/ 2.24 kg/cm^2

Note:
- On tube type rim, fit the tyre with a tube.
- On tubeless type rim, use tubeless type tyre only.

Steering Lock	Inbuilt
Fuel type	Unleaded gasoline
Fuel tank capacity	17.0* L / 3.73 Imperial gallon
Induction	Electronic fuel injection, 42 mm throttle body, ride by wire system
Low fuel warning	3 L ± 0.5* L / 0.65 ± 0.10 Imperial gallon
Dead stock	0.95 L to 1.15* L / 0.20 to 0.25 Imperial gallon
*The above values are approximate and the actual fuel filling capacity will vary from the values mentioned.	

2.5 Electrical System	
System	12 V - DC
Generation	Alternator, III Phase
Alternator Output	280 W @ 1200 rpm
Battery	12 V - 8 Ah VRLA
Headlamp	12 V, FPL 1.5 W LED, low beam 12.12 W, high beam + low beam 14.22 W
Brake Lamp	12 V, 1.4 W
Turn Signal	Front - 12 V, 2 W x 1 no Rear - 12 V, 4.2 W x 1 no
Tail Lamp	12 V, 0.31 W

Instrument Cluster	Colour TFT (Thin Film Transistor)
Horn	12 V, 2.5 A
Starter Motor	12 V - 0.7 kW
Charger Port	USB 2.0 Type C - 5 V, 2 A output
License plate illuminator	12 V - LED
Hazard warning	Front - 12 V, 2 W x 2 nos Rear - 12 V, 4.2 W x 2 nos

⚠ WARNING

Using bulbs/electrical gadgets other than specified rating may lead to over loading/ erratic behavior/premature failure of electrical system.

Modifications or fitments which are not approved by Royal Enfield, will seriously affect the performance of the vehicle and will render the warranty void.

2.6 Dimensions	
Length	2285 mm
Width	852 mm
Standard seat height	Adjustable 825 mm to 845 mm
Low seat height	Adjustable 805 mm to 825 mm
Height	1316 mm
Wheel base	1510 mm
Ground clearance	230 mm

2.7 Weights	
Kerb weight (Without accessories)	195 kg
Gross vehicle weight (Without accessories)	394 kg

NOTE

- Values / Dimensions given above are for your guidance only.
- In view of continuous improvements being done on our products, the specifications are likely to change without prior notice.
- Do not use the vehicle beyond the allowed gross weight. The suspensions and tyres are designed to perform only to the maximum gross vehicle weight.

2.8 Recommended Lubricants		
Engine Oil	Grade	10W40 API SN, JASO MA2, Semi Synthetic
	Capacity	1st Dry fill: 2.4 L / 0.52 Imperial gallon. Refill: 2.1 L / 0.46 Imperial gallon - for oil service (Including filter change)

Front Fork Oil	Grade	SS-47G
	Capacity	**RH fork:** 589 ± 2.5 ml **LH fork:** 507 ± 2.5 ml
Brake Fluid	Grade	DOT 4*
	Capacity	**Front:** 90 ± 5 ml **Rear:** 80 ± 5 ml
* Do not mix DOT 4 or other brake fluid together.		
Coolant	Grade	TOTAL COOLELF AUTO SUPRA -37 ºC
	Capacity	**Radiator:** Dry fill: 915 ml Service fill: 815 ml **Expansion Tank:** Fill to max mark: 240 ml

NOTE
• Coolant from Total is ready to use and does not require mixing. • Recommendation subject to change without notice. • The above values are approximate and the actual capacity will vary.

⚠ **CAUTION**
Use of wrong grade oil will reduce the life of the moving parts and seriously affect performance.

PERIODIC MAINTENANCE SERVICE

Applicable markets: Europe,

UK and North America & Canada

PERIODIC MAINTENANCE

The maintenance schedule detailed here will help you to maintain your Himalayan motorcycle meticulously to get along trouble free service. The schedule provided herein is based upon an average riding conditions and indicates the km at which regular inspections, adjustments, replacements and lubrications are to be carried out. The frequency of the maintenance must be shortened depending upon the severity of the driving condition or if the motorcycle is used in a very dust environment. Contact the nearest Royal Enfield Authorised Service Centre for expert advice and to carry out the required maintenance.

S.No	DESCRIPTION	PERIODIC MAINTENANCE (Whichever is earlier)					
	km (x 1,000)	**0.5**	**10**	**20**	**30**	**40**	**50**
	miles (x 1,000)	**0.3**	**6**	**12**	**18**	**24**	**30**
	Months	**1.5**	**12**	**24**	**36**	**48**	**60**
1.	Engine oil	R	R	R	R	R	R
		Check oil level every 1000 km (or earlier as required) and top up as required					
2.	Engine oil filter	R	R	R	R	R	R
3.	Inlet and exhaust valve clearance		I&A	I&A		I&A	
4.	Spark plug			I		R	
5.	HT lead		I	I	I	I	I
6.	Rubber hose, air filter to throttle body		I	I	I	I	I
7.	Rubber hose, inlet manifold / adapter		I	I	I	I	I
8.	Evaporative emission equipment rubber hoses		I	I	I	I	I
9.	Air filter element with O Ring on Cover		R	R	R	R	R
		Clean / Replace more frequently if operated in dusty condition					
10.	Vent pipe under air filter box		I	I	I	I	I

PERIODIC MAINTENANCE

S.NO	DESCRIPTION	PERIODIC MAINTENANCE (Whichever is earlier)					
	km (x 1,000)	0.5	10	20	30	40	50
	miles (x 1,000)	0.3	6	12	18	24	30
	Months	1.5	12	24	36	48	60
11.	Coolant	I	I	I	R	I	I
12.	Fuel pump (under tank) mounting		I	I	I	I	I
13	Fuel pump strainer				R		
14.	Throttle body					C	
		Throttle body should be removed from the vehicle and cleaned with a dry microfiber cloth. Usage of throttle body cleaners or any similar solvent or alcohol based liquids for cleaning is strictly prohibited. Throttle body cleaning every 40000 km or 48 months whichever is earlier as required.					
15.	Clutch cable / lever free play	I	I	I	I	I	I
		Adjust every 1000 km (or earlier as required)					
16.	Clutch lever & front brake lever pivots	L	L	L	L	L	L
		Lubricate every 1000 km (or earlier as required)					
17.	Brake pads - front & rear	I	I	I	I	I	I
18.	Brake fluid - front & rear	I	I	R	I	R	I
19.	Rear brake pedal pivot	L	L	L	L	L	L
20.	Brake hose and banjo bolt - front & rear	I	I	I	I	I	I
21.	Steering movement	I	I	I	I	I	I

PERIODIC MAINTENANCE

S.No	DESCRIPTION	PERIODIC MAINTENANCE (Whichever is earlier)					
	km (x 1,000)	**0.5**	**10**	**20**	**30**	**40**	**50**
	miles (x 1,000)	**0.3**	**6**	**12**	**18**	**24**	**30**
	Months	**1.5**	**12**	**24**	**36**	**48**	**60**
22.	Rear wheel drive chain	I	I	I	I	I	I
		Clean, Lubricate and Adjust every 500 km (or earlier as required), or after riding in wet/dusty/muddy conditions					
23.	Rear wheel cush rubbers			I		I	
24	Battery terminals (apply petroleum jelly)	I	I	I	I	I	I
25.	Earth wire eyelet tightness		I	I	I	I	I
26.	Tyre wear pattern front & rear	I	I	I	I	I	I
27.	Side stand & centre stand pivots	L	L	L	L	L	L
28.	Rider & pillion footrest pivots	L	L	L	L	L	L
29.	Engine Mount, Swing arm, Front & Rear Wheel Spindle, T Stem Pinch bolts, Rear Sub Frame Mounting Bolts, Rear linkage	I	I	I	I	I	I
30.	Spoke Tightness & Check for runout/ faceout of rims	I	I	I	I	I	I

A : Adjust C : Clean I : Inspect (Clean, Adjust, Lubricate or replace if necessary) L : Lubricate R : Replace

NOTE

For maintenance after 50,000 km (31068.56 miles), please repeat the same frequency specified above, in consultation with a Royal Enfield Authorised Dealer / Service Centre.

PERIODIC MAINTENANCE SERVICE

Applicable markets: Other than Europe, UK and North America & Canada.

PERIODIC MAINTENANCE

The maintenance schedule detailed here will help you to maintain your Himalayan motorcycle meticulously to get along trouble free service. The schedule provided herein is based upon an average riding conditions and indicates the km at which regular inspections, adjustments, replacements and lubrications are to be carried out. The frequency of the maintenance must be shortened depending upon the severity of the driving condition or if the motorcycle is used in a very dust environment. Contact the nearest Royal Enfield Authorised Service Centre for expert advice and to carry out the required maintenance.

S.No	DESCRIPTION	PERIODIC MAINTENANCE (Whichever is earlier)										
	km (x 1,000)	**0.5**	**5**	**10**	**15**	**20**	**25**	**30**	**35**	**40**	**45**	**50**
	miles (x 1,000)	**0.3**	**3**	**6**	**9**	**12**	**15**	**18**	**21**	**24**	**27**	**30**
	Months	**1.5**	**6**	**12**	**18**	**24**	**30**	**36**	**42**	**48**	**54**	**60**
1.	Engine oil	R	I	R	I	R	I	R	I	R	I	R
		Check oil level every 1000 km (or earlier as required) and top up as required										
2.	Engine oil filter	R		R		R		R		R		R
3.	Inlet and exhaust valve clearance			I&A		I&A				I&A		
4.	Spark plug					I				R		
5.	HT lead			I		I		I		I		I
6.	Rubber hose, air filter to throttle body			I		I		I		I		I
7.	Rubber hose, inlet manifold / adapter			I		I		I		I		I
8.	Evaporative emission equipment rubber hoses			I		I		I		I		I
9.	Air filter element with O Ring on Cover			R		R		R		R		R
		Clean / Replace more frequently if operated in dusty condition										
10.	Vent pipe under air filter box			I		I		I		I		I

PERIODIC MAINTENANCE

S.NO	DESCRIPTION	PERIODIC MAINTENANCE (Whichever is earlier)										
	km (x 1,000)	0.5	5	10	15	20	25	30	35	40	45	50
	miles (x 1,000)	0.3	3	6	9	12	15	18	21	24	27	30
	Months	1.5	6	12	18	24	30	36	42	48	54	60
11.	Coolant	I	I	I	I	I	I	R	I	I	I	I
		Check coolant level in expansion tank every 1000 km (or earlier as required) and top up as required										
12.	Fuel pump (under tank) mounting			I		I		I		I		I
13	Fuel pump strainer							R				
14.	Throttle body	Throttle body should be removed from the vehicle and cleaned with a dry microfibre cloth. Usage of throttle body cleaners or any similar solvent or alcohol based liquids for cleaning is strictly prohibited. Throttle body cleaning every 40000 km or 48 months whichever is earlier as required.										
15.	Clutch cable / lever free play	I	I	I	I	I	I	I	I	I	I	I
		Adjust every 1000 km (or earlier as required)										
16.	Clutch lever & front brake lever pivots	L	L	L	L	L	L	L	L	L	L	L
		Lubricate every 1000 km (or earlier as required)										
17.	Brake pads - front & rear	I	I	I	I	I	I	I	I	I	I	I
18.	Brake fluid - front & rear	I	I	I	I	R	I	I	I	R	I	I
19.	Rear brake pedal pivot	L	L	L	L	L	L	L	L	L	L	L
20.	Brake hose and banjo bolt - front & rear	I		I		I		I		I		I
21.	Steering movement	I	I	I	I	I	I	I	I	I	I	I

PERIODIC MAINTENANCE

S.No	DESCRIPTION	PERIODIC MAINTENANCE (Whichever is earlier)										
	km (x 1,000)	0.5	5	10	15	20	25	30	35	40	45	50
	miles (x 1,000)	0.3	3	6	9	12	15	18	21	24	27	30
	Months	1.5	6	12	18	24	30	36	42	48	54	60
22.	Rear wheel drive chain	I	I	I	I	I	I	I	I	I	I	I
		Clean, Lubricate and Adjust every 500 km (or earlier as required), or after riding in wet/dusty/ muddy conditions										
23.	Rear wheel cush rubbers					I				I		
24	Battery terminals (apply petroleum jelly)	I	I	I	I	I	I	I	I	I	I	I
25.	Earth wire eyelet tightness			I		I		I		I		I
26.	Tyre wear pattern front & rear	I	I	I	I	I	I	I	I	I	I	I
27.	Side stand & centre stand pivots	L	L	L	L	L	L	L	L	L	L	L
28.	Rider & pillion footrest pivots	L	L	L	L	L	L	L	L	L	L	L
29.	Engine Mount, Swing arm, Front & Rear Wheel Spindle, T Stem Pinch bolts, Rear Sub Frame Mounting Bolts, Rear linkage	I	I	I	I	I	I	I	I	I	I	I
30.	Spoke Tightness & Check for runout/ faceout of rims	I	I	I	I	I	I	I	I	I	I	I

A : Adjust C : Clean I : Inspect (Clean, Adjust, Lubricate or replace if necessary) L : Lubricate R : Replace

NOTE

For maintenance after 50,000 km (31068.56 miles), please repeat the same frequency specified above, in consultation with a Royal Enfield Authorised Dealer / Service Centre.

GENERAL AND SPECIAL TOOLS

CONTENTS

PAGE

4. General and Special Tools 32

4.1 General Tools 34

4.2 Measurement Tools 36

4.3 Special Tools 37

4.3.1. Engine 38

4.3.2. Vehicle 41

4. General and Special Tools

4.1 General Tools

Sl. No.	Size	Part Description	Illustration
1	100 - 225mm	Screwdriver	
2	100 - 225mm	Screwdriver Phillips	
3	T20	Screwdriver (Torx)	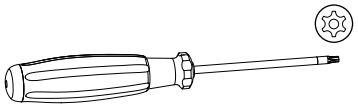
4	C-Spanner		
5	Extension tube		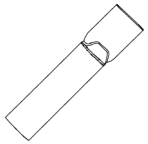
6	6-7 to 26-27mm	Spanner (Double End/ Open End)	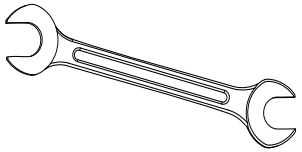
7	6-7 to 24-27mm	Spanner (Ring)	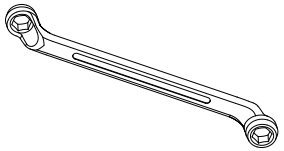
8	Hammer		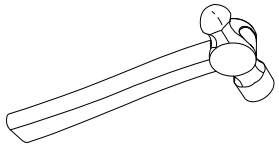
9	Plastic Hammer		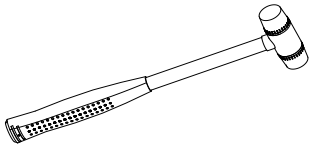
10	Mallet		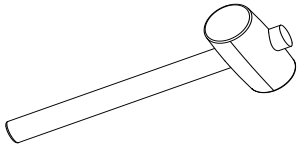
11	Tommy Bar		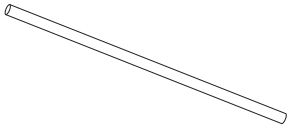

Sl. No.	Size	Part Description	Illustration
12	3 - 6mm	Allen Key	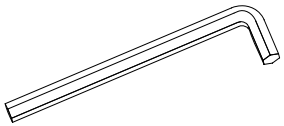
13	3 - 6mm	Allen Socket	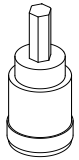
14	8 to 32mm	Hex Socket	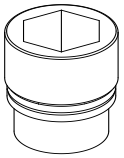
15	8 to 32mm	Bi-hexagonal	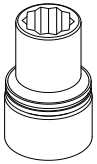
16	5 & 10	Extension	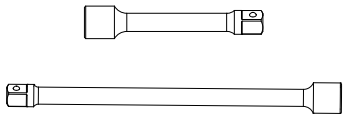
17	T20 & T60	Torx Socket	

Sl. No.	Size	Part Description	Illustration
18	Ratchet		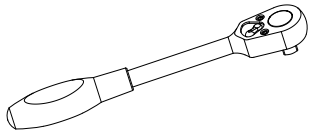
19	T-handle		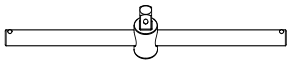
20	1 - 70N-m & 25 - 135N-m	Torque Wrench	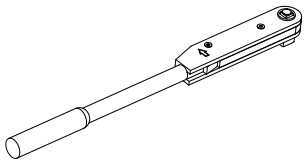
21	Cutting Plier		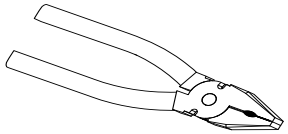
22	Nose Plier		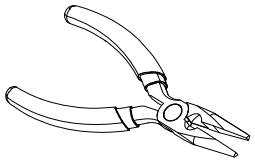
23	Circlip Plier		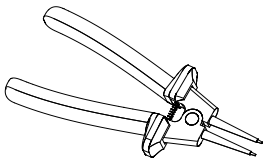

Sl. No.	Size	Part Description	Illustration
24	Adjustable Plier		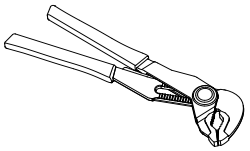
25	Scissor Jack		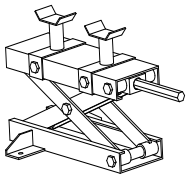
26	V-block		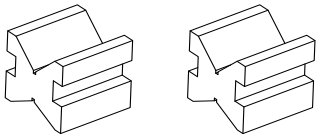
27	Front spindle adapter		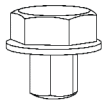
28	Ring spanner 24 x 14 combination		
29	Air filter Clamp Removal and install tool		

4.2 Measurement Tools

Sl. No.	Size	Part Description	Illustration
1	Vernier Caliper (or)Digital Caliper		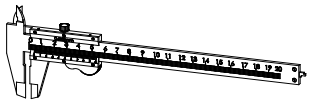
2	0 - 25mm, 25 - 50mm, 50 - 75mm, 75 - 100mm	Micrometer (or) Digital Caliper	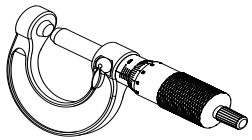
3	Bore Gauge		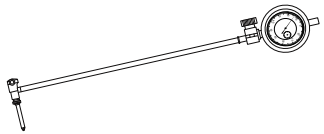
4	Dial Gauge with Magnetic Stand		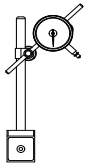
5	Tyre Depth Gauge		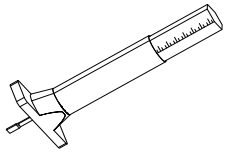
6	30 cm (12 inches)	Steel Ruler	

Sl. No.	Size	Part Description	Illustration
7	Feeler Gauge		
8	Multimeter		
9	DOL Tool		
10	Measuring Tape		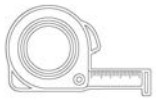

SPECIAL TOOLS

4.3 Special Tools

4.3.1 Engine

Sl. No.	Part Number	Part Description	Illustration
1	ST32062/A	Crank TDC locking tool	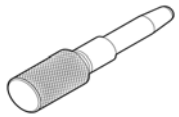
2	ST32061/A	Cam TDC locking tool	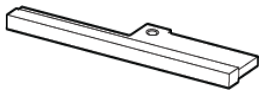
3	ST32064/A	Engine Mount Bracket and Fixture	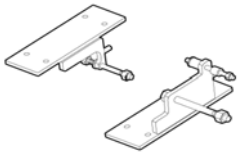
4	ST32065/A	Magneto Holding Tool	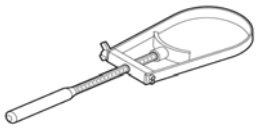
5	ST32068/A	Coolant Pump Oil Seal Assembly Tool	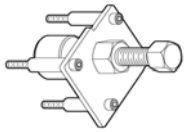
6	ST32069/A	Fd Sprocket Holding Tool	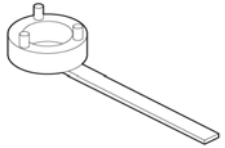
7	ST32070/A	Nylon Rod (This tool used for pushing cam chain tensioner arm back to release the HMT (hydro mechanical tensioner) from the transit position.)	
8	ST30274/a	Magneto Puller Assembly	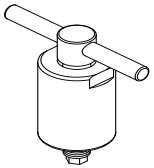
9	ST275332	Crank Gears Locking Tool	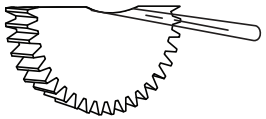
10	ST30266/a	Clutch Holder	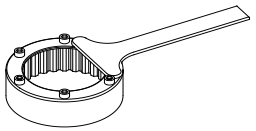

Sl. No.	Part Number	Part Description	Illustration
11	ST-27562-1	Angular Torque Wrench	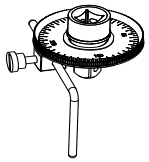
12	ST30264/a	Clutch Activating Shaft Oil Seal Installer	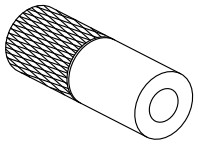
13	ST30262/a	Clutch Activating Lever Top Bearing Installer	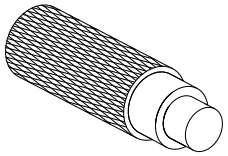
14	ST30265/a	Clutch Activating Shaft Top Bearing Puller	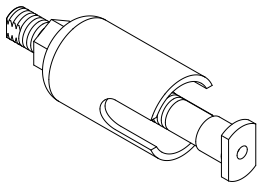
15	ST30271/a	Gear Shifter Shaft NRB and Oil Seal Installer	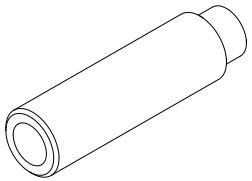

Sl. No.	Part Number	Part Description	Illustration
16	ST30261/a	Clutch Activating Lever Bottom Bearing Installer	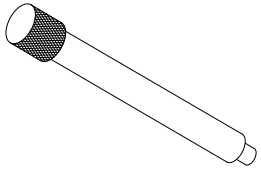
17	ST30263/a	Clutch Act Shaft Bottom Bearing Puller	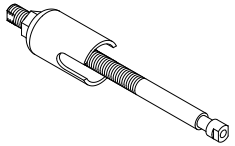
18	ST30270/a	Gear Shifter Drum NRB Installer	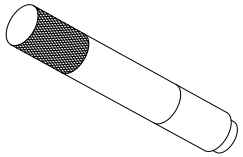
19	ST-27529-2	Connecting rod holder	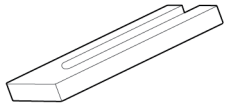
20	ST-32067-a	Engine Mount Fixture Support Plate	

Sl. No.	Part Number	Part Description	Illustration
21	ST-27528-2	Valve Spring Compressor	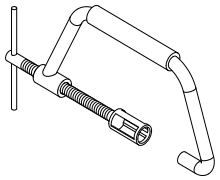

4.3.2 Vehicle

Sl. No.	Part Number	Part Description	Illustration
1	ST-31889/A ST-32157/A	T-STEM Taper Roller Bearing Remover	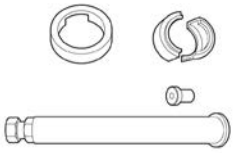
2	ST-32156/A	Headstock Bearing Race Installer Adapter	
3	ST-32158/A	Swingarm NRB Installer Tool	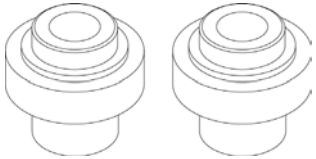
4	ST-31893/A	T STEM Taper Roller Bearing Installer	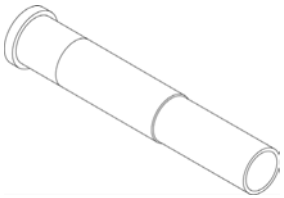
5	ST-31894/A	Common Screw Rod For Head Stock Ball Race Installer	

Sl. No.	Part Number	Part Description	Illustration
6	ST-31895/A	Swing Arm NRB Bearing Remover Tool	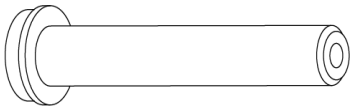
7	ST-32159/A	Frame Adjuster K Engine	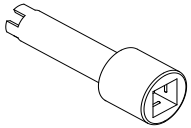
8	ST-32160/A	Frame Adjuster Swing arm	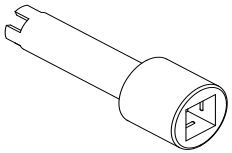
9	ST-32155/A	Headstock Bearing Race Removal Tool	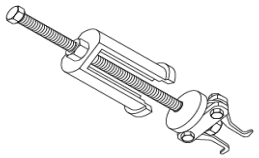
10	ST-31895/A	Swing Arm NRB Bearing Remover Tool	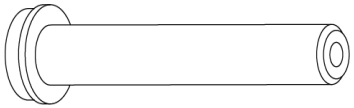

Sl. No.	Part Number	Part Description	Illustration
11	ST-32159/A	Frame Adjuster K Engine	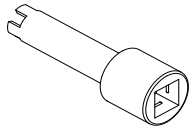
12	ST-32160/A	Frame Adjuster Swing arm	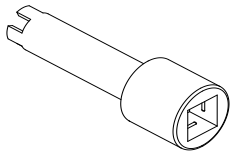
13	ST-32155/A	Headstock Bearing Race Removal Tool	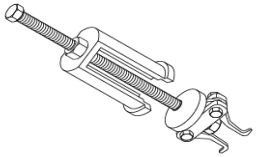
14	ST-31894/A ST-32156/A	Head Stock Ball Race Installer tool full assembled view	
15	ST-30969/A	Steering stem nut adjuster	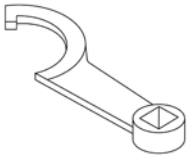

ENGINE REMOVAL FROM MAIN FRAME

CONTENTS PAGE

5.1 Engine Removal from Main Frame.....46

5.1.1. Pillion Seat.....46

5.1.2. Rider Seat.....46

5.1.3 Disconnect Battery Terminal.....47

5.1.4 Fuel System 47

5.1.5. Side Panel LH.....49

5.1.6 Sump Guard.....49

5.1.7 Coolant Drain.....50

5.1.8 . Drain Plug 51

5.1.9 . Gear Pedal 52

5.1.10. Air Filter Box Assembly 52

5.1.11. Radiator 53

5.1.12. Sensor / Oxygen Sensor Connector(Front) 55

5.1.13. Exhaust Pipe 56

5.1.14 Wiring harness bracket 57

5.1.15 Canister 57

5.1.16. EMS Throttle Body 58

5.1.17. Fuel Injector connector.....58

5.1.18. Oil pressure switch connector.....58

5.1.19. Engine Coolant Temperature Sensor 59

5.1.20. RR Unit 59

5.1.21. FD Sprocket Cover 59

5.1.22. Rear Wheel (Increasing chain slack) 59

5.1.23. Remove Rear Chain from FD Sprocket 60

5.1.24. Starter Motor Connection 61

5.1.25. Clutch Cable 61

5.1.26. Swing Arm 61

5.1.27. Engine From Main Frame Mountings 61

5.1 Engine Removal from Main Frame

⚠ WARNING

Never open a radiator cap when the engine is hot.

The pressure released can make the coolant begin to boil and expand.

Boiling coolant could spurt out of the filler neck or reservoir, causing severe burns.

⚠ CAUTION

DO NOT perform any operation on cooling system soon after the motorcycle is OFF.

They can extremely hot and will cause serious injuries.

Wait until the engine temperature is the same as the outdoor temperature.

NOTE

- *Ensure the motorcycle is upright on a firm and flat surface.*

NOTE

- *Drain the engine oil only in when the engine is warm.*

⚠ WARNING

The engine and engine oil are very hot at operating temperature - be Careful not to burn yourself.

5.1.1. Pillion Seat

⚠ CAUTION

Please Take care while disassembling and assembling the seats, and sheet metal parts, as any sharp edges will lead to injuries.

- Insert the key **(a)** on the seat key slot and turn clockwise direction.

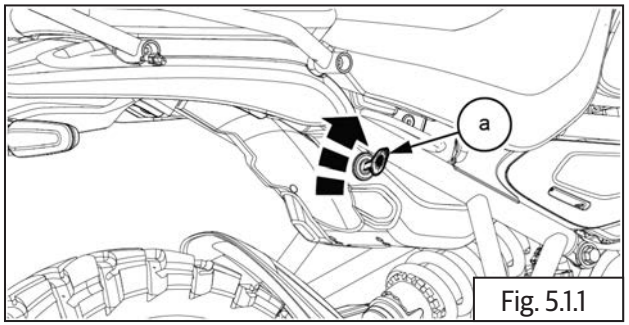

Fig. 5.1.1

- Slide the seat **(a)** towards forward direction.

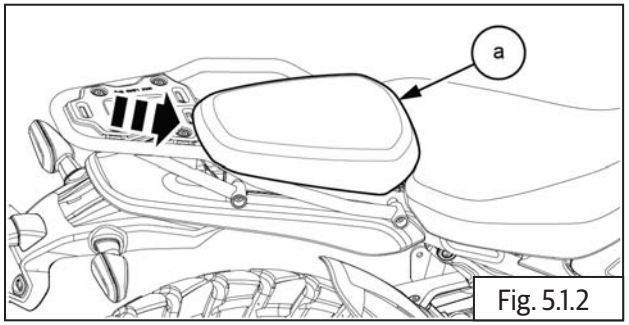

Fig. 5.1.2

- Remove the pillion seat **(a)**.

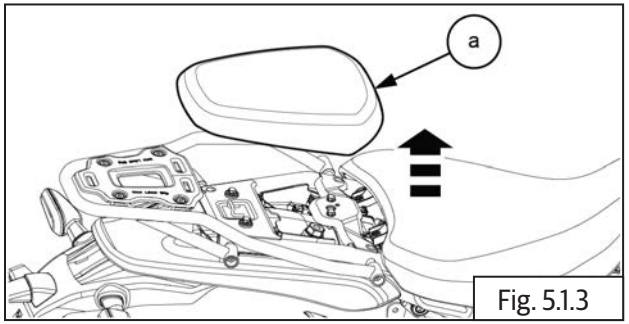

Fig. 5.1.3

5.1.2. Rider Seat

- Slide the seat **(a)** towards backward direction.

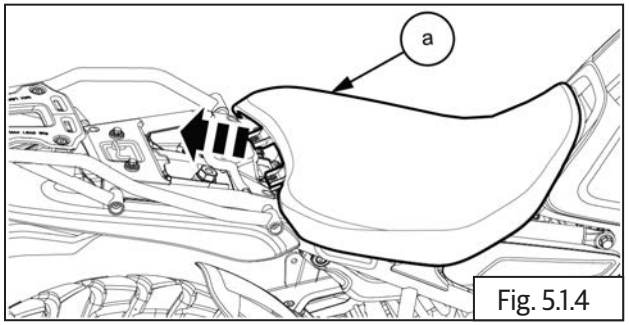

Fig. 5.1.4

- Remove the rider seat **(a)**.

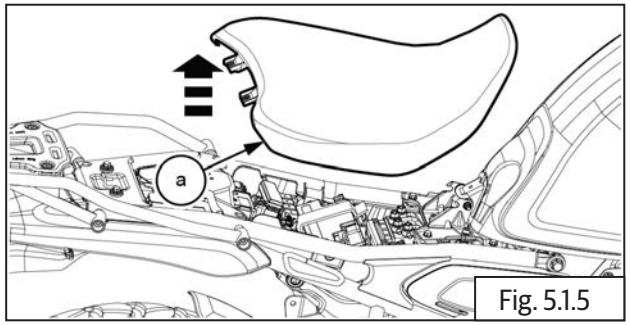

Fig. 5.1.5

⚠ CAUTION

Please Take care while disassembling and assembling the seats, and sheet metal parts, as any sharp edges will lead to injuries.

5.1.3 Disconnect Battery Terminal

- Ensure Ignition and stop switch are in OFF position before disconnecting battery cables.
- Switch "OFF" the engine and remove ignition key from the key barrel.

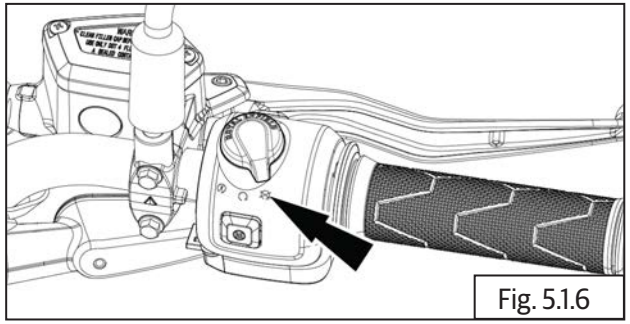
Fig. 5.1.6

- Disconnect the negative (- ve) coupler **(a)**.

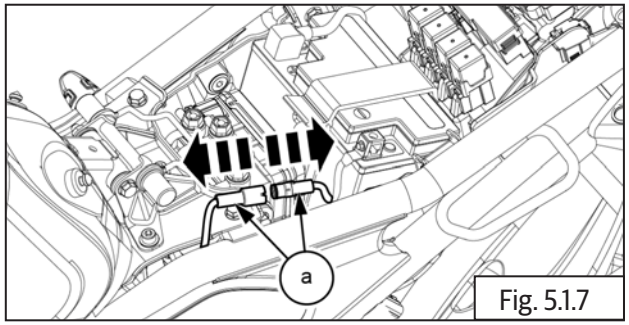

Fig. 5.1.7

- Disconnect battery negative (- ve) terminal bolt **(a)**.

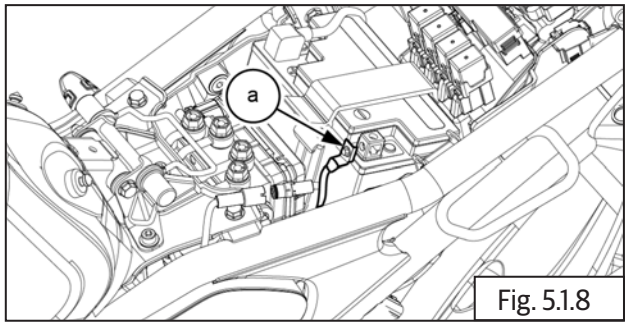

Fig. 5.1.8

	10 mm Socket with Ratchet

- Disconnect battery positive (+ ve) terminal bolt **(a)**.

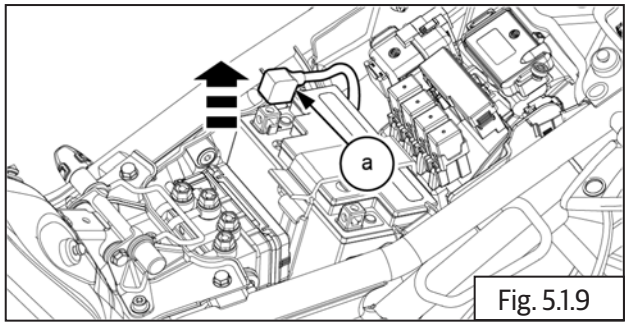

Fig. 5.1.9

	10 mm Socket with Ratchet

5.1.4 Fuel System

⚠ WARNING

Gasoline is extremely flammable and highly explosive. Please handle with care. Improper handling can lead to fatal accident or serious injury. Always drain/fill fuel only in a well ventilated area.

Ensure there is no scope for flames or sparks near by while draining/filling fuel.

⚠ CAUTION

Make sure the fuel pressure is relieved before disconnecting the fuel connection.

⚠ CAUTION

Be careful while connect and disconnect the electrical couplers. Do not damage pins of the couplers.

- Loosen and remove 3Nos cap bolts with washers **(a)** from tank mount bracket.

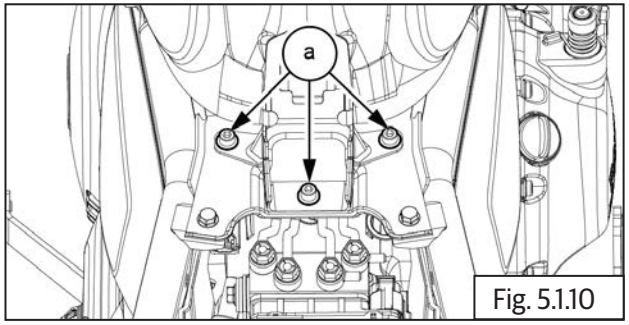

Fig. 5.1.10

	5mm Allen key

- Gently lift fuel tank **(a)** upwards and pull backwards slightly.

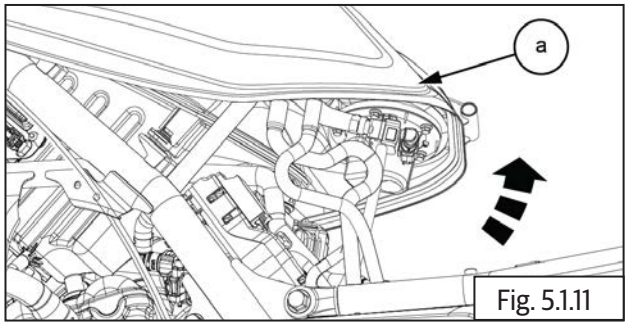

Fig. 5.1.11

⚠ CAUTION

DO NOT lift the tank too much to prevent damage to connectors and brake hoses.

- Disconnect EVAP connection hose **(b)** from bottom of fuel tank.
- Disconnect drain hose connection **(a)** from bottom of fuel tank

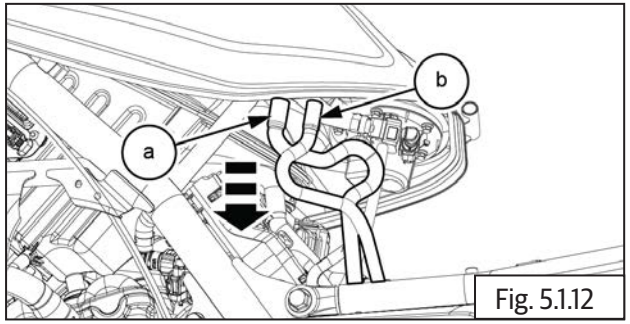

Fig. 5.1.12

- Clean quick fix adapter area and disconnect by pressing lock button **(a)** from fuel pump **(b)** .

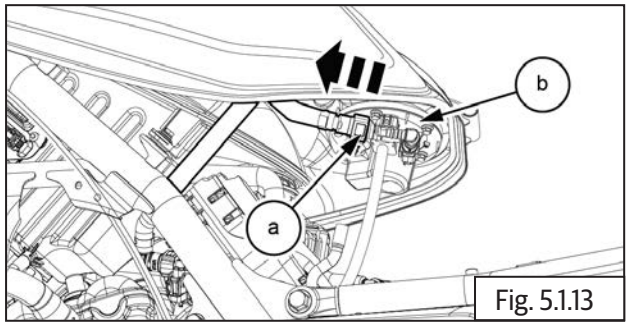

Fig. 5.1.13

- Disconnect fuel pump connector **(a)** from fuel tank **(b)**.

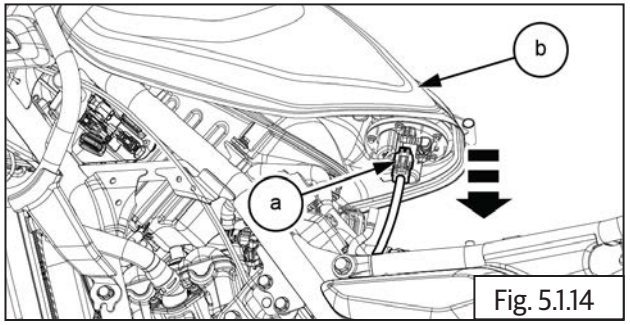

Fig. 5.1.14

- Disconnect fuel gauge connector **(a)** from fuel tank .

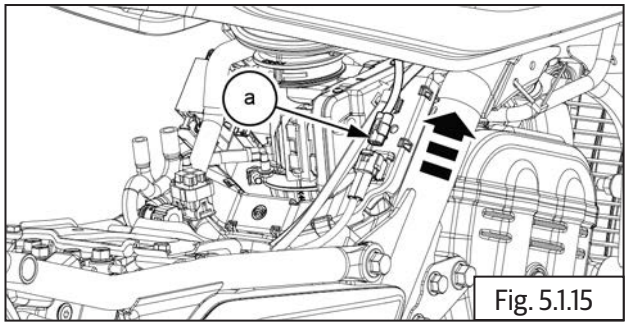

Fig. 5.1.15

- Gently remove fuel tank **(a)** from frame.

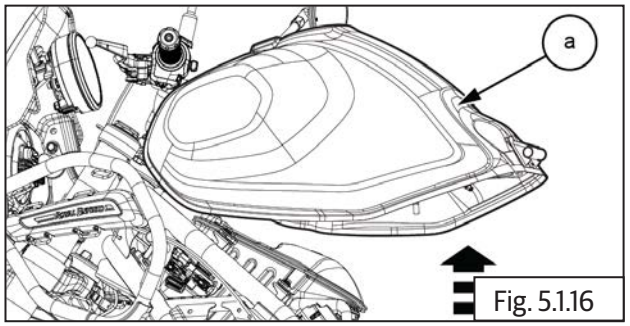

Fig. 5.1.16

- Remove fuel hose **(a)** from injector cap.

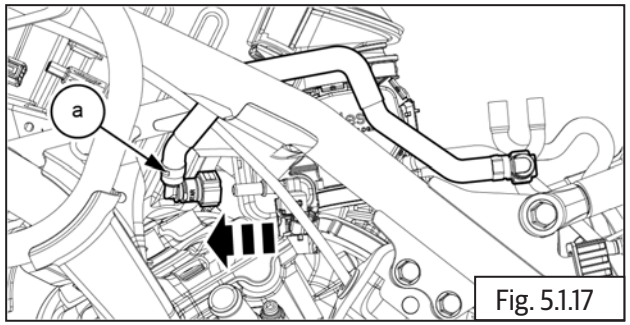

Fig. 5.1.17

5.1.5. Side Panel LH

- Loosen and remove button head bolt 1 no **(M6)** **(a)** along with washer **(b)** from LH side panel.

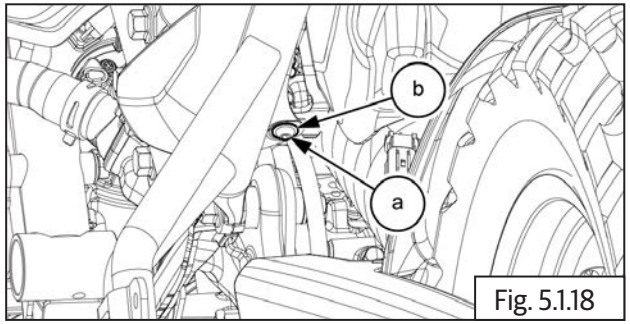

Fig. 5.1.18

	4 mm Allen Socket with Ratchet

- Gently Pull the side panel LH **(a)** outside for opening the same.

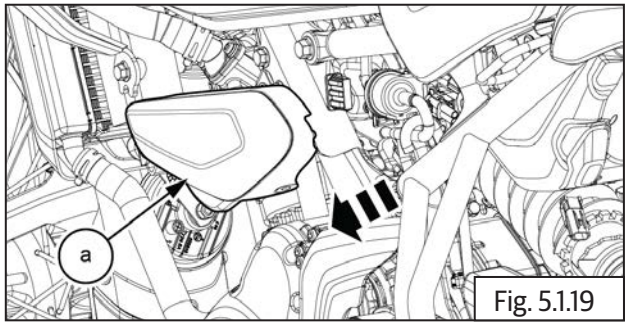

Fig. 5.1.19

- Disconnect below listed couplers from LH bottom battery tray.
- **1. Crank position sensor**
- **2. Gear position sensor**

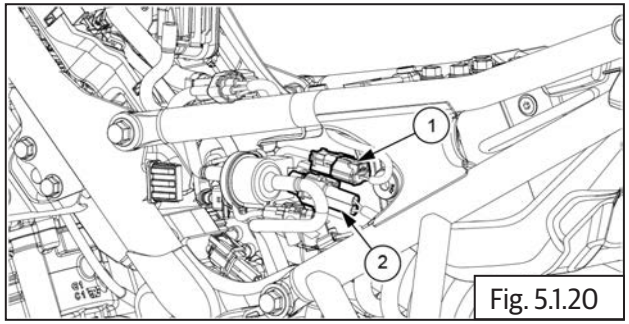

Fig. 5.1.20

5.1.6 Sump Guard

- Loosen and remove button head bolts 2 nos **(M6)** **(a)** from sump guard bottom.

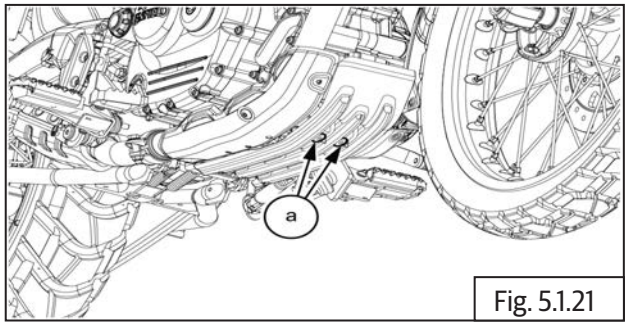

Fig. 5.1.21

	5 mm Allen Socket with Ratchet

- Gently Pull the sump guard **(a)** outside from bracket.

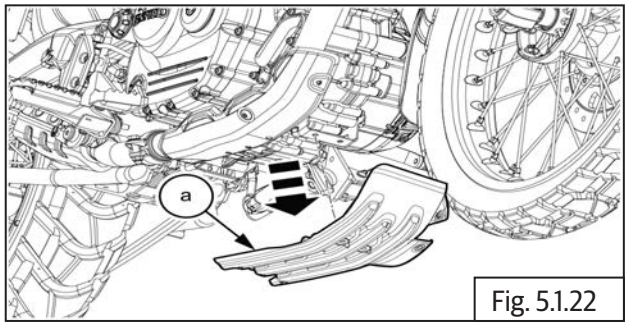

Fig. 5.1.22

- Loosen and remove flange head bolt **(M10) (a)** with nut **(b)** from engine.

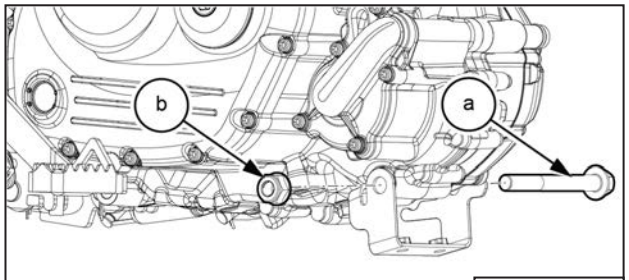

Fig. 5.1.23

	14 mm Socket with Ratchet 17 mm Double end Spanner

- Remove the sump guard bracket front **(a)** from engine.

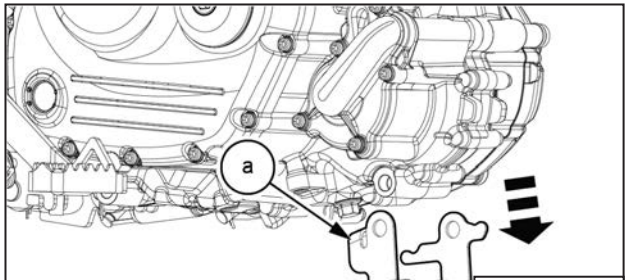

Fig. 5.1.24

- Loosen and remove flange head bolt **(M10) (a)** with nut **(b)** from engine.

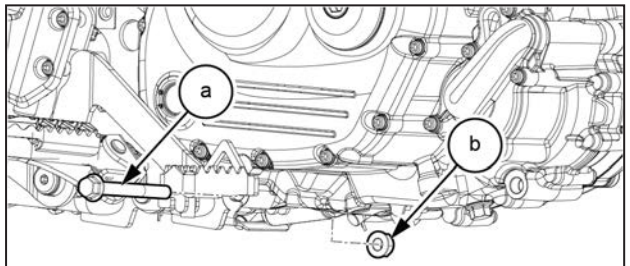

Fig. 5.1.25

	14 mm Socket with Ratchet 17 mm Double end Spanner

- Remove the sump guard bracket rear **(a)** from engine.

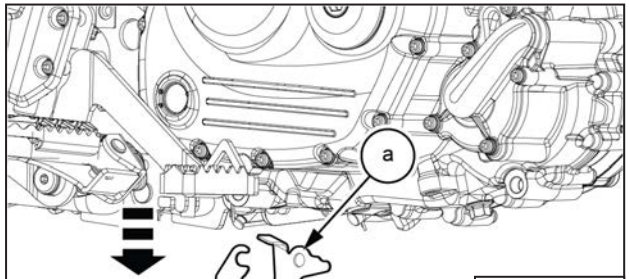

Fig. 5.1.26

5.1.7 Coolant Drain

- Open the radiator pressure cap **(a)**.

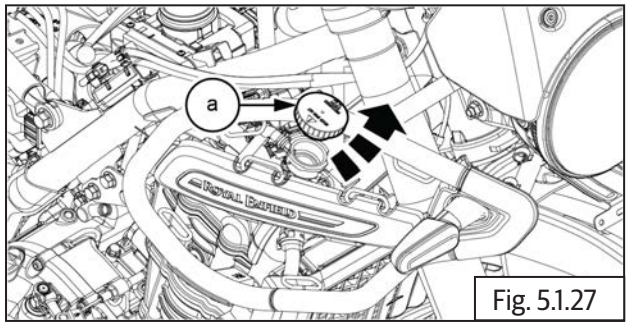

Fig. 5.1.27

- Open the expansion cap **(a)**.

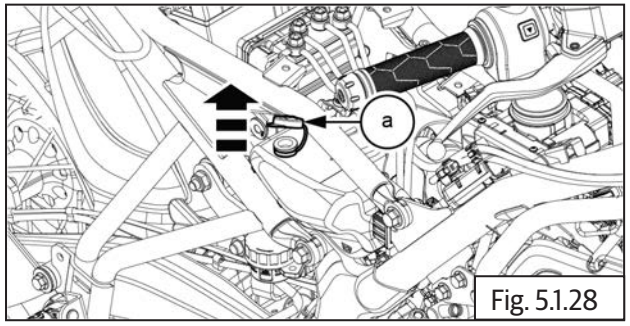

Fig. 5.1.28

- Place a tray under the engine, loosen and remove coolant drain bolt **(M6) (a)** along with copper washer **(b)** from the RHS water pump cover.

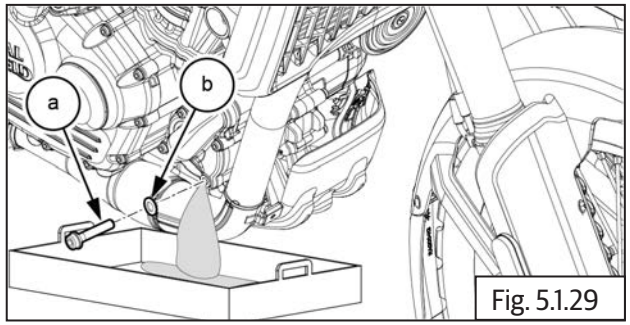

Fig. 5.1.29

	5mm Allen key

5.1.8 . Drain Plug

WARNING

The engine and exhaust system get extremely hot during normal operation and direct contact with skin can cause serious burns. Make sure engine is in normal temperature (OR) cooled before starting operation.

NOTE

- *Ensure the motorcycle is upright on a firm and flat surface.*
- *Start the engine and allow the engine and oil to warm up for a few minutes and then turn it OFF to facilitate easy draining of oil.*

- Loosen and remove oil filler cap (a) from the crankcase top on the RH side. Use an adjustable plier with soft jaws to unscrew filler cap if necessary.

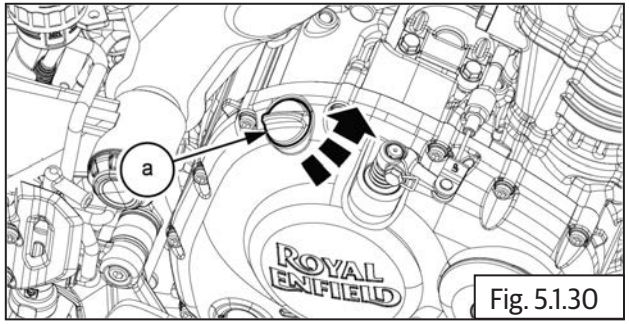

Fig. 5.1.30

	Adjustable plier with soft jaws

- Place a tray under the engine, loosen and remove 2 Nos drain plugs **(a)** along with "O" Rings **(b)** from LHS oil sump.

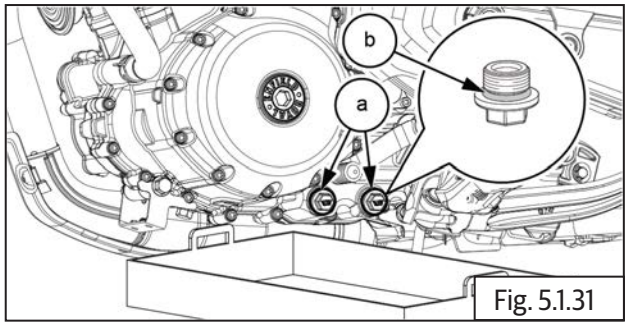

Fig. 5.1.31

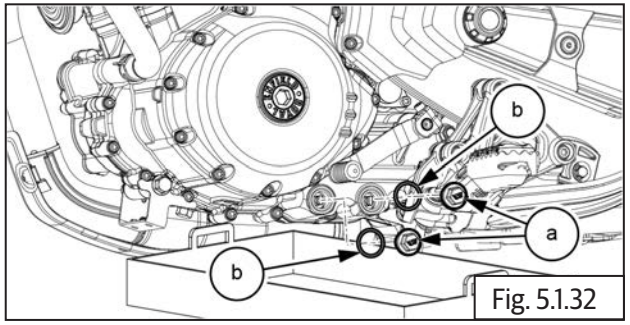

Fig. 5.1.32

	17 mm Socket with Ratchet

- Remove the 2 Nos strainers **(a)** with "O" Rings **(b)** from LHS oil sump.

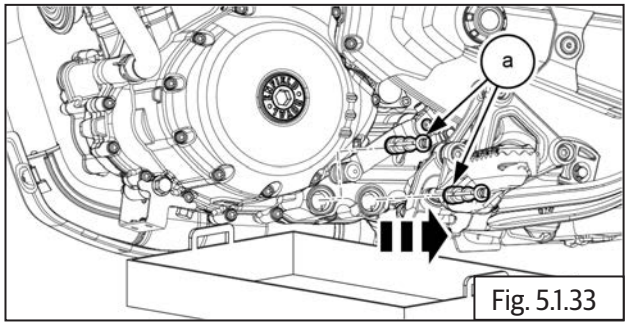

Fig. 5.1.33

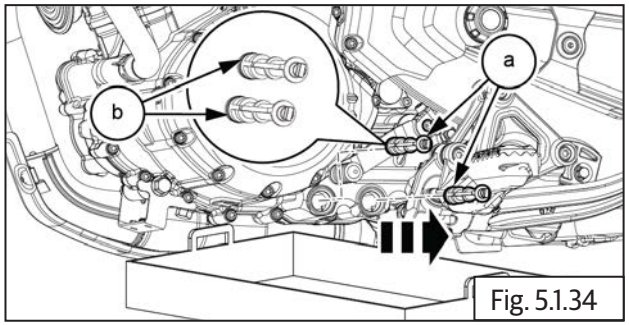

Fig. 5.1.34

	Nose Plier

- Allow the engine oil to drain out completely from the engine.

5.1.9 . Gear Pedal

- Remove the cap bolt **M6 (a)** from gear pedal.

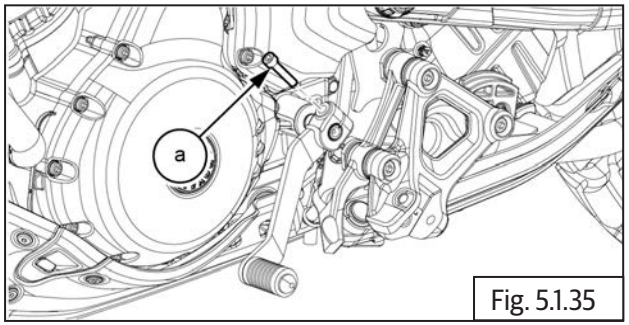

Fig. 5.1.35

	5mm Allen socket with ratchet

- Remove gear pedal from gear shift shaft.

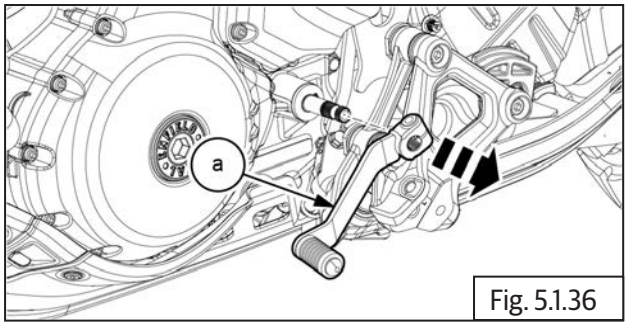

Fig. 5.1.36

5.1.10. Air Filter Box Assembly

- Remove the clamp **(a)** from bottom breather hose.
- Detach the breather hose from engine .

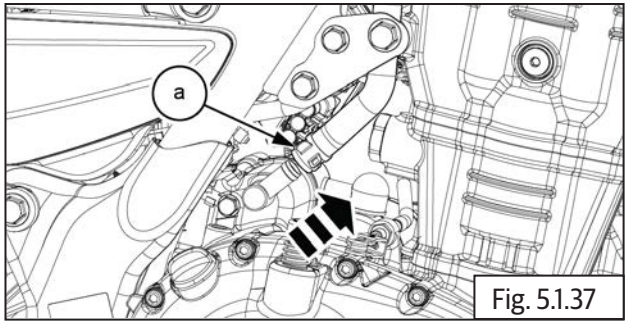

Fig. 5.1.37

	Plier

- Remove the clamp **(a)** from air filter bellow hose.

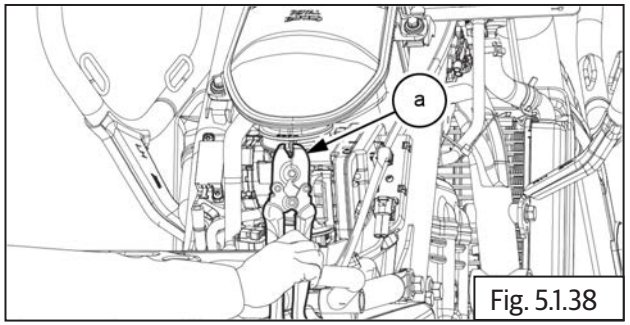

Fig. 5.1.38

	Clamp Removal and install tool

- Loosen and remove 3 Nos Hex flange bolts **(a)** **(M6)** from air filter box.

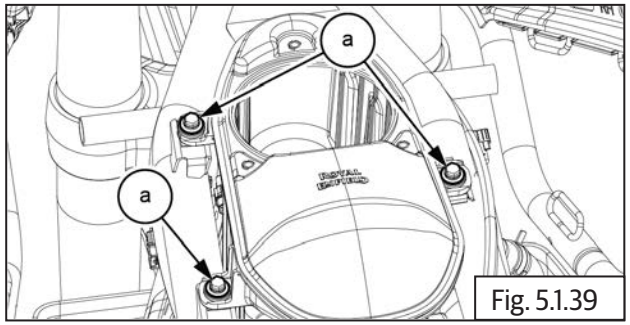

Fig. 5.1.39

	8 mm socket with ratchet

- Remove 3 Nos sleeves **(a)** with grommets **(b)** from air filter box.

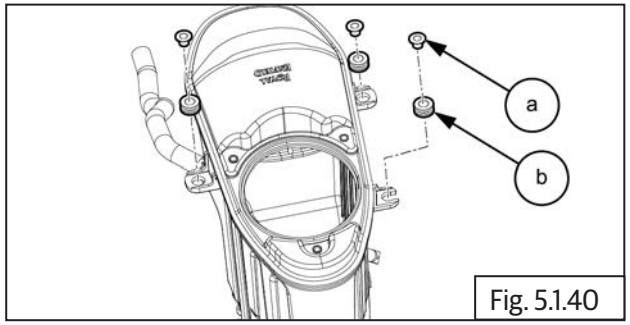

Fig. 5.1.40

- Slightly lift the air filler box **(a)** to access the ignition coil connector.

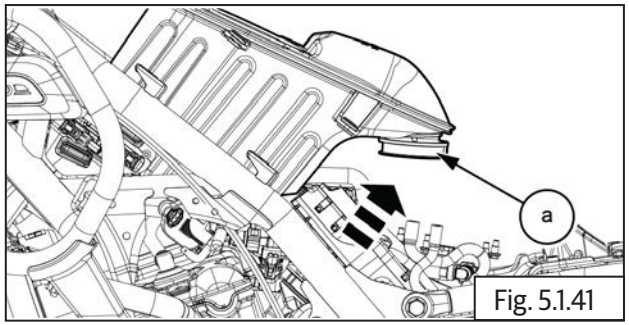

Fig. 5.1.41

- Remove spark plug cap **(a)** from engine.

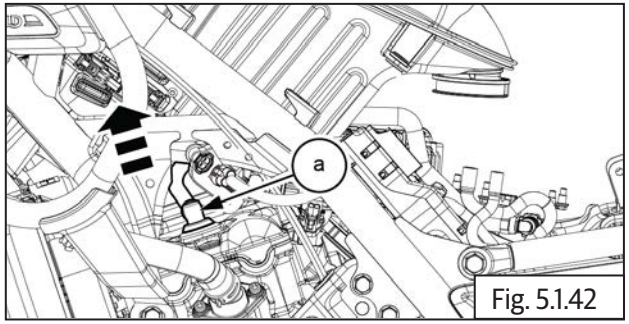

Fig. 5.1.42

- Disconnect the **2 Nos** ignition coil couplers **(a)**.

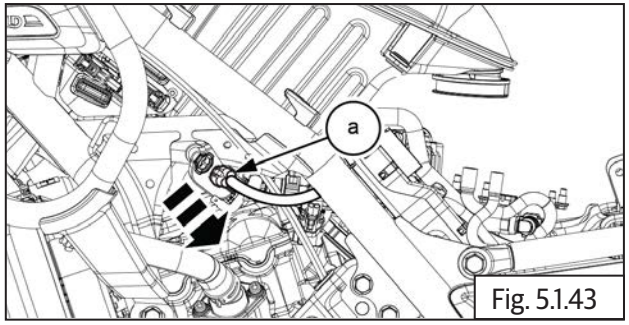

Fig. 5.1.43

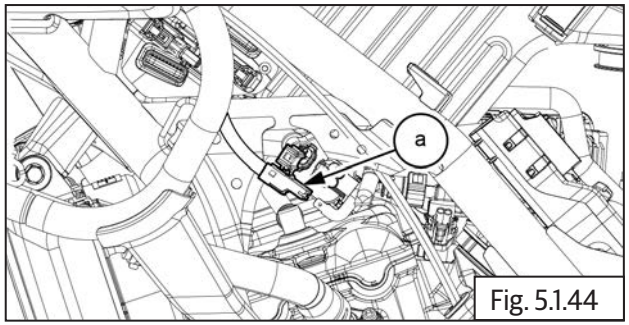

Fig. 5.1.44

- Remove air filter box **(a) with** ignition coil.

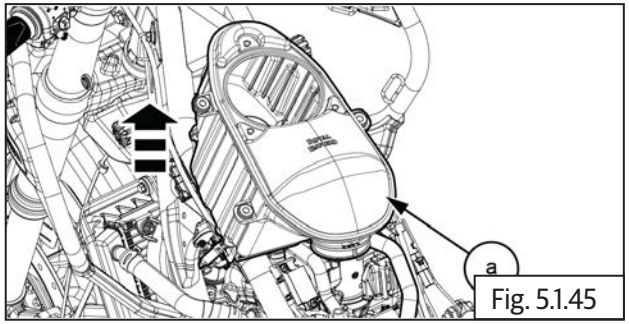

Fig. 5.1.45

5.1.11. Radiator

- Disconnect the cooling fan coupler **(a)**.

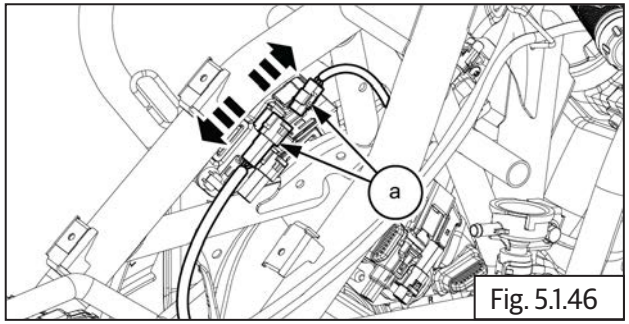

Fig. 5.1.46

- Remove the 1 Nos bolt **(M6) (a)** from filler neck.

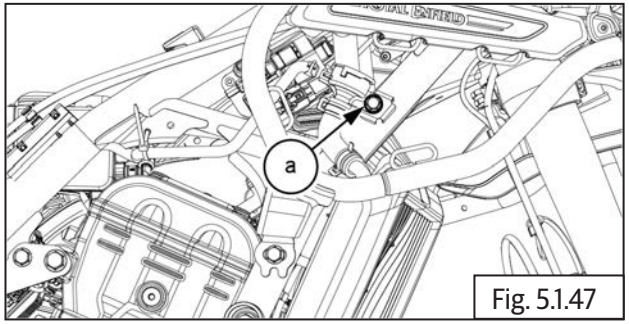

Fig. 5.1.47

	10 mm Socket with Ratchet

- Remove the clamp **(a)** from engine inlet hose.

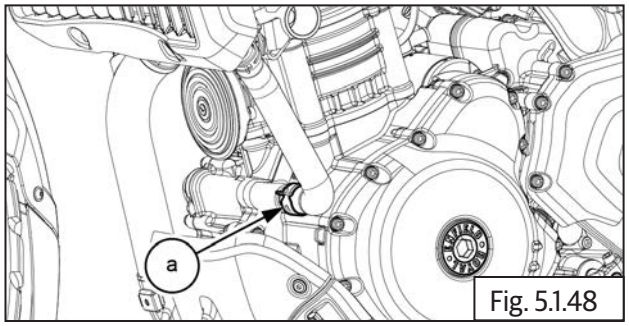

Fig. 5.1.48

	Plier

- Pull and remove the hose **(a)** from engine.

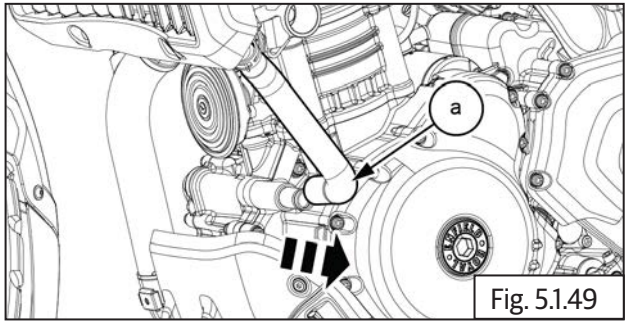

Fig. 5.1.49

- Remove the clamp **(a)** from engine outlet hose.

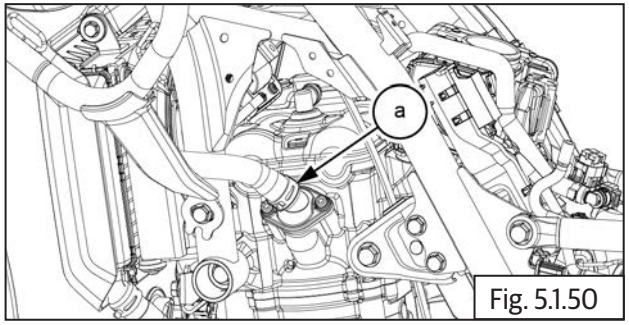

Fig. 5.1.50

	Plier

- Pull and remove the hose **(a)** from thermostat housing.

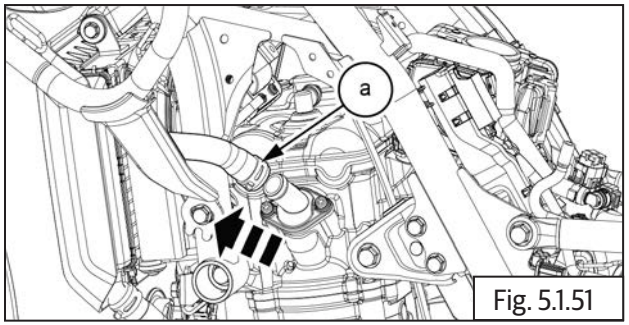

Fig. 5.1.51

- Remove the 3 Nos bolts **(M6) (a)** from radiator guard.

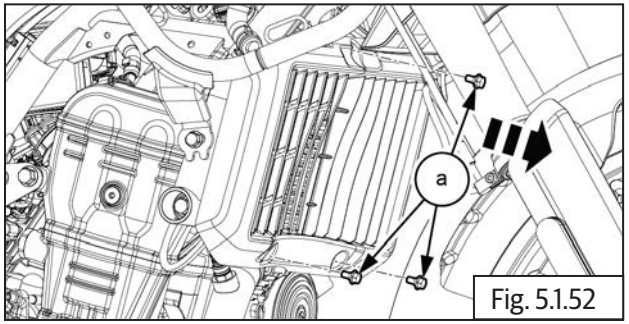

Fig. 5.1.52

	10 mm Socket with Ratchet

- Remove the guard **(a)** from radiator.

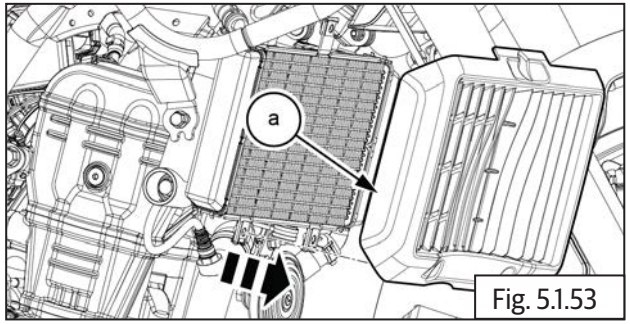

Fig. 5.1.53

- Remove the 1 Nos bolts **(M6) (a)** from bottom of the radiator.

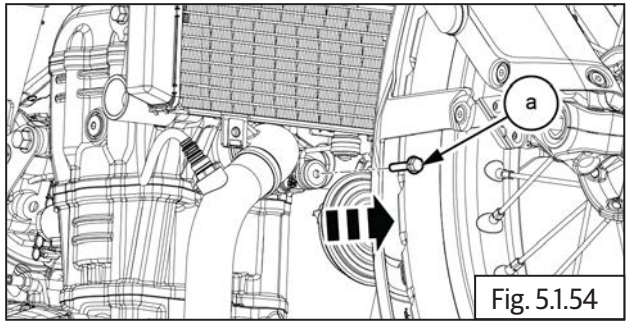

Fig. 5.1.54

	10 mm Socket with Ratchet

- Remove the 1 Nos bolts **(M6) (a)** from top of the radiator.

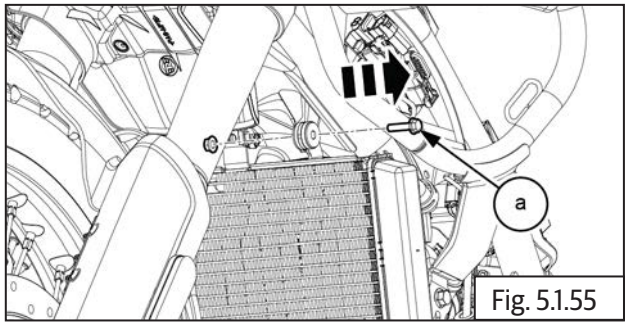

Fig. 5.1.55

	10 mm Socket with Ratchet

- Remove the radiator with hoses **(a)** from engine.

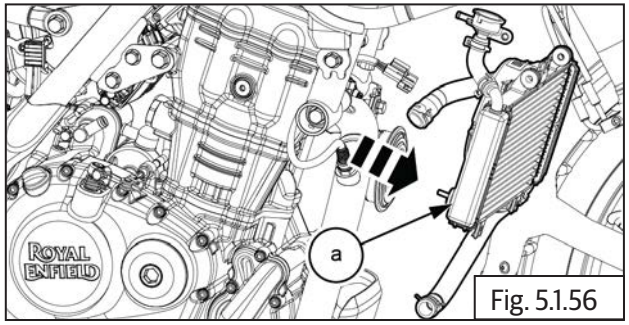

Fig. 5.1.56

5.1.12. Sensor / Oxygen Sensor Connectors (Front)

- Detach the 1 Nos omega clips **(a)** from Oxygen Sensor wiring harness.

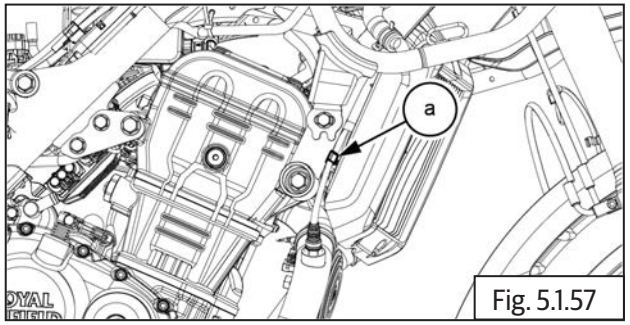

Fig. 5.1.57

	Screwdriver

- Oxygen sensor coupler located on RHS chassis frame.
- Disconnect oxygen sensor connector**.**

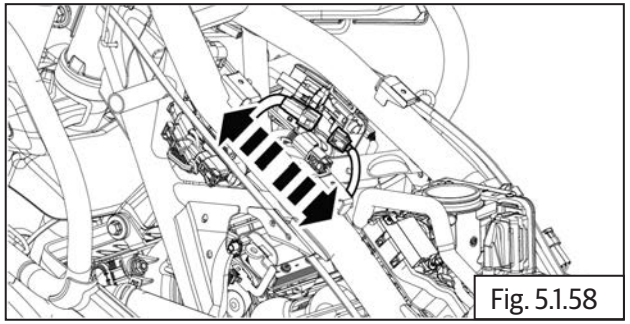
Fig. 5.1.58

5.1.13. Exhaust Pipe

Prior Removal:

- Remove the radiator.
- Remove 3 Nos button head bolts **(M6) (a)** from exhaust pipe guard.

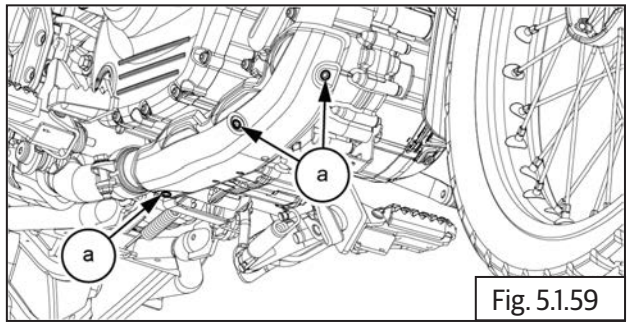

Fig. 5.1.59

	4mm Allen key

- Remove guard from exhaust pipe.

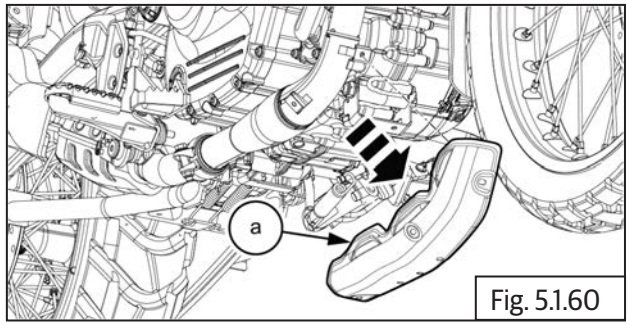

Fig. 5.1.60

- Loosen and remove 2 Nos flange nuts **(M8) (a)** from the cylinder head assembly.

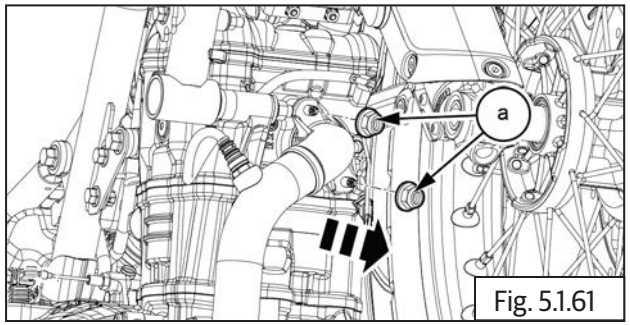

Fig. 5.1.61

	12 mm socket with ratchet

- Remove the exhaust pipe **(a)**.

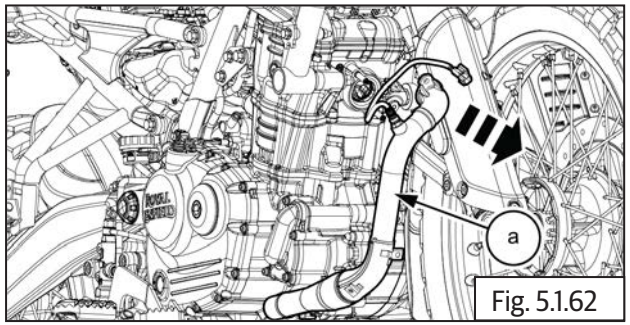

Fig. 5.1.62

- Remove the gasket **(a)** from the silencer rear end.

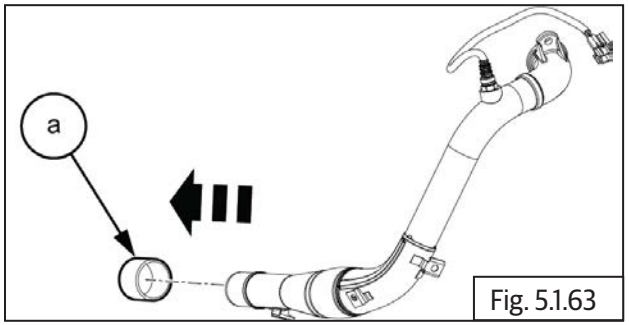

Fig. 5.1.63

	Screwdriver

- Remove exhaust Copper Gasket **(a)** from cylinder head.

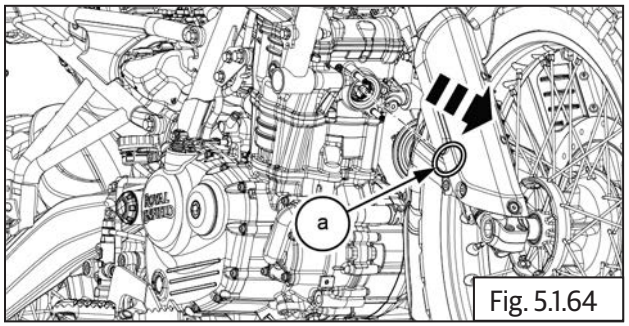

Fig. 5.1.64

	Screwdriver and Mallet

5.1.14 Wiring harness bracket

- Loosen and remove 1 Nos. Hex socket head bolts **(M6) (a)** from clip bracket **(b)**.
- Remove clip bracket **(b)** from engine.

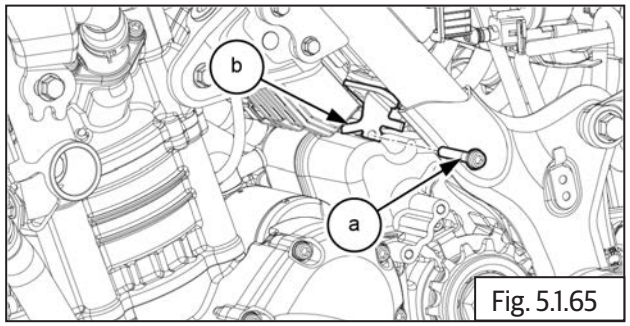

Fig. 5.1.65

	5 mm Allen key with Ratchet

5.1.15 Canister

- Remove the strap **(a)** from canister.

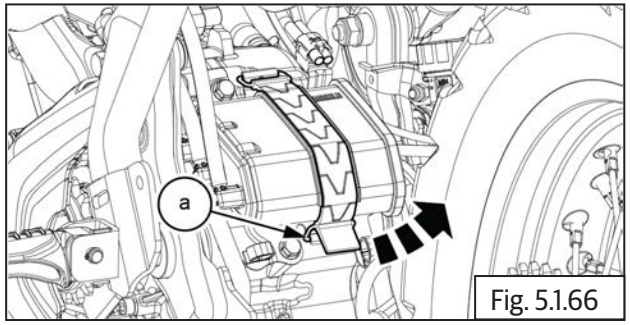

Fig. 5.1.66

- Remove the screw **(T40) (a)** with washer **(b)** from the wire guide.
- Remove the wire guide **(c)** from chassis frame .

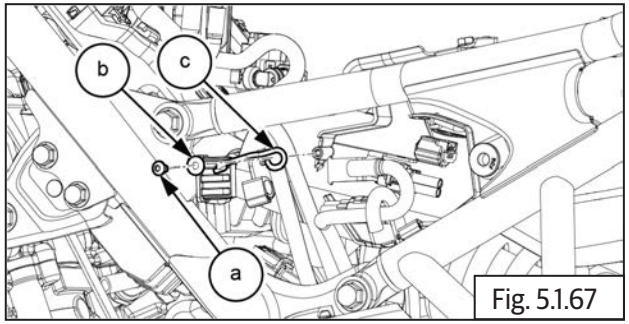

Fig. 5.1.67

	3mm Allen key

- Remove the canister with pipe assembly **(a)** from chassis frame.

⚠ CAUTION

Do not apply excessive force to pull out canister with hoses as it will damage the canister and the hose pipes.

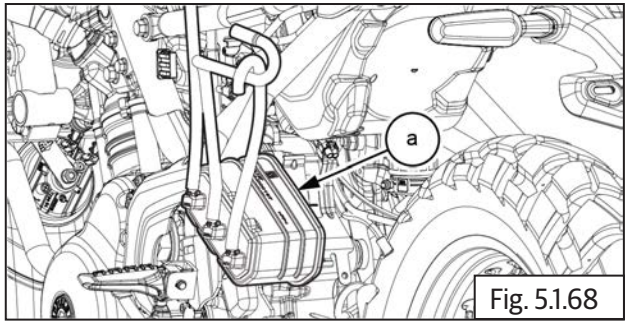

Fig. 5.1.68

- Loosen and remove the flange head bolts **2 Nos (M6) (a)** from canister bracket.

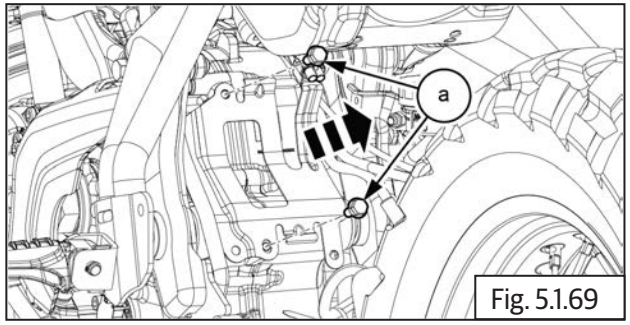

Fig. 5.1.69

	10mm socket with ratchet

- Detach the coupler clip **(a)** from canister bracket.

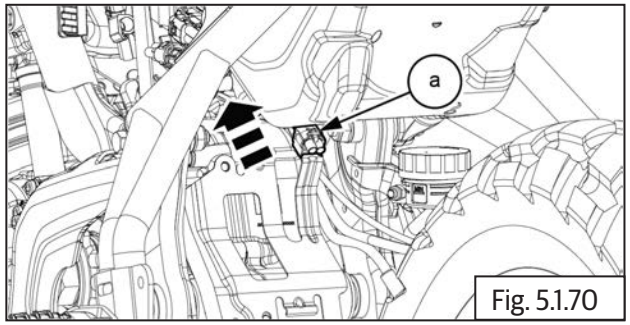

Fig. 5.1.70

	Connector

- Remove the canister bracket **(a)** from chassis frame.

Fig. 5.1.71

5.1.16. EMS Throttle Body

- Disconnect hose **(a)** from throttle body.

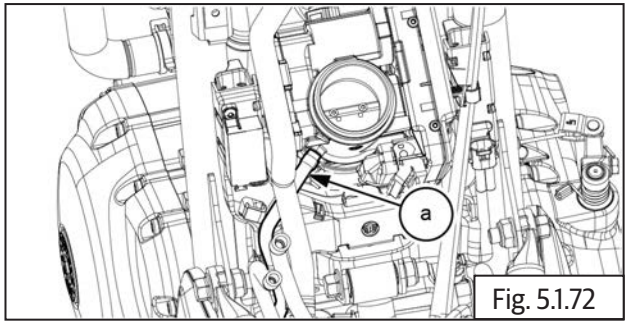

Fig. 5.1.72

- Disconnect coupler from ECU.

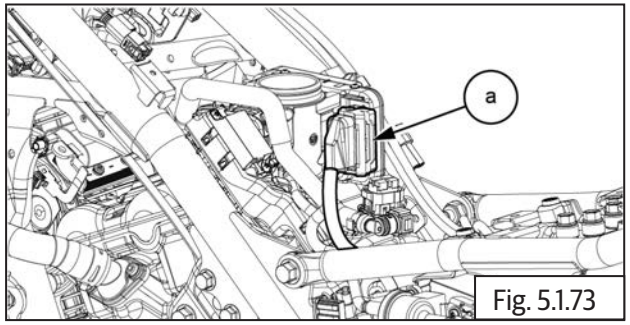

Fig. 5.1.73

- Loosen worm clip screws **(M5) (a)** to a disconnect EMS throttle body **(b)** from transition piece.

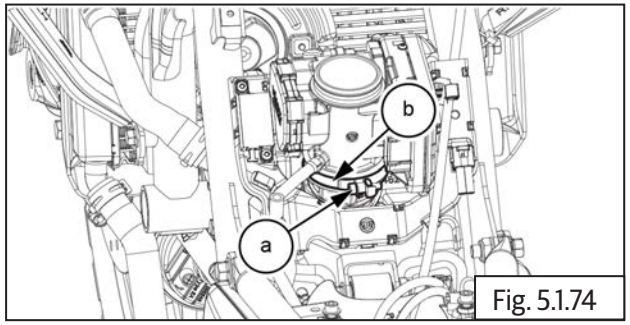

Fig. 5.1.74

	4 mm Allen socket with ratchet

- Remove EMS throttle body **(a)** from transition piece.

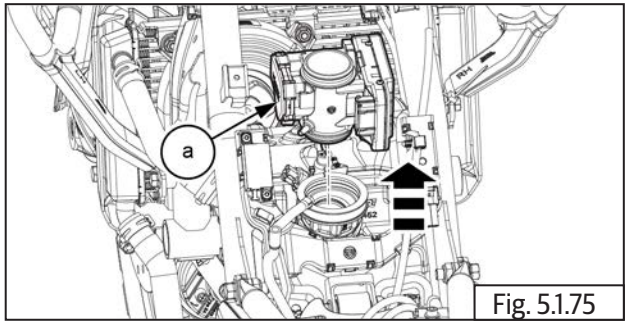

Fig. 5.1.75

5.1.17. Fuel Injector connector.

- Disconnect the fuel injector coupler **(a).**

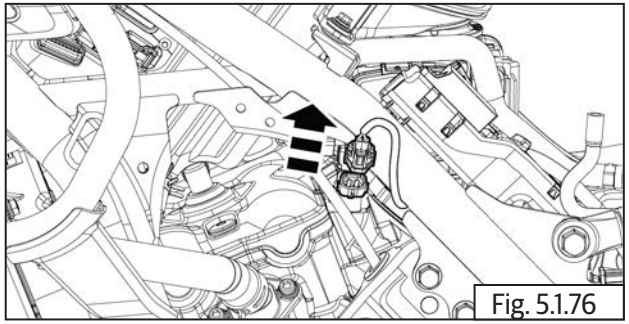
Fig. 5.1.76

5.1.18. Oil pressure switch connector.

- Disconnect the oil pressure switch coupler **(a).**

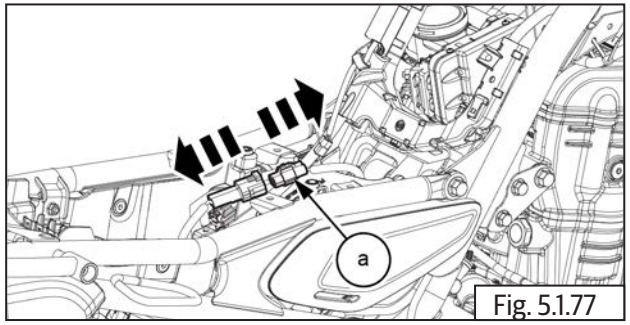

Fig. 5.1.77

5.1.19. Engine Coolant Temperature Sensor

- Coolant temperature sensor located on rear side of cylinder head.
- Remove coolant temperature sensor coupler **(a)**.

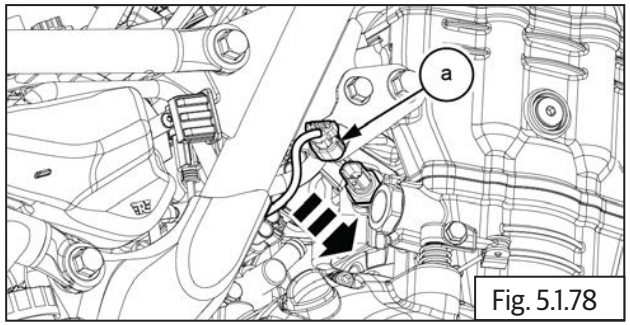

Fig. 5.1.78

5.1.20. RR Unit

- Disconnect 2 Nos electrical connector **(a)** from RR unit .

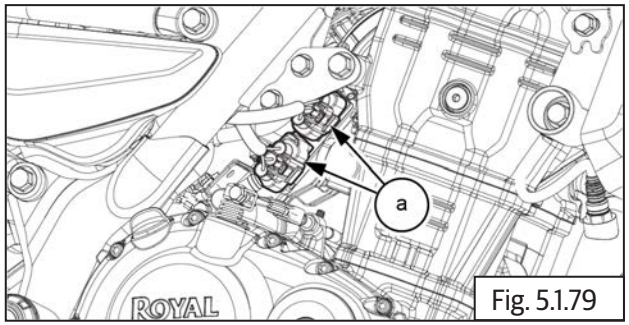

Fig. 5.1.79

5.1.21. FD Sprocket Cover

- Loosen and remove 3 Nos. Hex socket head bolts **(M6) (a)** from FD sprocket cover.

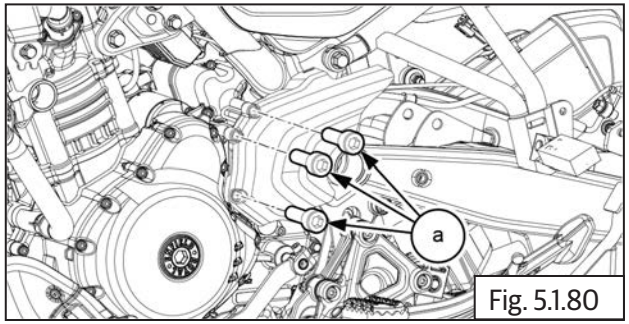

Fig. 5.1.80

	5 mm Allen key with Ratchet

- Remove the chain sprocket cover **(a)** from engine.

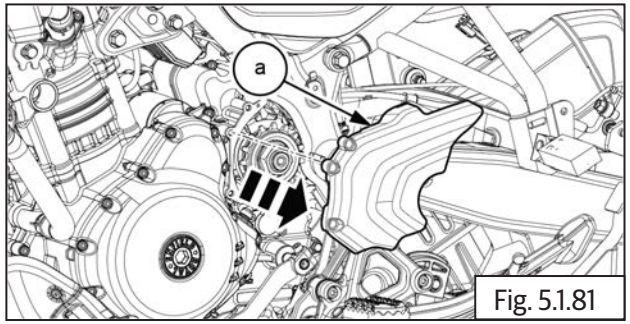

Fig. 5.1.81

5.1.22. Rear Wheel (Increasing chain slack)

- Loosen the nut **(M16) (b)** from RH and hold other side LH spindle **(a)** with tommy bar increase the chain slackness/tension..

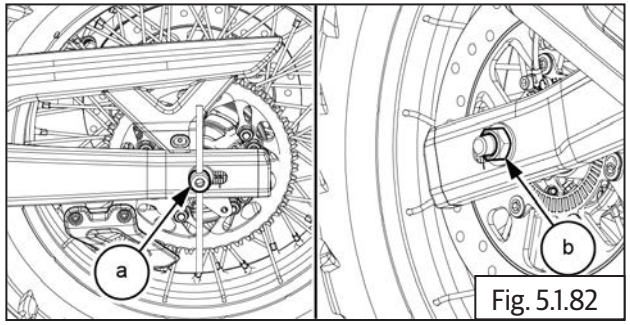

Fig. 5.1.82

	24 mm Ring spanner and Tommy bar

- Loosen the adjuster cap bolts **(M8) (a)** and **(b)** on both LH and RH swing arm.

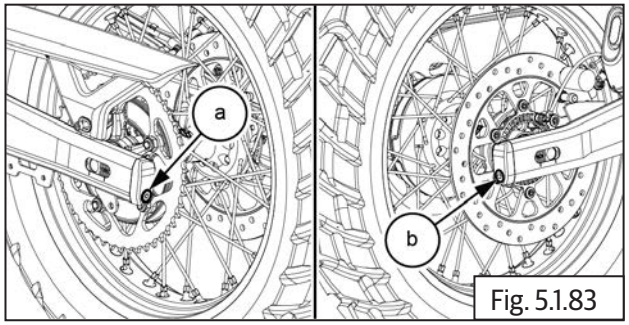

Fig. 5.1.83

	6 mm Allen Key

5.1.23. Remove Rear Chain from FD Sprocket

- Remove the drive chain **(a)** from the sprocket.

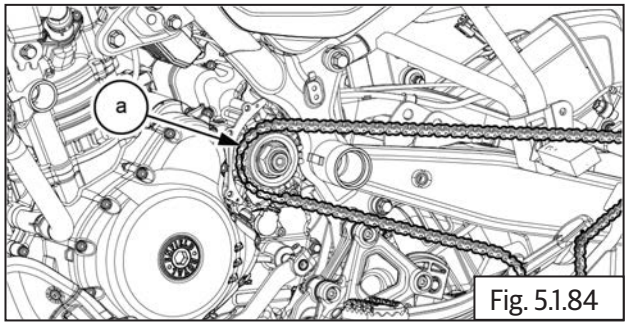

Fig. 5.1.84

5.1.24. Starter Motor Connection

- Loosen and remove the nut **(a)** from self motor and remove the main cable.

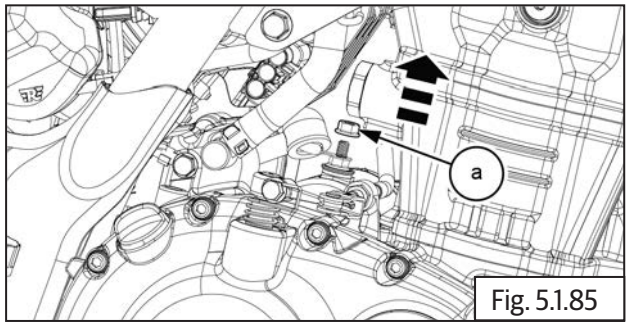

Fig. 5.1.85

	10 mm Socket with Ratchet

5.1.25. Clutch Cable

- Loosen outer lock nut **(M8) (a)** from rear of cable adjuster **(b)**.

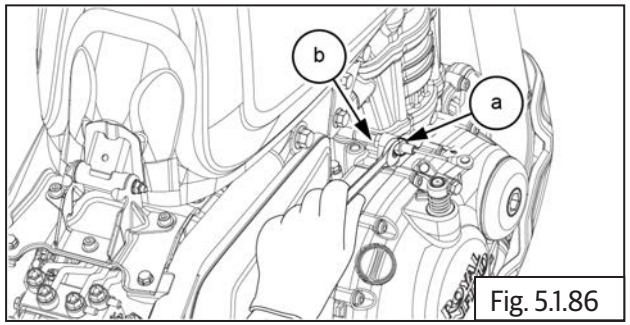

Fig. 5.1.86

	12 mm Socket with Ratchet

- Release inner cable **(a)** from clevis **(b)** on clutch actuating assembly **(c)**.

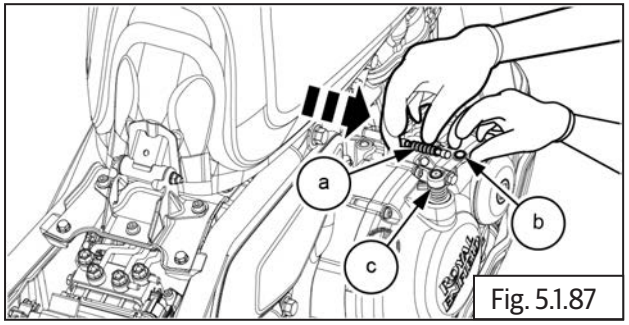

Fig. 5.1.87

- Remove rubber grommet **(a)** from clutch cable **(b)**.

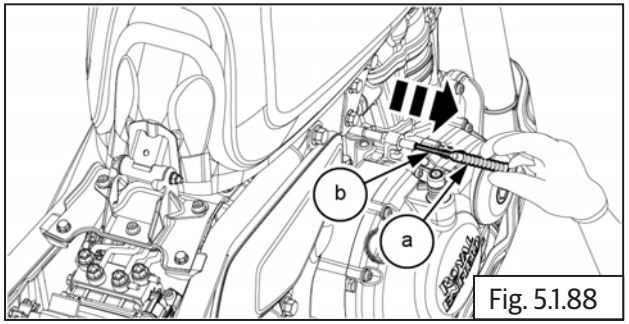

Fig. 5.1.88

- Loosen and remove inner locknut **(M8) (a)** fully and pull adjuster from housing cable guide.

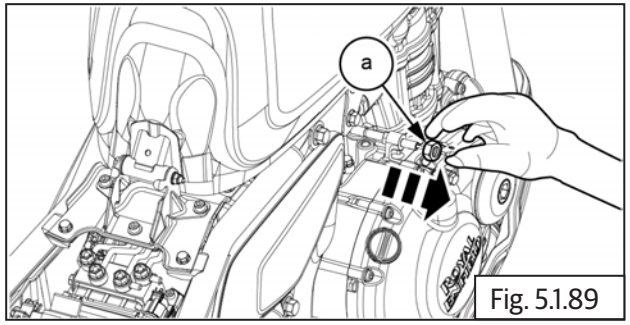

Fig. 5.1.89

	12 mm Socket with Ratchet

- Remove clutch cable **(a)** from cable guide **(b)**.

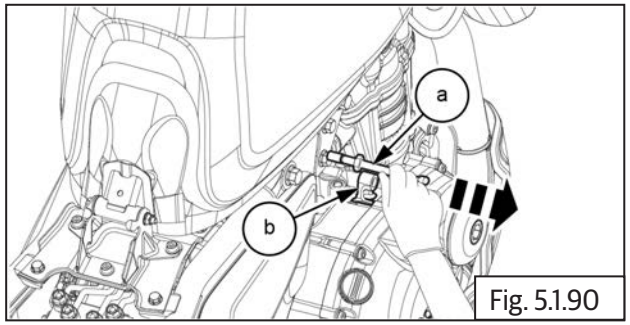

Fig. 5.1.90

- Remove outer lock nut **(a)** from clutch cable **(b)**.

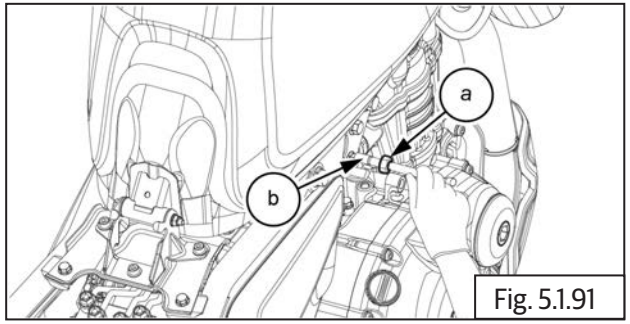

Fig. 5.1.91

	12 mm Socket with Ratchet

5.1.26. Swing Arm

- Remove pivot cap **(a)** from LHS & RHS swing arm spindle.

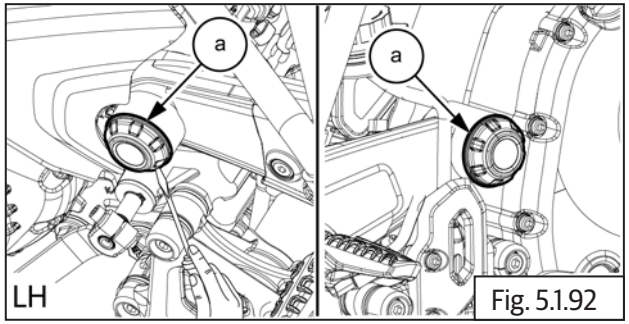

Fig. 5.1.92

	Screwdriver

- Hold spindle bolt **(M16) (a)** in frame RH side and loosen and remove hex nut **(M16) (b)** from LH side.

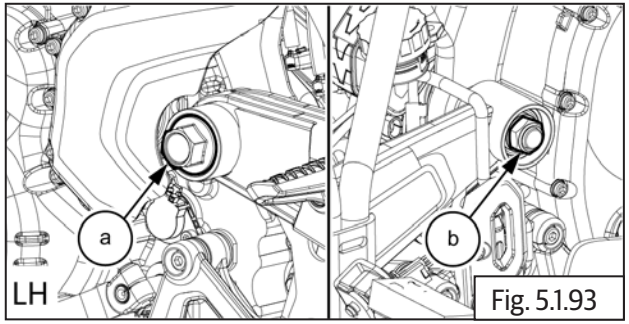

Fig. 5.1.93

	22 mm Socket with Ratchet 24 mm Socket with Ratchet

- Remove the spindle **(a)** along with thrust washer **(b)** from LH side.

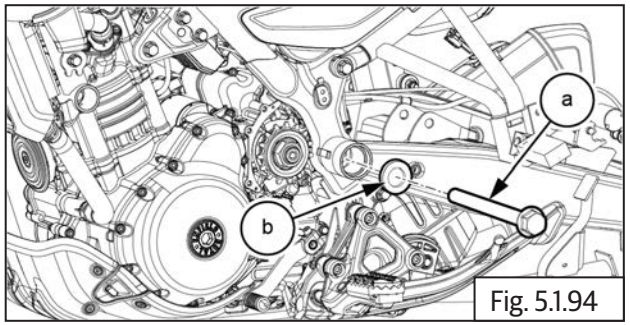

Fig. 5.1.94

⚠ CAUTION

- *Avoid resting the swing arm onto the CAT box as it will naturally tend to move down during this process..*

5.1.27. Engine From Main Frame Mountings

- Support engine **(a)** with flat jack (a) so that it will not fall off when mounting bolts are removed.

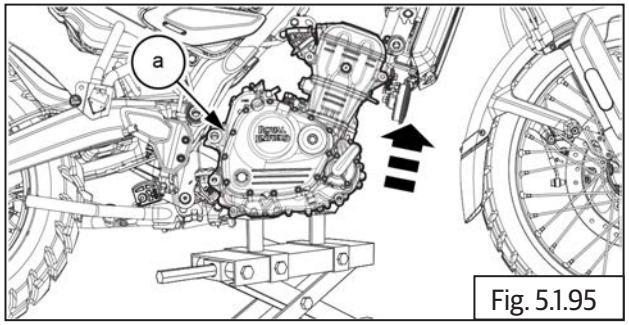

Fig. 5.1.95

- Loosen and Remove Hex head bolt **(M10) (a)** from LHS and RHS engine .

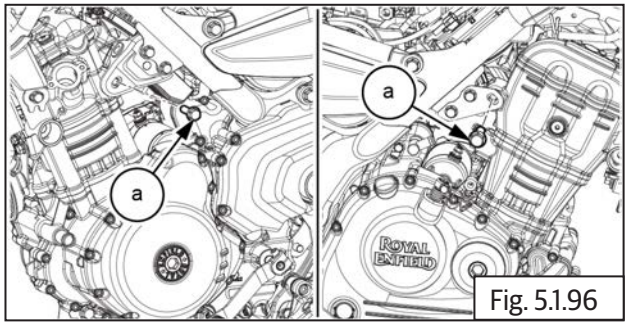

Fig. 5.1.96

	14 mm Socket with Ratchet

- Loosen and Remove Hex head bolt **(M10) (a)** from Rear LHS engine .

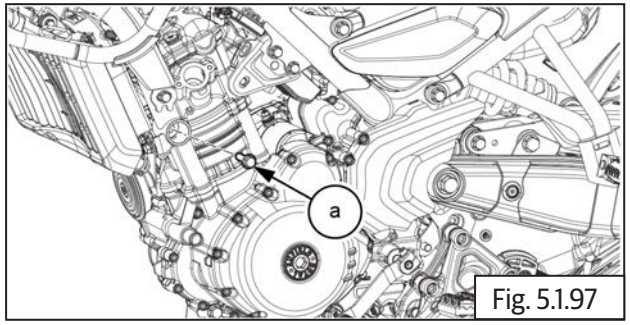

Fig. 5.1.97

	14 mm Socket with Ratchet

- Loosen and Remove Hex head bolt **(a)** and washers 2 Nos **(b)** with nut **(M10) (c)** from Front RHS main frame.

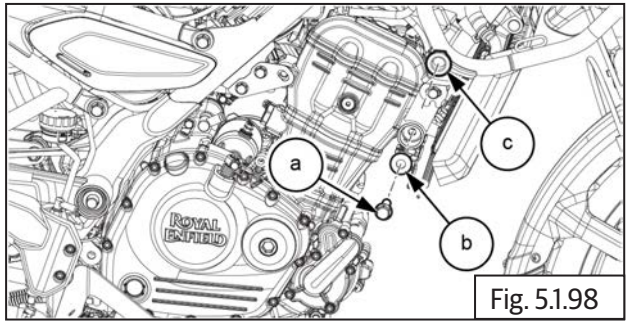

Fig. 5.1.98

	14 mm Socket with Ratchet

- Loosen and Remove Hex head bolt **(a)** with nut **(M10) (b)** from Front LHS main frame .

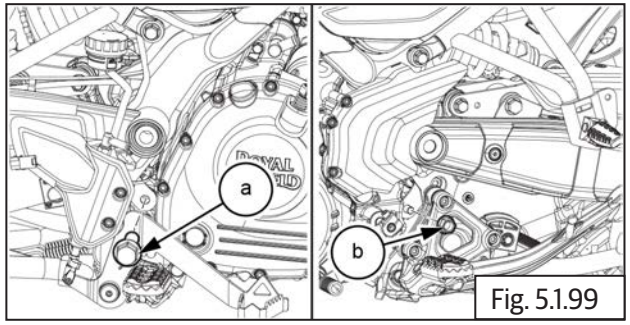

Fig. 5.1.99

	14 mm Socket with Ratchet

- Locate special tool **(a)** on main frame to loosen the rear mounting adjuster from frame RHS on rear side of engine.

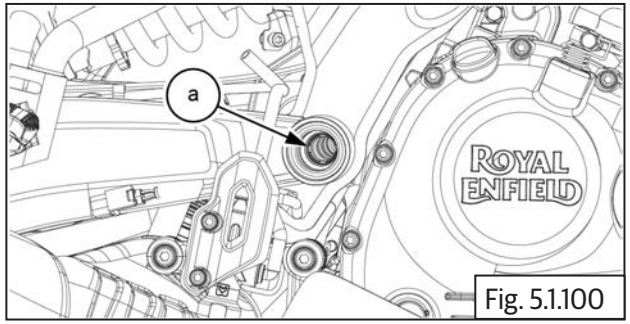

Fig. 5.1.100

SPL	Part No: ST32160/A
	Part Name: Frame Adjuster Swing arm

- Locate special tool **(a)** on front RHS engine to remove adjuster from frame RH.

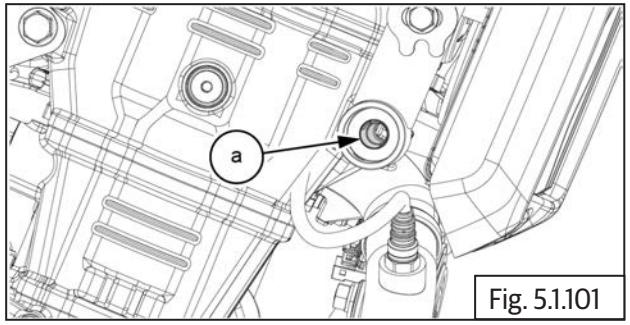

Fig. 5.1.101

SPL	Part No: ST32159/A
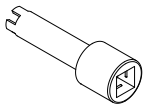	Part Name: Frame Adjuster K Engine

- Ensure bottom of engine **(a)** is supported suitably. Gently lower the engine from main frame.

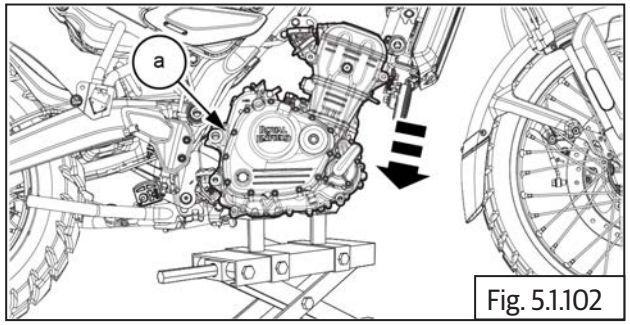

Fig. 5.1.102

ENGINE INSTALL TO MAIN FRAME

CONTENTS PAGE

5.2 Engine Install To Main Frame.....68

5.2.1. Swing Arm.....70

5.2.2. Clutch Cable 71

5.2.3 Clutch Cable Free Play Adjustment 72

5.2.4. Rear Chain To FD Sprocket 73

5.2.5. Drive Chain Free Play Adjustment 74

5.2.6. FD Sprocket Cover 75

5.2.7. RR Unit 76

5.2.8. Engine Coolant Temperature Sensor 76

5.2.9. Oil pressure switch connector 76

5.2.10. Fuel Injector connector 76

5.2.11. EMS Throttle Body 76

5.2.12. Canister 77

5.2.13 Wiring harness bracket 78

5.2.14. Exhaust Pipe 78

5.2.15. O2 Sensor / Oxygen Sensor Connectors(Front) 79

5.2.16 Radiator 79

5.2.17. Air Filter Box Assembly 81

5.2.18 . Gear Pedal 82

5.2.19 . Drain Plug 83

5.2.20 Radiator coolant filling 84

5.2.21 Air Bleeding 86

5.2.22. Sump Guard.....88

5.2.23. Side Panel LH.....89

5.2.24. Fuel Tank.....90

5.2.25 Connect Battery Terminal 91

5.2.26. Rider Seat 91

5.2.27. Pillion Seat 92

5.2 Engine Install To Main Frame

⚠ WARNING

DO NOT tighten bolts during initial installation.

NOTE

- *Ensure motorcycle is upright on a firm and flat surface.*
- *Ensure the front and rear wheels are clamped firmly to motorcycle ramp.*
- *Slide engine into main frame only from the LH side and with rear end of engine into mainframe first.*
- *Ensure frame adjusters at rear end of mainframe and all other mounting holes are aligned correctly with frames for ease of assembly.*
- *Lift engine into mainframe by suitable supporting from the bottom of engine.*

- Support engine suitably and firmly on a flat jack and ensure it is stable.

- Gently raise the engine to the main frame, ensuring the bottom of engine **(a)** is supported suitably.

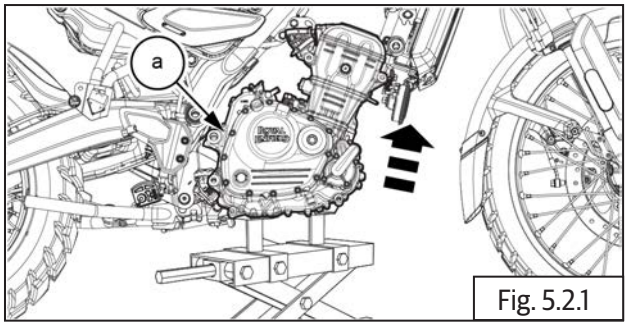

Fig. 5.2.1

- Lift the jack slowly and align mounting holes of engine and main frame.

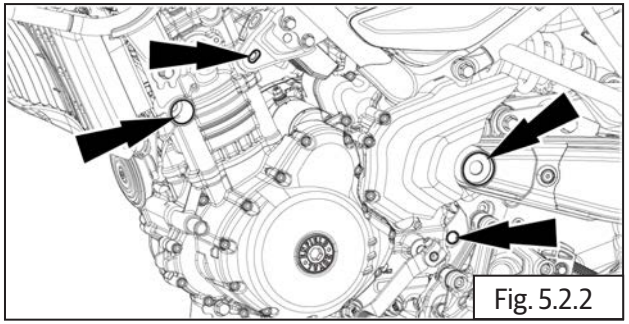
Fig. 5.2.2

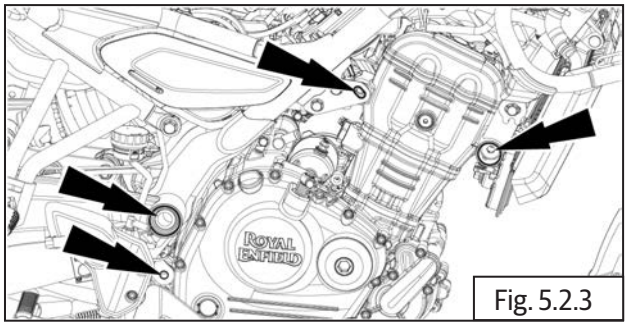
Fig. 5.2.3

- Place special tool on adjuster **(a)** and gently adjust till frame holds engine properly.

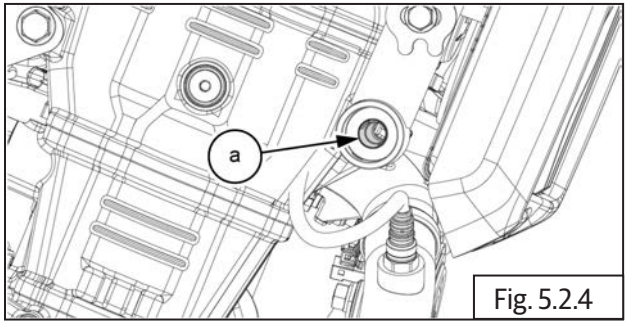

Fig. 5.2.4

SPL	Part No: ST32159/A
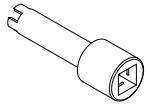	Part Name: Frame Adjuster K Engine

Torque	3 N-m / 0.3 kgf-m

- Lift the jack slowly and align mounting holes of frame with mounting holes on engine.

- Place special tool on adjuster **(a)** and gently adjust till frame holds engine properly.

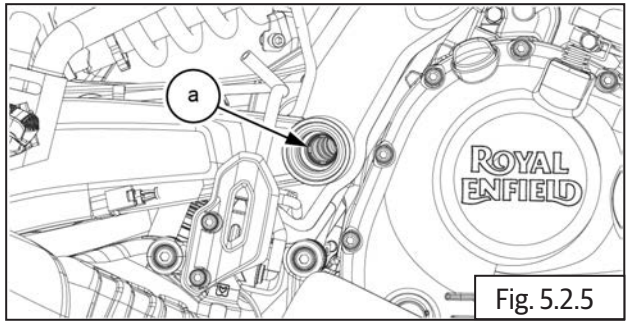

Fig. 5.2.5

SPL	Part No: ST32160/A
	Part Name: Frame Adjuster Swing arm

Torque	3 N-m / 0.3 kgf-m

- Insert Hex head bolt **(a)** with nut **(M10) (b)** into Front LHS main frame. **DO NOT TIGHTEN FULLY.**

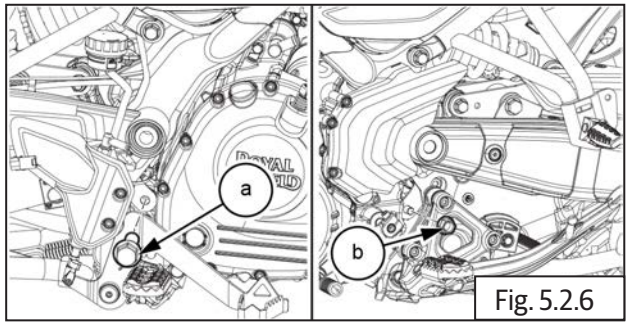

Fig. 5.2.6

	14 mm Socket with Ratchet

- Insert Hex head bolt **(a)** and washers **2 Nos (b)** with nut **(M10) (c)** into Front RHS main frame. **DO NOT TIGHTEN FULLY.**

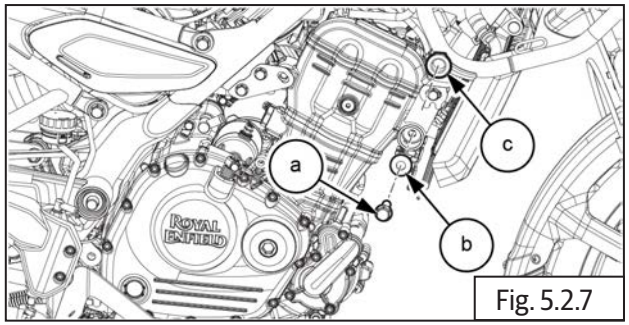

Fig. 5.2.7

	14 mm Socket with Ratchet

- Insert Hex head bolt **(M10) (a)** into Rear LHS engine. **DO NOT TIGHTEN FULLY.**

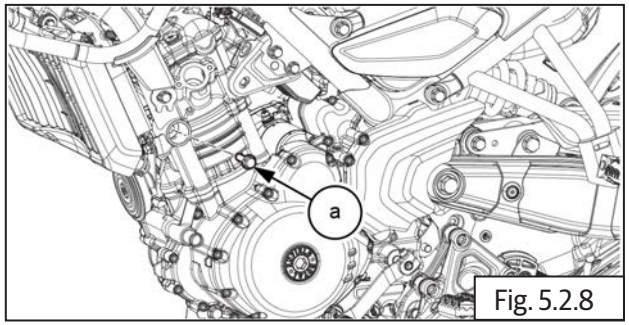

Fig. 5.2.8

	14 mm Socket with Ratchet

- Insert Hex head bolt **(M10) (a)** to LHS and RHS engine. **DO NOT TIGHTEN FULLY**

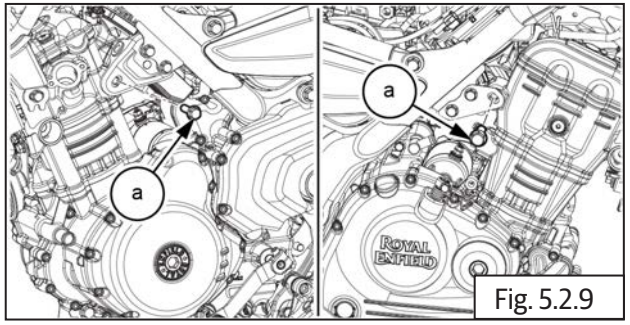

Fig. 5.2.9

	14 mm Socket with Ratchet

- Tighten the Hex head bolt (M10) (a) to LHS and RHS engine.

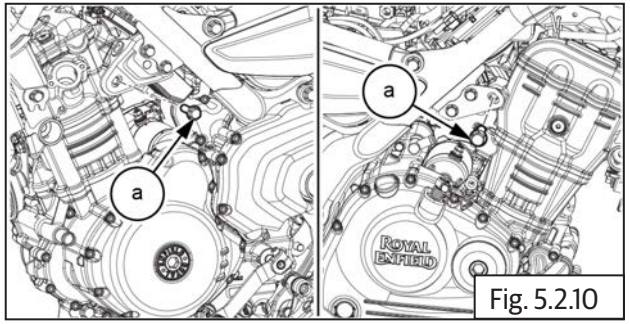

Fig. 5.2.10

	14 mm Socket with Ratchet
Torque	45 N-m / 4.5 kgf-m

- Tighten the Hex head bolt (M10) (a) into Rear LHS engine.

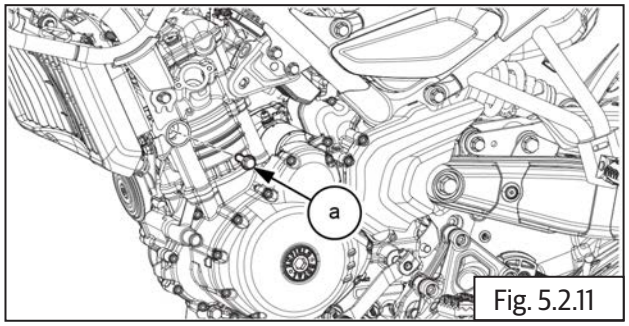

Fig. 5.2.11

	14 mm Socket with Ratchet
Torque	45 N-m / 4.5 kgf-m

- Tighten the Hex head bolt (a) and washers 2 Nos (b) with nut (M10) (c) into Front RHS main frame.

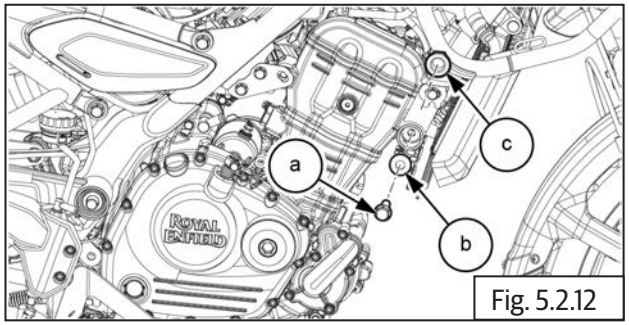

Fig. 5.2.12

	14 mm Socket with Ratchet
Torque	45 N-m / 4.5 kgf-m

- Tighten the Hex head bolt (a) with nut (M10) (b) into Front LHS main frame. **DO NOT TIGHTEN FULLY**

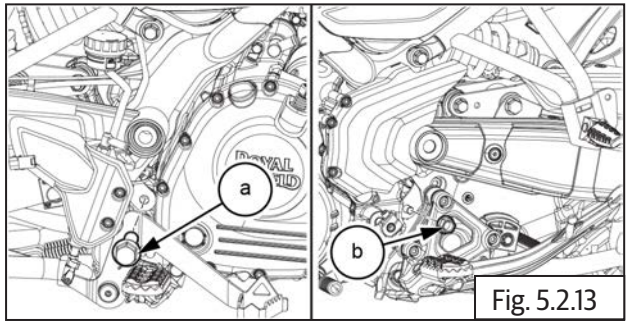

Fig. 5.2.13

	14 mm Socket with Ratchet
Torque	45 N-m / 4.5 kgf-m

- Remove support from engine **(a)**.

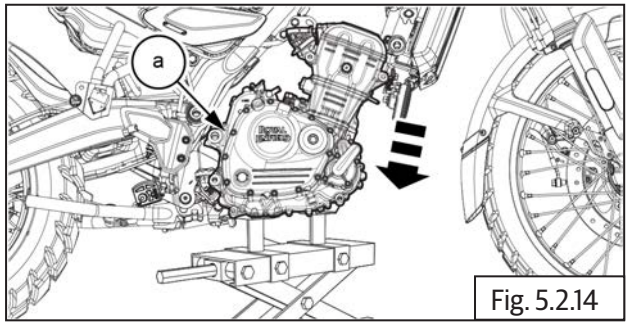

Fig. 5.2.14

5.2.1 Swing Arm

⚠ CAUTION

- *Avoid resting the swing arm onto the CAT box as it will naturally tend to move down during this process..*

- Insert the spindle **(a)** along with the thrust washer **(b)** into the left-hand side.

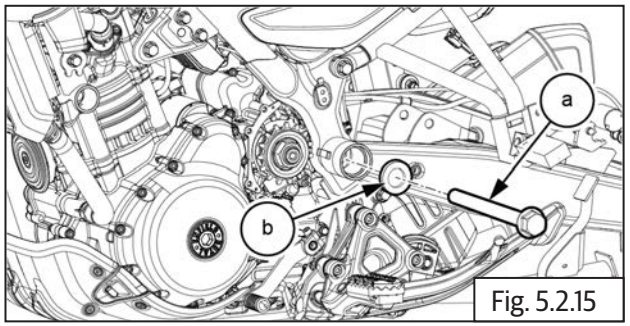

Fig. 5.2.15

- Locate the spindle bolt **(M16) (a)** into the LH side and Tighten the hex nut **(b)** into the RH side.

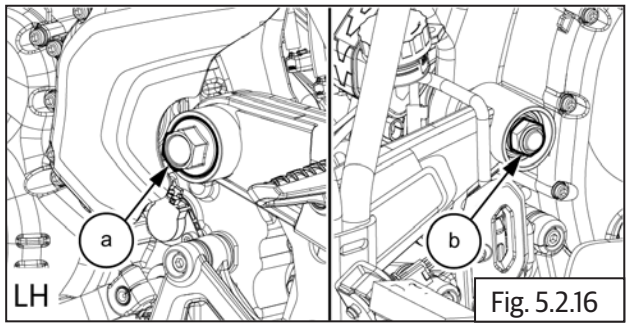

Fig. 5.2.16

	22 mm Socket with Ratchet 24 mm Socket with Ratchet
Torque	100 N-m / 10.0 kgf-m

- Remove pivot cap **(a)** from LHS & RHS swing arm spindle.
- Attach pivot cap to both the LHS and RHS swing arm.

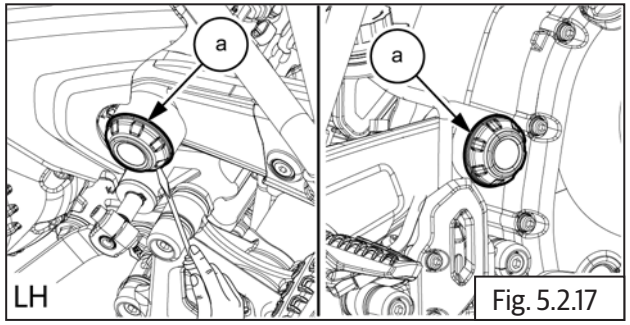

Fig. 5.2.17

5.2.2. Clutch Cable

- Attach the outer lock nut **(a)** into the clutch cable.

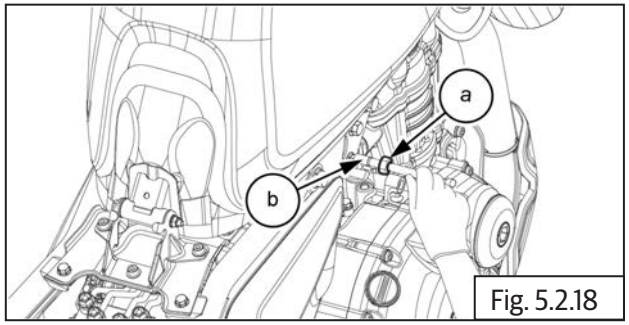

Fig. 5.2.18

	12 mm Socket with Ratchet

- Insert the clutch cable **(a)** into the cable guide **(b)**.

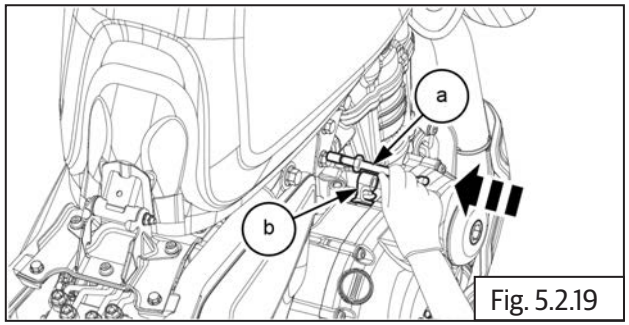

Fig. 5.2.19

- insert the adjuster into the housing cable guide and tighten the inner locknut **(M8) (a)** fully.

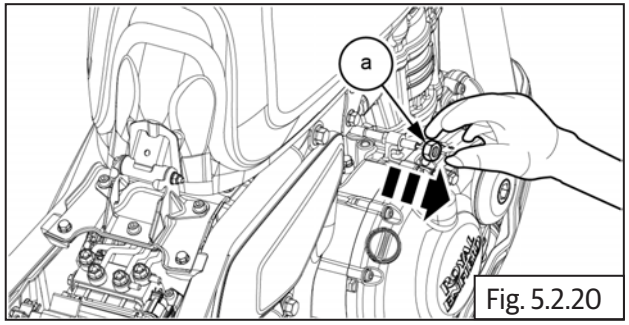

Fig. 5.2.20

	12 mm Socket with Ratchet

- Insert the rubber grommet **(a)** into the clutch cable **(b)**.

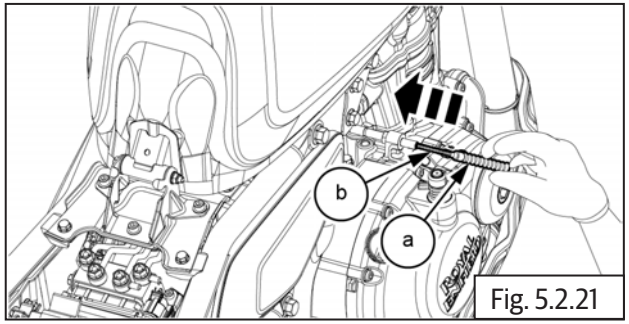

Fig. 5.2.21

- Attach the inner cable **(a** to the clevis **(b)** on the clutch actuating assembly **(c)**..

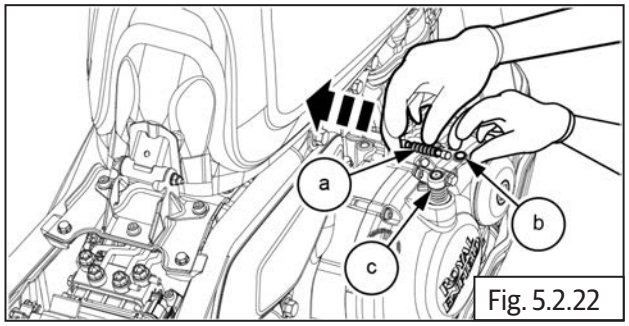

Fig. 5.2.22

- Tighten the outer lock nut **(M8) (a)** at the rear of the cable adjuster **(b)**.

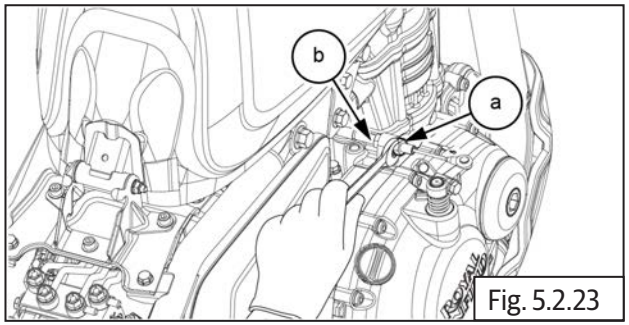

Fig. 5.2.23

	112 mm Double end spanner

- Locate and tighten the nut to self motor main cable **(a)**.

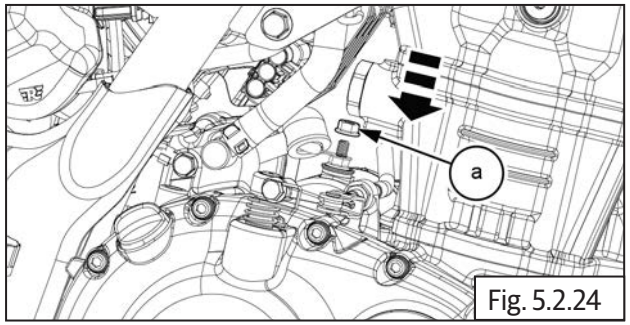

Fig. 5.2.24

	10 mm Socket with Ratchet
Torque	3.5 - 4 N-m / 0.35 - 0.4 kgf-m

5.2.3 Clutch Cable Free Play Adjustment

- Steer handlebar to right hand lock position.

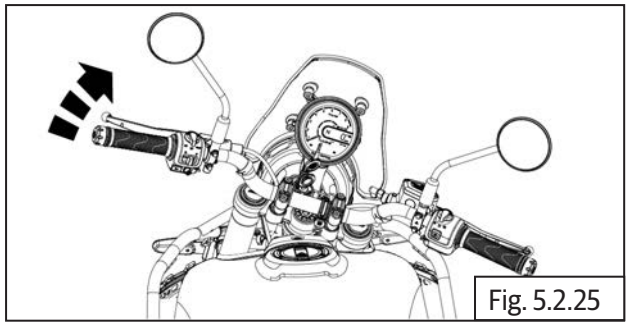
Fig. 5.2.25

- Loosen adjuster nuts **(a)** completely in clutch cable **(b)**.

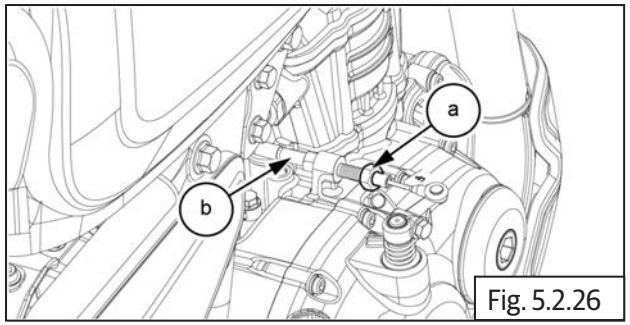

Fig. 5.2.26

	12 mm Double end spanner

- The clutch lever ball end (from its furthest position) before engine engagement.

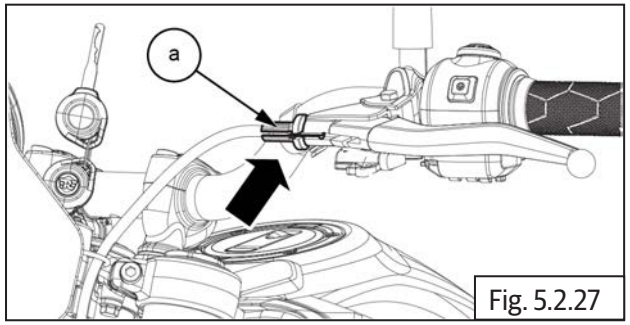

Fig. 5.2.27

- Actuate lever 3 times, check free play of **9-11mm**.

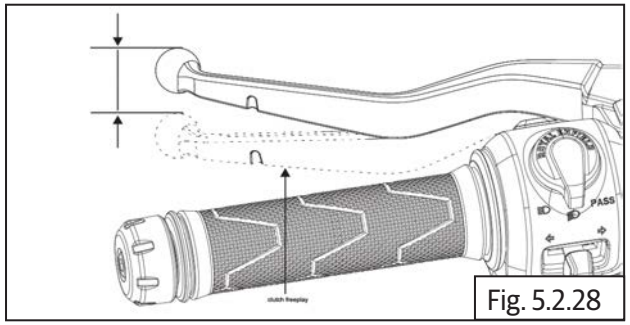
Fig. 5.2.28

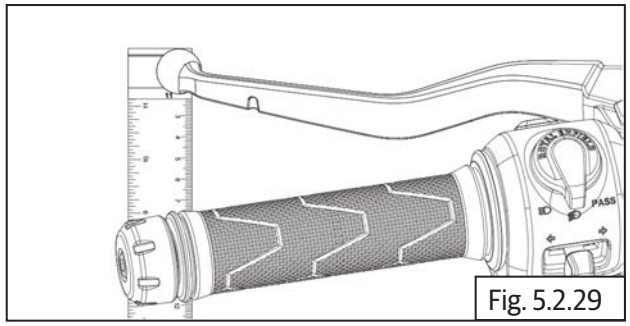
Fig. 5.2.29

- Tighten the nut closest **(a)** to the lifter arm without moving the inner nut.

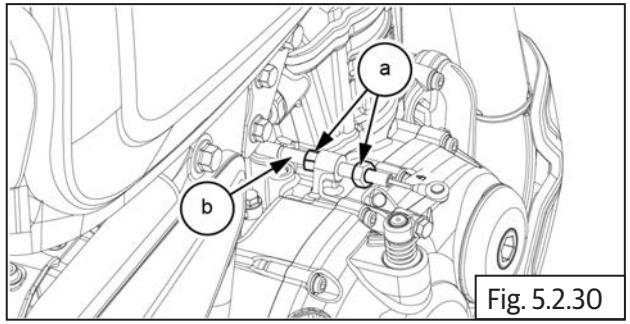

Fig. 5.2.30

- Rotate the handlebar **5 or more times**, returning to a **straight position** and re-check the free play in the lever **9-11mm**. Refer image sequence.

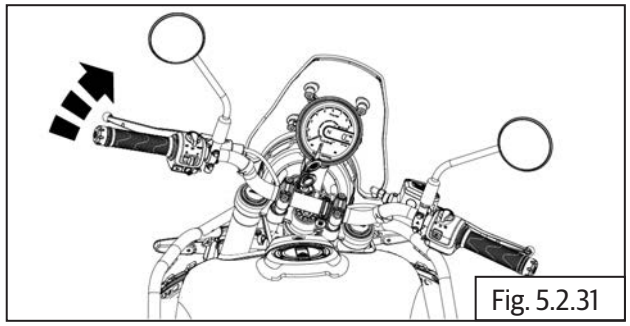
Fig. 5.2.31

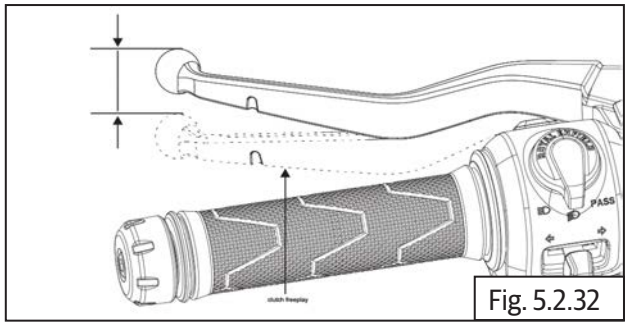
Fig. 5.2.32

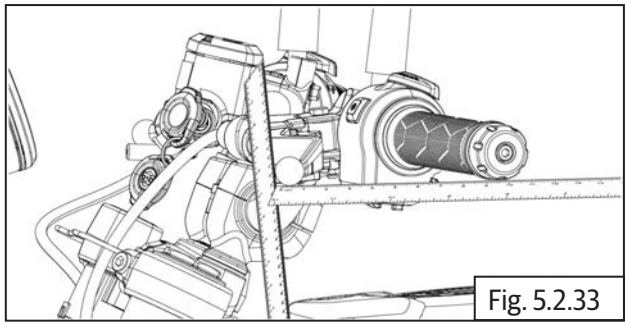
Fig. 5.2.33

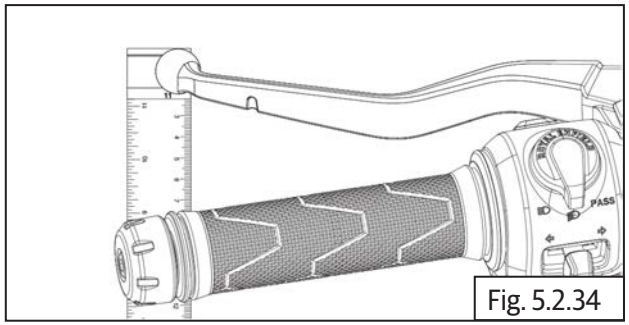
Fig. 5.2.34

- Tighten adjuster nuts **(a)** in clutch cable **(b)** at cover RH to recommended torque.

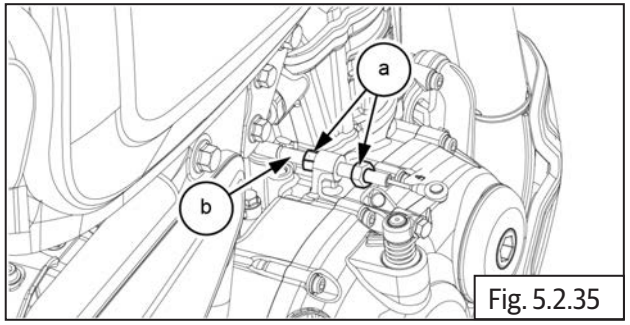

Fig. 5.2.35

	12 mm Double end spanner
Torque	8 Nm / 0.8 kgf-m

5.2.4. Rear Chain To FD Sprocket

- Install the drive chain **(a)** on the sprocket.

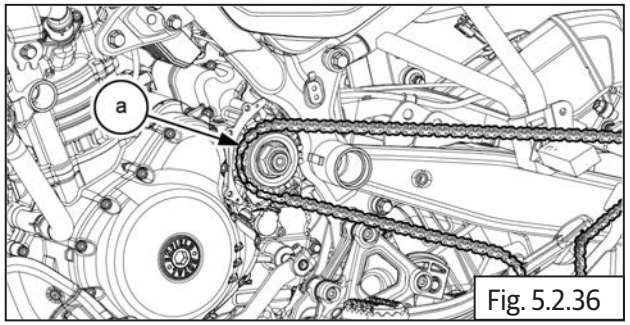

Fig. 5.2.36

5.2.5. Drive Chain Free Play Adjustment

- Vehicle will be placed on the center stand and in neutral gear, ensuring the rear wheel is clear of the ground.

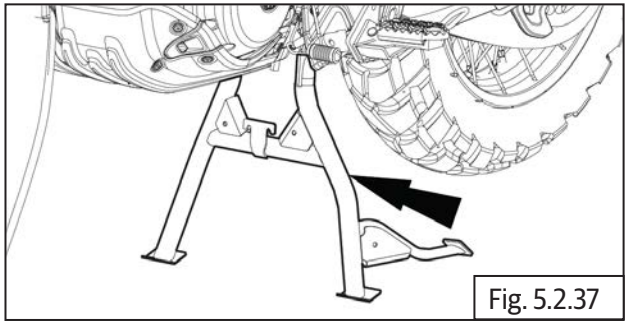

Fig. 5.2.37

- Rotate the wheel until find a position, where the chain slackness is at its lowest / tightest.
- Push the chain upward and downward at the measurement location.

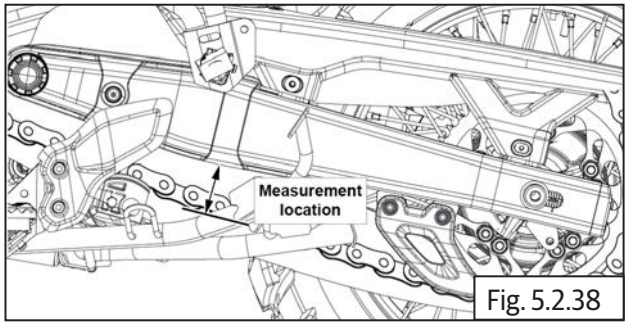

Fig. 5.2.38

- Measure how far the chain moves from the swingarm.

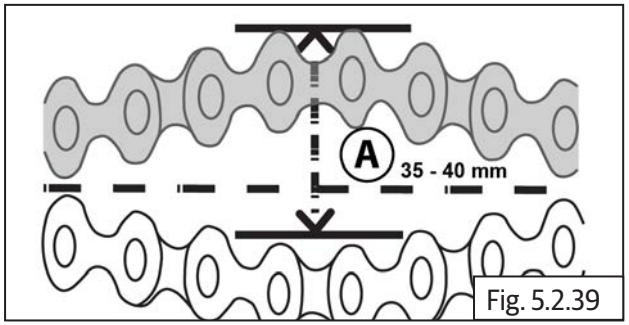

Fig. 5.2.39

- Inspect chain free play at locations using a ruler. Free play for drive chain should be 35 mm to 40 mm.

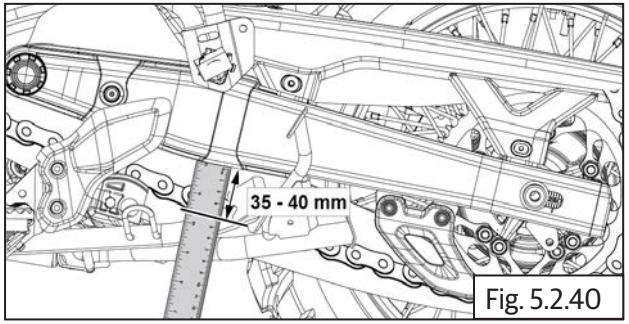

Fig. 5.2.40

- If the free play of the drive chain is not between 35 mm to 40 mm then hold spindle **(a)** on LH using a tommy bar and loosen **(M16) (b)** nut on RH.

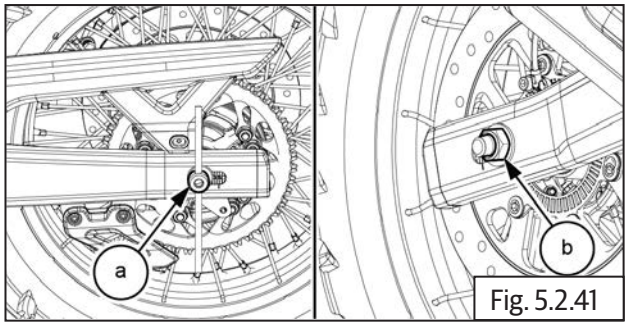

Fig. 5.2.41

	24 mm Ring spanner and Tommy bar

- Push the rear wheel to the extreme front in the swingarm slot.
- To reduce free play tighten the adjuster bolt (M8) **(a)** and **(b)** in both LHS and RHS.

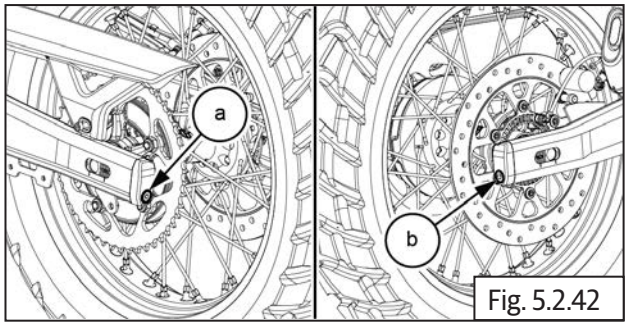

Fig. 5.2.42

	6 mm Allen Key

- Ensure the lines are matched with the lines punched in swing arm on both LH **(a)** & RH **(B)** side for proper wheel alignment.

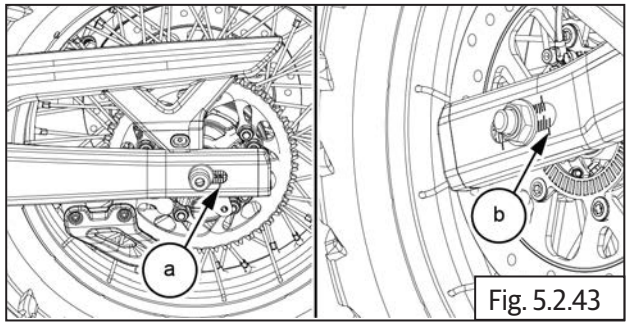

Fig. 5.2.43

- Now measure the drive chain free play using ruler and it should be 35 mm to 40 mm.

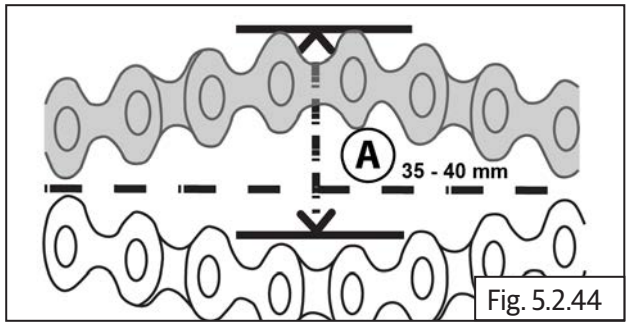

Fig. 5.2.44

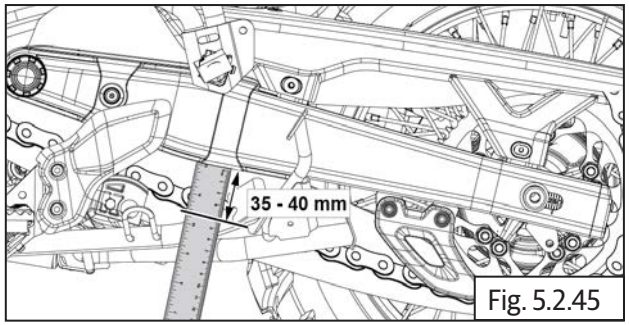

Fig. 5.2.45

⚠ CAUTION
Chain slackness beyond 40 mm will lead to chain slippage or breakage.

- Once chain free play is verified, hold spindle LH with tommy bar **(a)** and tighten the wheel axle nut **(M16) (b)**.

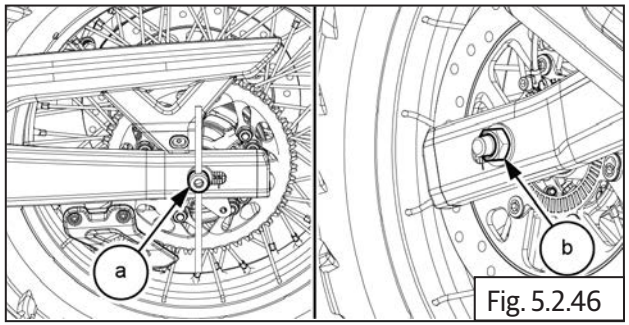

Fig. 5.2.46

	24 mm Ring spanner and Tommy bar
Torque	70 N-m/7.0 kgf-m

- Tighten the adjuster bolt **(M8) (a)** and **(b)** to both LHS and RHS.

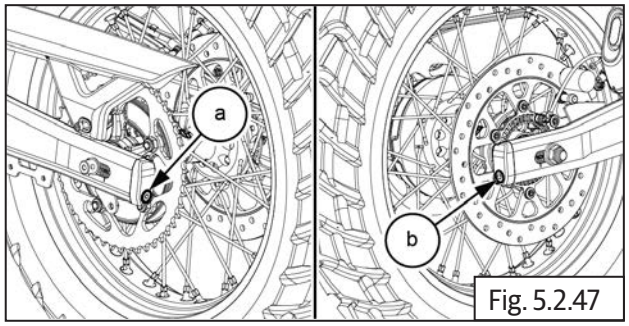

Fig. 5.2.47

	6 mm Allen Key
Torque	25 N-m / 2.5 kgf-m

5.2.6. FD Sprocket Cover

- Assemble FD sprocket cover **(a)** on crankcase LH.

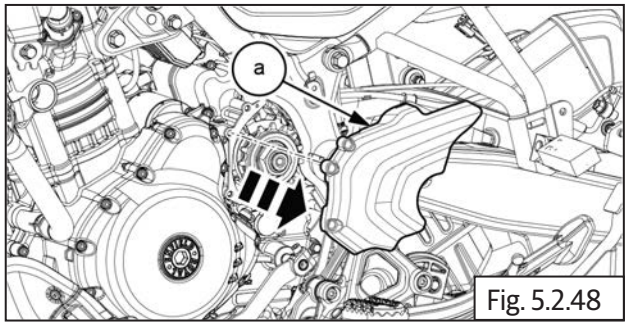

Fig. 5.2.48

- Locate 3 Nos. Hex socket head bolts **(M6) (a)** on FD sprocket cover and tighten in a crisscross pattern to specified torque.

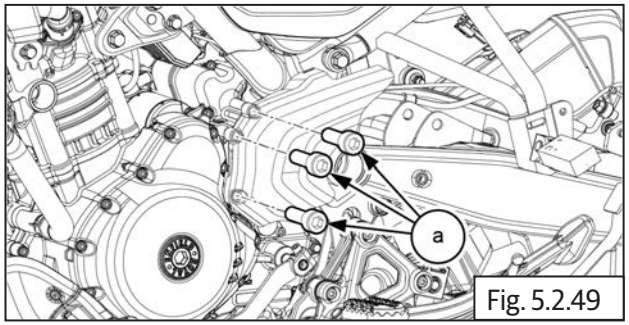

Fig. 5.2.49

	5 mm Allen Socket with Ratchet
Torque	10 - 12 Nm / 1.0 - 1.2 kgf-m

5.2.7. RR Unit

- Connect 2 Nos electrical connectors **(a)** on RR unit .

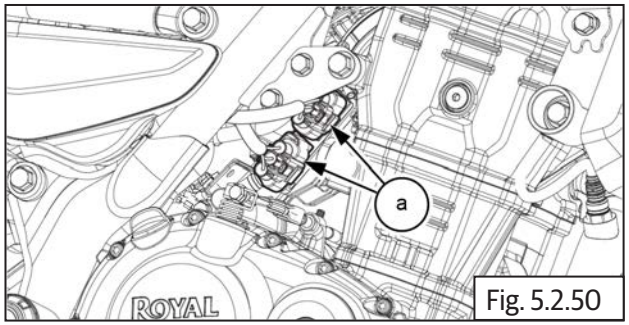

Fig. 5.2.50

5.2.8. Engine Coolant Temperature Sensor

- Coolant temperature sensor located on rear side of cylinder head.
- Connect coolant temperature sensor coupler **(a)**.

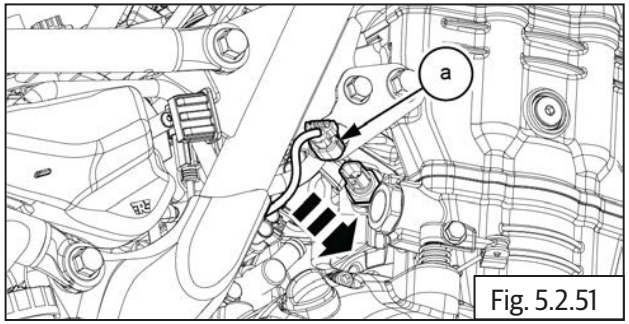

Fig. 5.2.51

5.2.9. Oil pressure switch connector.

- Connect the oil pressure switch coupler **(a).**

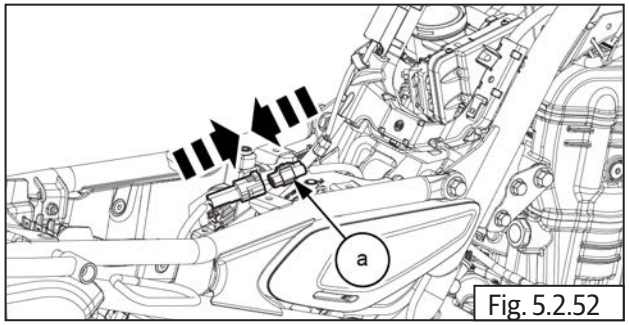

Fig. 5.2.52

5.2.10. Fuel Injector connector.

- Connect the fuel injector coupler **(a).**

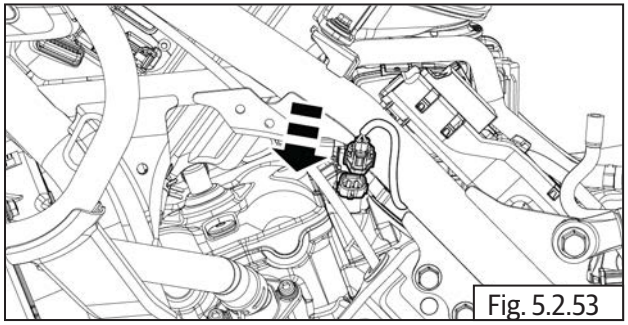
Fig. 5.2.53

5.2.11. EMS Throttle Body

- Attach the EMS throttle body **(a)** to the transition piece.

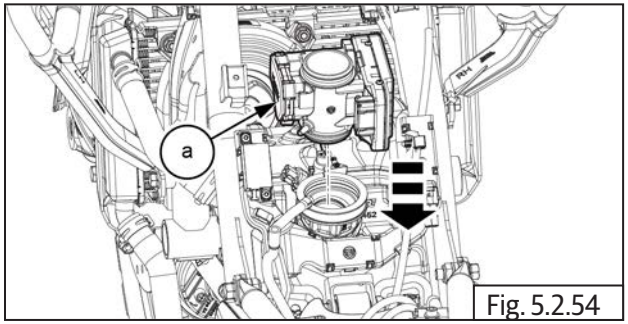

Fig. 5.2.54

- Connect the EMS throttle body **(b)** to the transition piece by tightening the worm clip screws **(M5) (a)**.

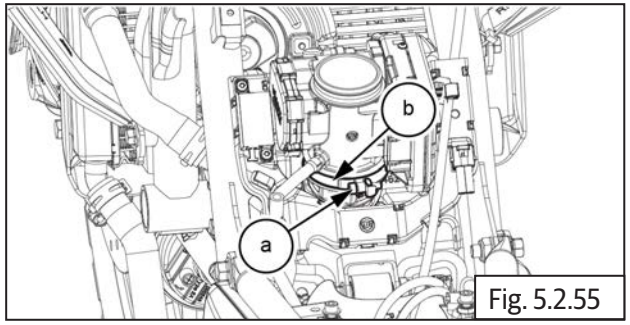

Fig. 5.2.55

	4 mm Allen socket with ratchet
Torque	2.5±0.5 N·m / 0.2 ± 0.05 kgf m

- Connect the coupler to the ECU..

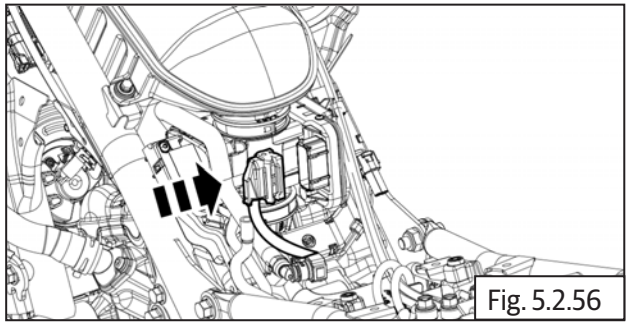
Fig. 5.2.56

- Connect the EVAP hose **(a)** to the throttle body.

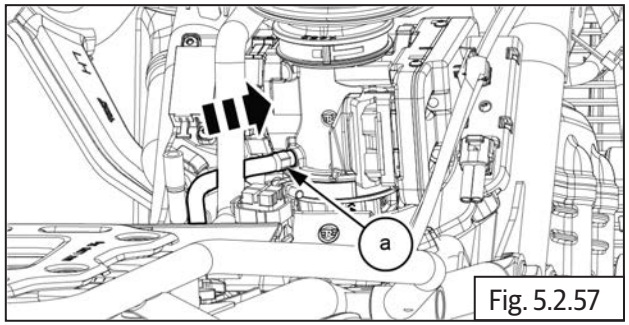

Fig. 5.2.57

5.2.12. Canister

- Locate the canister bracket **(a)** on chassis frame.

Fig. 5.2.58

- Fix the coupler clip **(a)** on canister bracket.

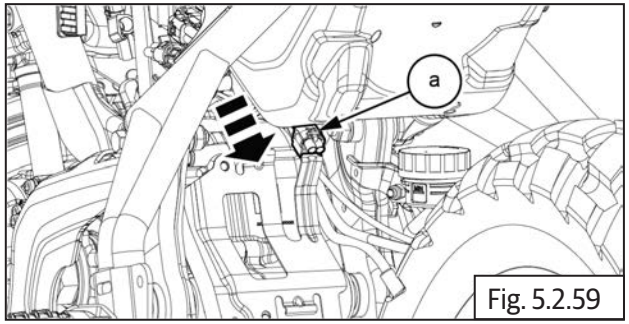

Fig. 5.2.59

- Locate and tighten the flange head bolts **2 Nos (M6) (a)** on canister bracket.

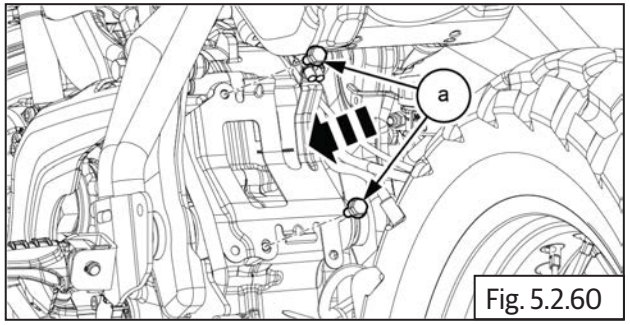

Fig. 5.2.60

	10 mm Socket with Ratchet
Torque	10 N·m /1.0 kgf m

- Locate and place the canister with hose assembly **(a)** on chassis frame.

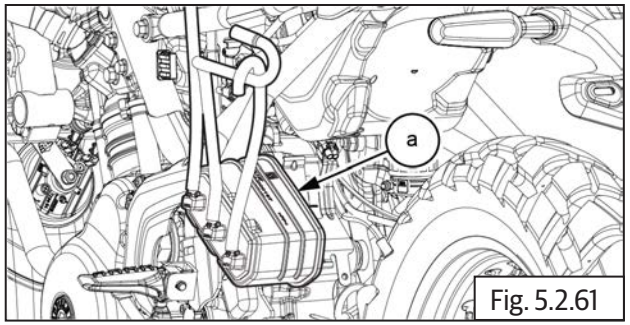

Fig. 5.2.61

NOTE
• *Please ensure the EVAP hoses are routed properly and ensure they DO NOT get pinched or damaged.*

- Fix the strap **(a)** on canister.

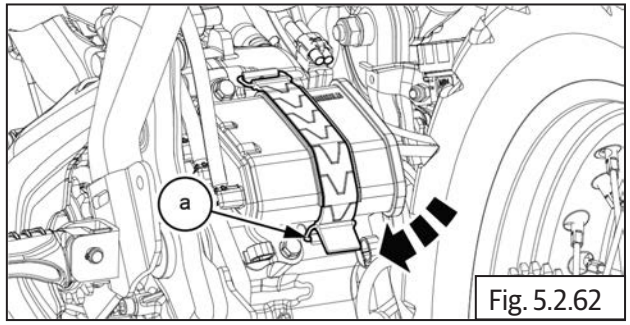

Fig. 5.2.62

- Locate the wire guide **(c)** on chassis frame .
- Locate and tighten the screw **(T40) (a)** with washer **(b)** on wire guide.

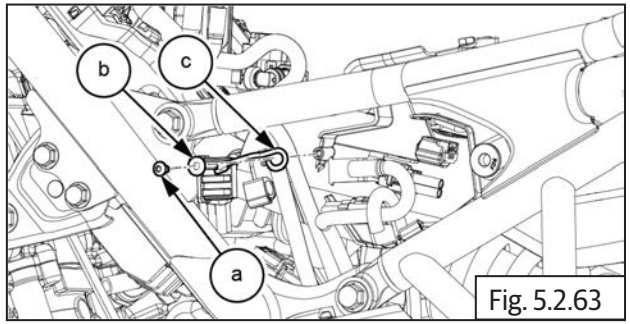

Fig. 5.2.63

	3mm Allen key
Torque	1.5 N·m / 0.15 kgf m

5.2.13 Wiring harness bracket

- Locate the clip bracket **(b)** to the engine.
- Tighten 1 Nos. Hex socket head bolts **(M6) (a)** onto the clip bracket **(b)**.

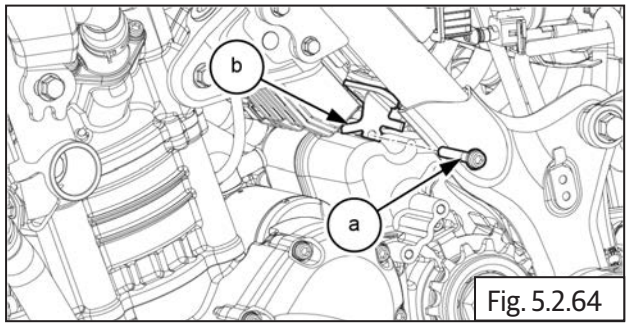

Fig. 5.2.64

	5 mm Allen key with Ratchet
Torque	10-12 N·m / 1.0 - 1.2 kgf m

5.2.14. Exhaust Pipe

- Locate exhaust Copper Gasket **(a)** into cylinder head.

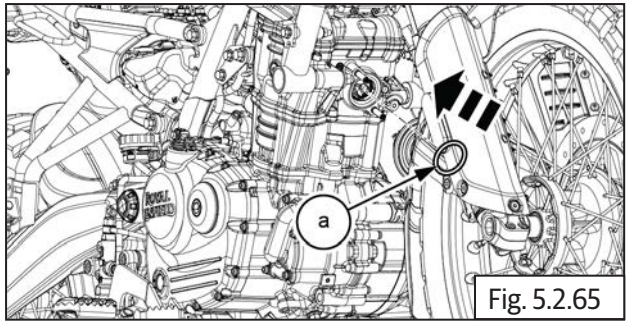

Fig. 5.2.65

- Locate the gasket **(a)** into exhaust pipe .

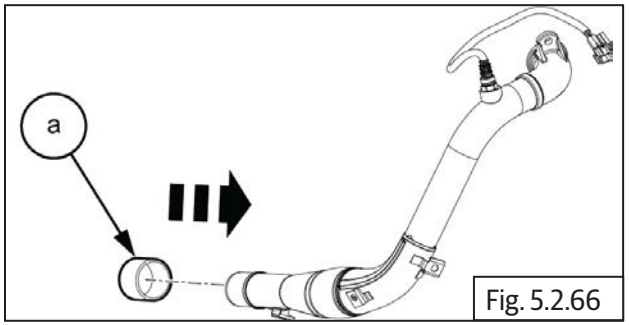

Fig. 5.2.66

- Locate exhaust pipe **(a)** into cylinder head and ensure the exhaust pipe flange is properly located on the studs.

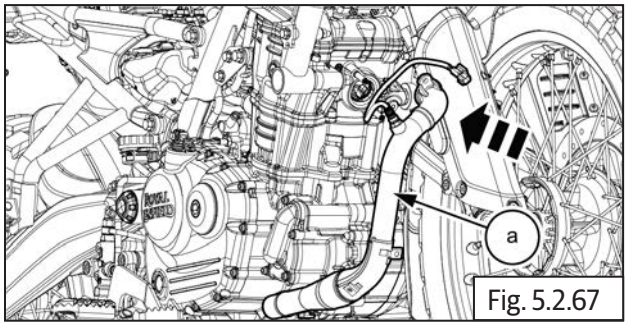

Fig. 5.2.67

- Assemble 2 Nos flange nuts **(M8) (a)** on the studs and hand tight it to align the rear end mounting.

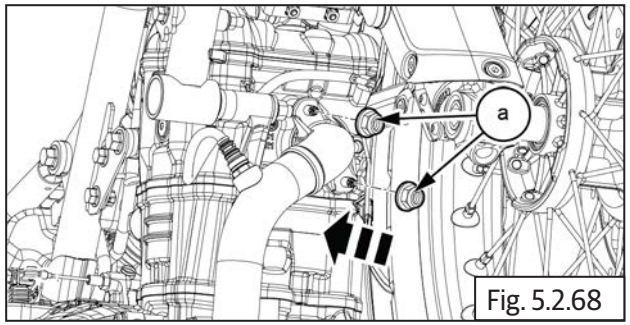

Fig. 5.2.68

	12 mm socket with ratchet
Torque	25 N-m/2.5 kgf-m

- Locate the guard **(a)** with bolts on the exhaust pipe ensure holes aligned.

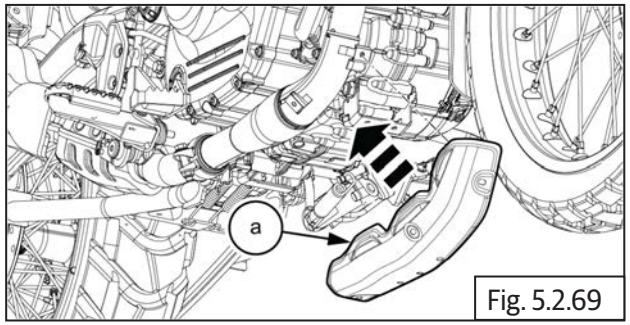

Fig. 5.2.69

- Tighten 3 Nos button head bolts **(M6) (a)** on exhaust pipe guard.

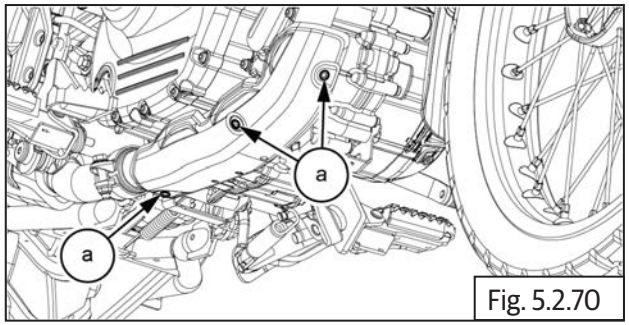

Fig. 5.2.70

	4mm Allen key
Torque	11 N-m/1.1 kgf-m

5.2.15. O2 Sensor / Oxygen Sensor Connectors (Front)

- Connect oxygen sensor connector **(a)**

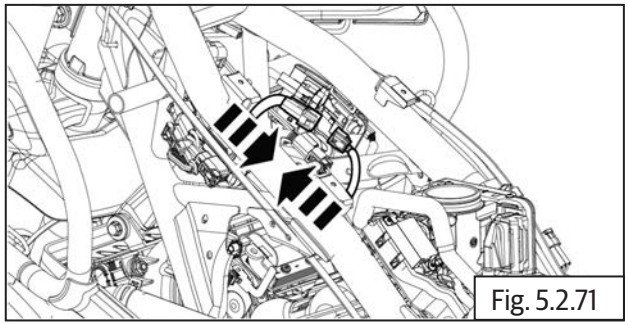
Fig. 5.2.71

- Fix the 1 Nos omega clips **(a)** on Oxygen Sensor wiring harness.

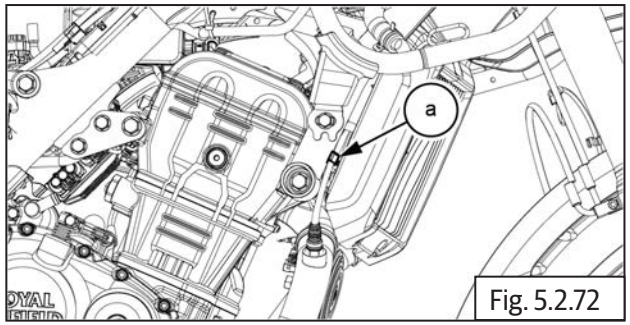

Fig. 5.2.72

5.2.16 Radiator

- Install the radiator with hoses **(a)** on engine.

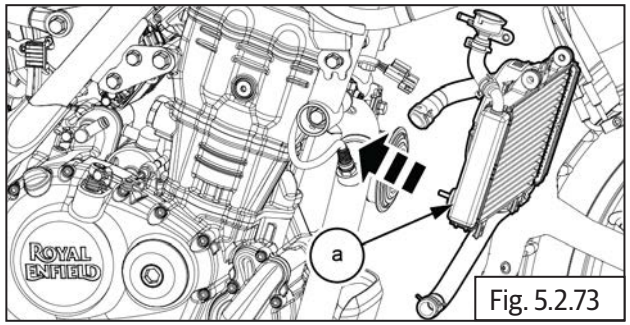

Fig. 5.2.73

- Locate and tighten the 1 Nos bolts **(M6) (a)** on top of the radiator.

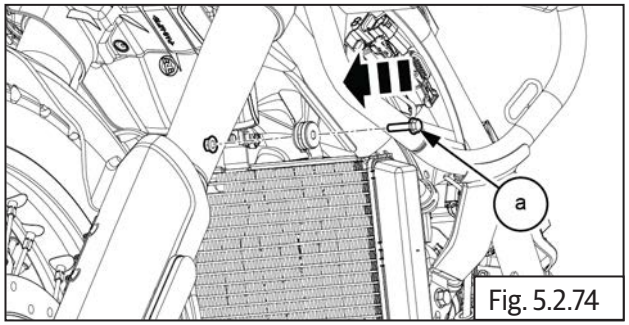

Fig. 5.2.74

	10 mm Socket with Ratchet
Torque	8-10 N-m / 0.8-1.0 kgf-m

- Locate and tighten 1 Nos bolts **(M6) (a)** on bottom of the radiator.

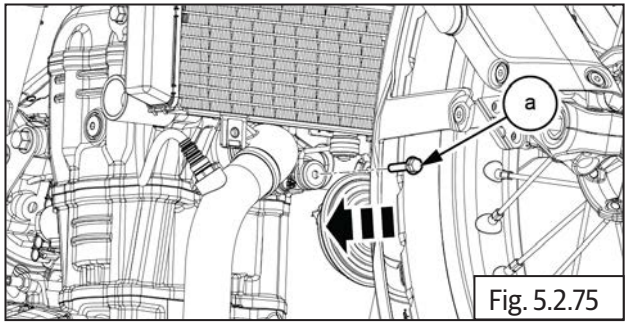

Fig. 5.2.75

	10 mm Socket with Ratchet
Torque	8-10 N-m / 0.8-1.0 kgf-m

- Locate the guard **(a)** on radiator.

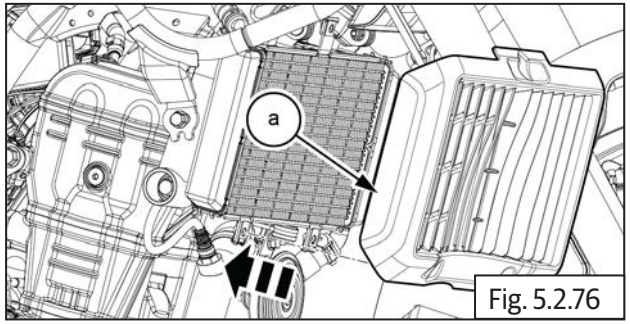

Fig. 5.2.76

- Locate and tighten the 3 Nos bolts **(M6) (a)** from radiator guard.

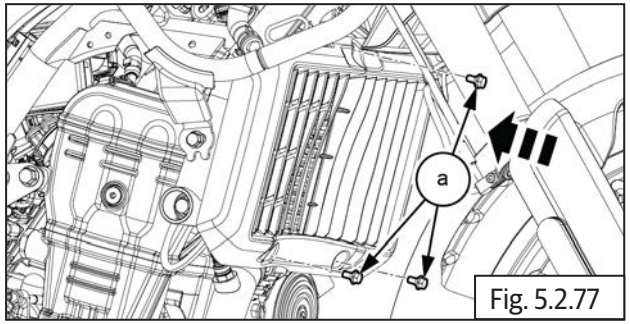

Fig. 5.2.77

	10 mm Socket with Ratchet
Torque	2-4 N-m / 0.2-0.4 kgf-m

- Install the hose **(a)** on thermostat housing.

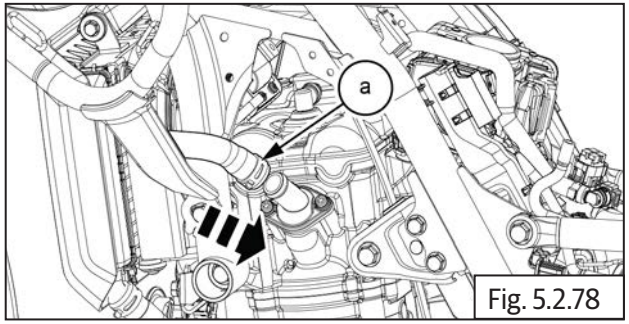

Fig. 5.2.78

- Fix the clamp **(a)** on engine outlet hose.

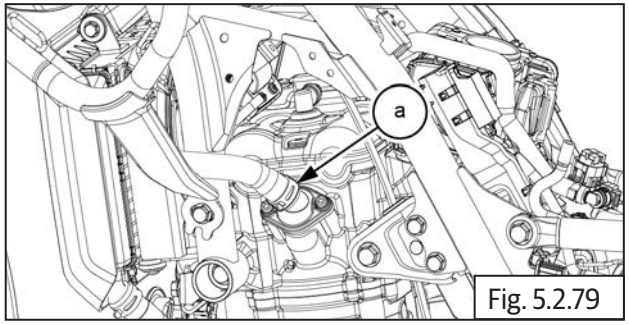

Fig. 5.2.79

	Plier

- Install the hose **(a)** on engine.

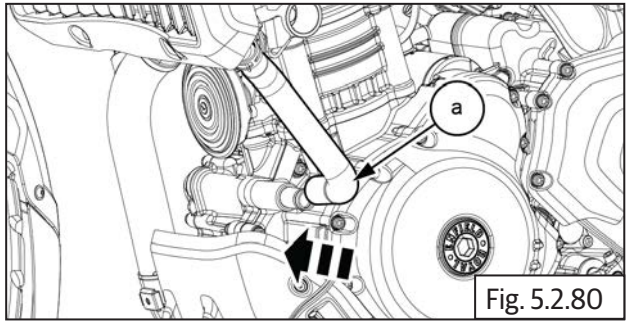

Fig. 5.2.80

- Fix the clamp **(a)** on engine inlet hose.

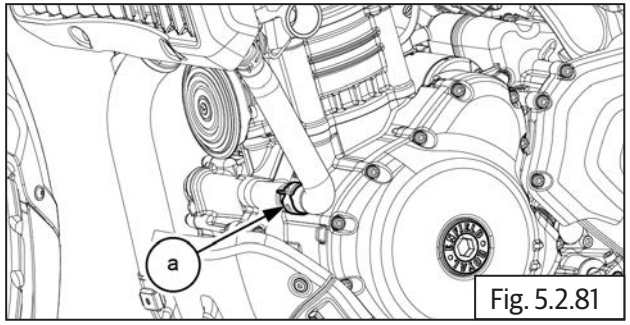

Fig. 5.2.81

	Plier

- Locate and tighten the 1 Nos bolt **(M6) (a)** on filler neck.

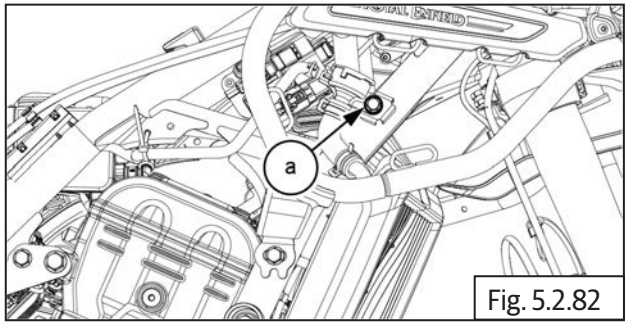

Fig. 5.2.82

	10 mm Socket with Ratchet
Torque	8 to 10 N·m / 0.8 to 1.0 kgf-m

- Connect the cooling fan coupler **(a)**.

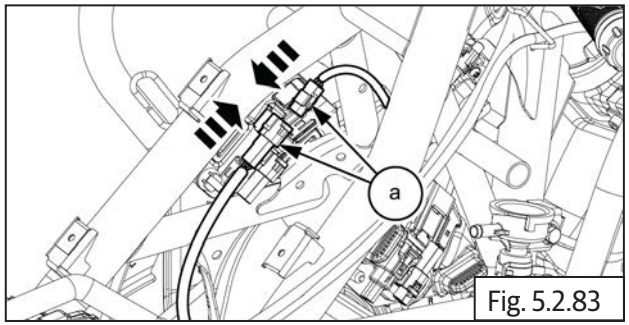

Fig. 5.2.83

5.2.17. Air Filter Box Assembly

- Locate the air filter box **(a) with** ignition coil on front chassis frame.

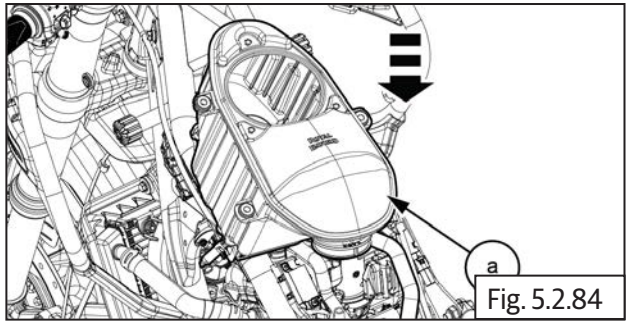

Fig. 5.2.84

- Connect the **2 Nos** ignition coil couplers **(a)**.

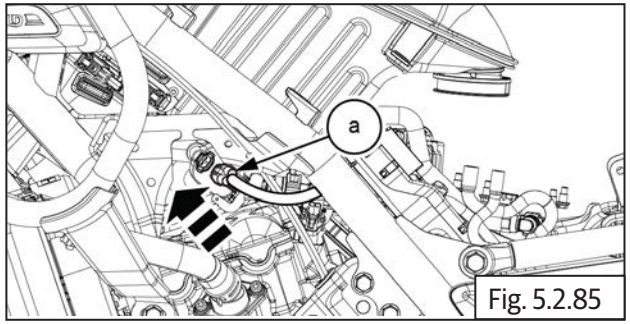

Fig. 5.2.85

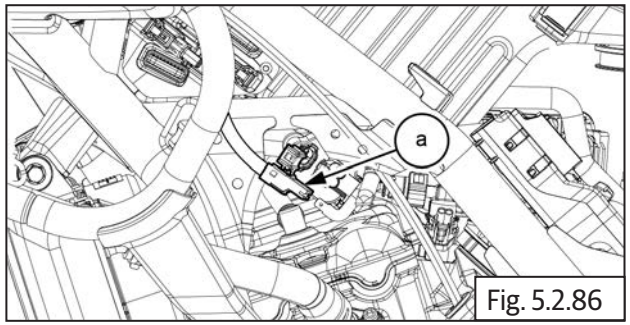

Fig. 5.2.86

- Connect spark plug cap **(a)** on engine.

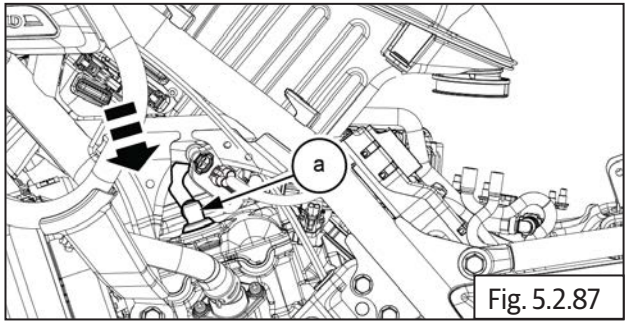

Fig. 5.2.87

- Fix **3 Nos** sleeves **(a)** with grommets **(b)** on air filter box.

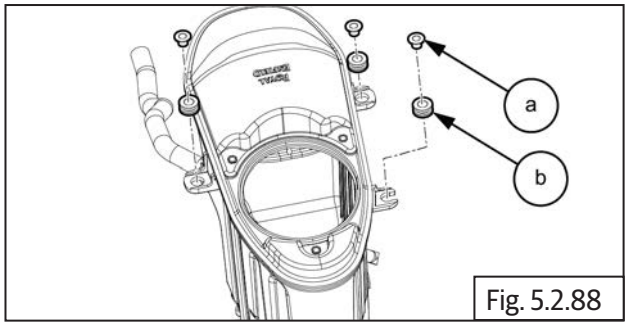

Fig. 5.2.88

- Locate and tighten **3 Nos** Hex flange bolts **(a) (M6)** on air filter box.

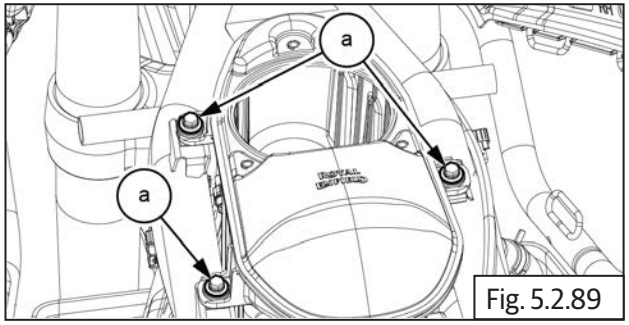

Fig. 5.2.89

	8 mm socket with ratchet
Torque	3 to 4 N·m / 0.3 to 0.4 kgf-m

- Fix the clamp **(a)** on air filter bellow hose.

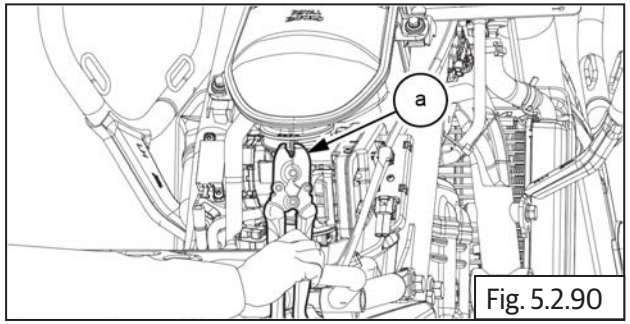

Fig. 5.2.90

	Clamp Removal and install tool

- Connect the breather hose **(a)** to engine.

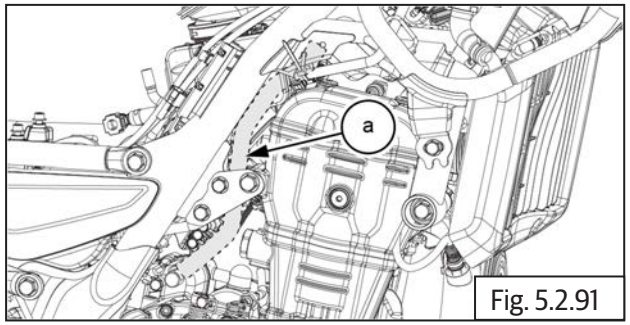

Fig. 5.2.91

- Fix the clamp **(a)** to bottom breather hose.

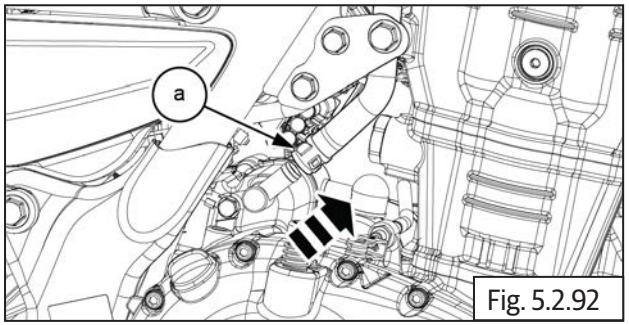

Fig. 5.2.92

	Plier

5.2.18 . Gear Pedal.

- Attach the gear pedal **(a)** to the gear shift shaft.

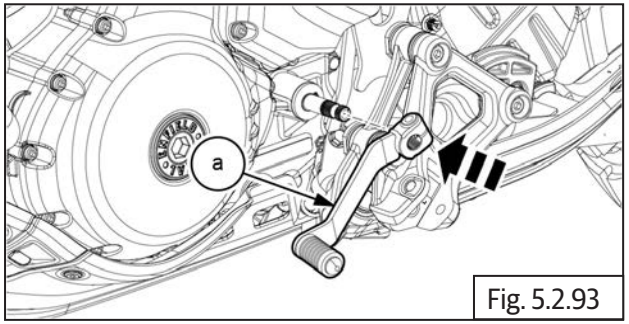

Fig. 5.2.93

- Gear pedal slot should be match to dot punch mark.

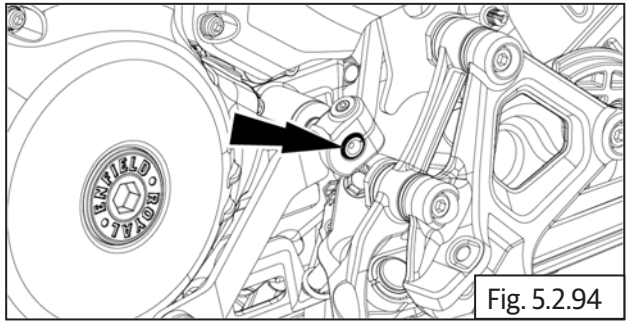

Fig. 5.2.94

- Tighten the cap bolt **M6 (a)** onto the gear pedal.

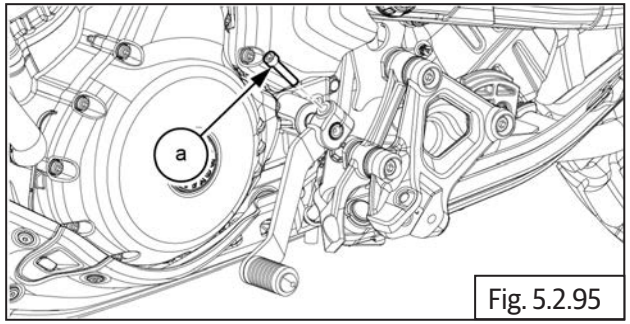

Fig. 5.2.95

	5mm Allen socket with ratchet
Torque	15 N·m / 1.5 kgf-m

5.2.19 . Drain Plug

NOTE
• *Ensure the motorcycle is upright on a firm and flat surface.*

- Install the 2 Nos strainers **(a)** with "O" Rings **(b)** into the LHS oil sump.

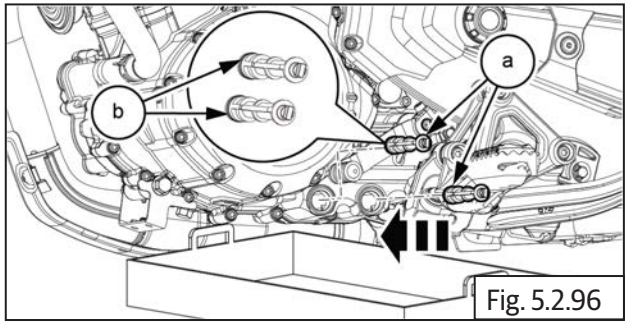

Fig. 5.2.96

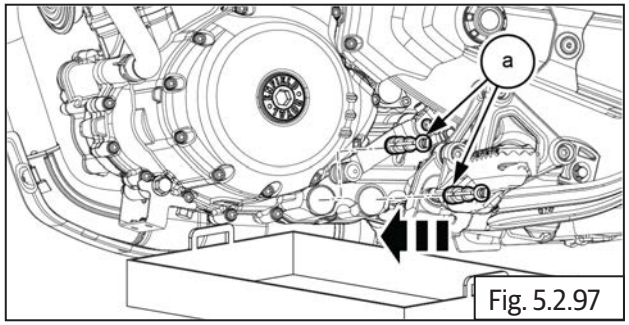

Fig. 5.2.97

NOTE
• **Do not reuse the "O" Rings, Renew all "O" Rings**.
• *Lubricate "O"-Rings with engine oil.*

⚠ **CAUTION**
• **Strainers should be pushed by hand to fully engage "O"rings in bores before assembling drain plugs.**
• **Drain plugs SHOULD NOT be used to assemble strainers.**

	Engine oil

- Install and Tighten 2 Nos drain plugs **(a)** along with "O" Rings **(b)** into the LHS oil sump.

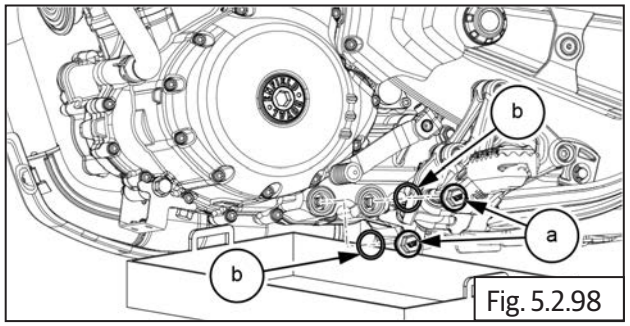

Fig. 5.2.98

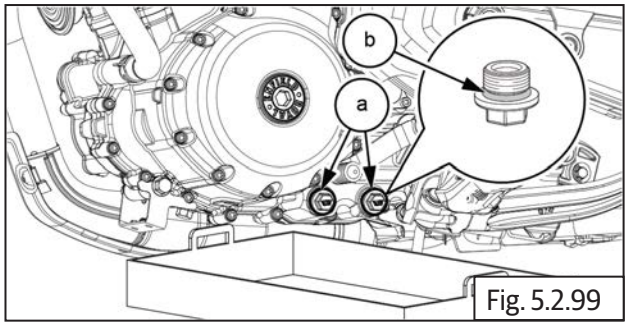

Fig. 5.2.99

NOTE
• **Do not reuse the "O" Rings, Renew all "O" Rings**. • *Lubricate "O"-Rings with tyre lube or P-80 emulsion*

	Tyre lube or P-80 emulsion

	17 mm Socket with Ratchet
Torque	12 to 14 N·m -/1.2 to 1.4 kgf-m

- Refill engine oil with recommended quantity.

Dry Fill	2.4 L / 0.52 Imperial gallon
Refill	2.1 L / 0.46 Imperial gallon for oil service (Including filter change)
Grade	10W40 API SN, JASO MA2, Semi Synthetic

- Tighten and install oil filler cap **(a)** onto the crankcase top on the RH side.

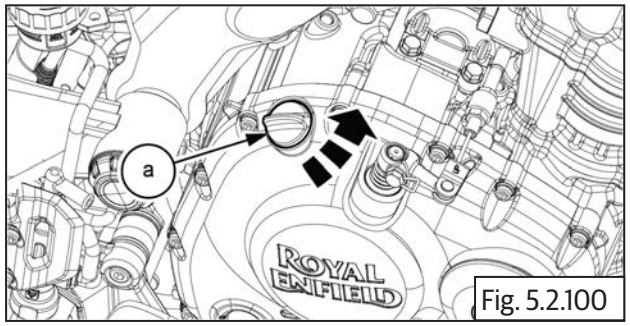

Fig. 5.2.100

	Adjustable plier with soft jaws

- Check oil level through oil level window
- Engine oil level should be close to "MAX" condition.

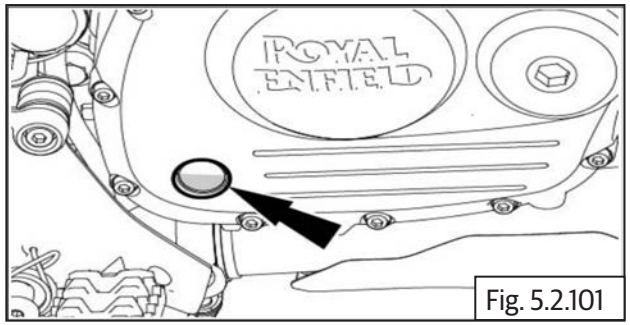

Fig. 5.2.101

5.2.20 Radiator coolant filling

⚠ WARNING
Danger of scalding During motorcycle operation, the coolant gets very hot and is under pressure. **Do not remove the radiator cap, radiator hoses or other cooling system components when the engine is hot. Allow the engine and cooling system to cool down. In case of scalding, rinse immediately with lukewarm water.**

⚠ WARNING

Danger of poisoning

Coolant is poisonous and a health hazard. Coolant must not come into contact with the skin, eyes, or clothing. If contact occurs with the eyes, rinse with water immediately and contact a physician. Immediately clean contaminated areas on the skin with soap and water. If coolant is swallowed,contact a physician immediately. Change clothing that is contaminated with coolant. Keep coolant out of reach of children.

- Ensure motorcycle engine is cold.
- Place the motorcycle in an upright position on a flat level surface.

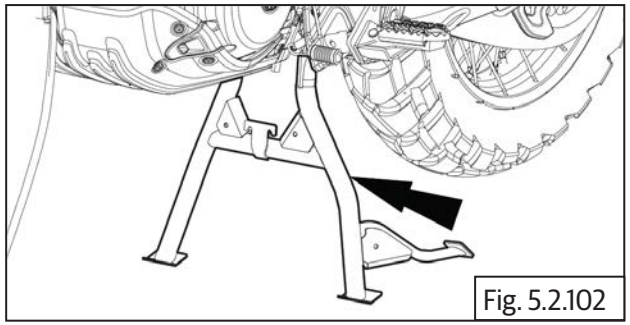

Fig. 5.2.102

- Once drained, replace copper washer **(b)** with a new part and tighten bolt **(M6) (a)** on RHS water pump cover.

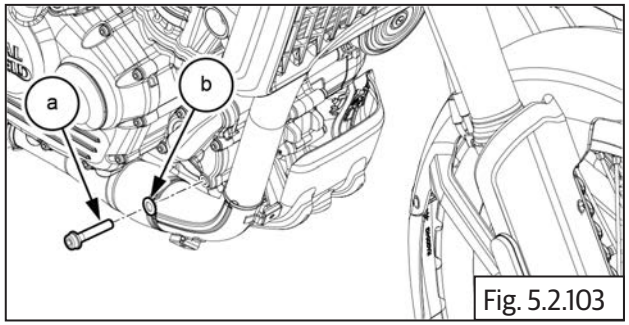

Fig. 5.2.103

	5mm Allen Socket with Ratchet
Torque	8-12 N-m / 0.8-1.2 kgf-m

- Remove the radiator pressure cap **(a)**.

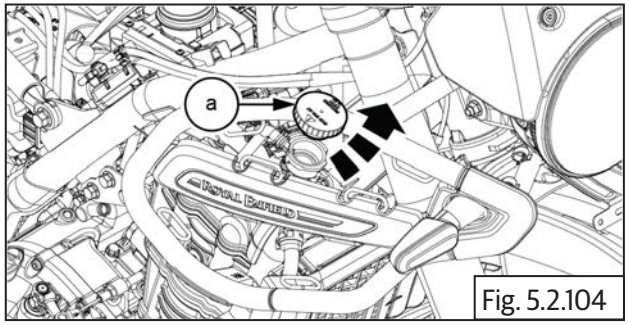

Fig. 5.2.104

- Fill the system with recommended coolant up to the filler neck.

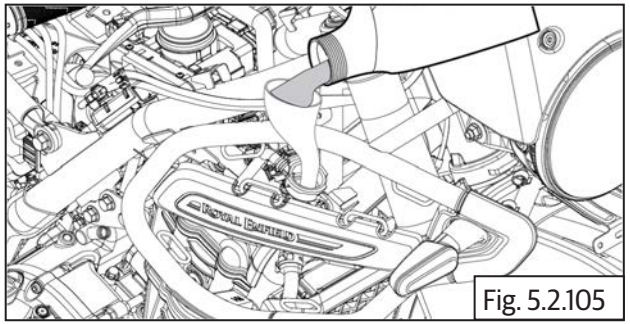

Fig. 5.2.105

Grade	TOTAL COOLELF AUTO SUPRA -37°C
QTY	930ml±15ml

- Close the radiator pressure cap **(a)** ensuring it is correctly fitted & fully tightened clockwise.

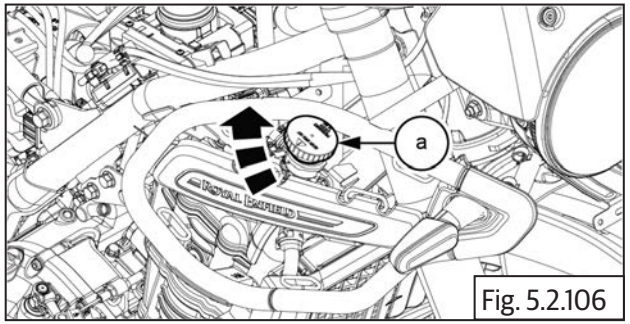

Fig. 5.2.106

- Remove the radiator expansion tank cap **(a)**.

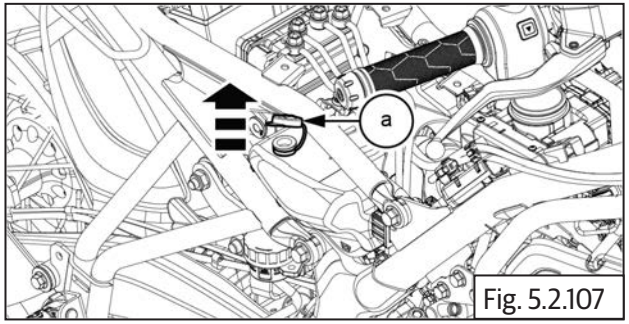

Fig. 5.2.107

- Fill the recommended coolant to the upper level line.

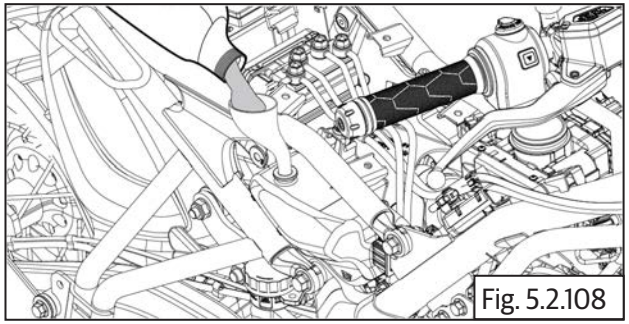
Fig. 5.2.108

Grade	TOTAL COOLELF AUTO SUPRA -37°C
QTY	190ml to210ml

- Close the radiator expansion tank cap **(a)**.

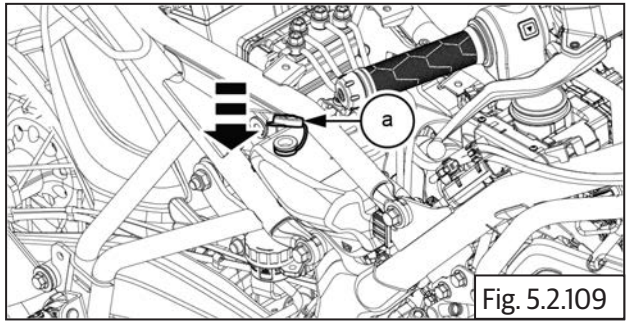

Fig. 5.2.109

5.2.21 Air Bleeding

⚠ CAUTION

Do not run the engine without completing the filling procedure above.

- Remove the radiator pressure cap **(a)**.

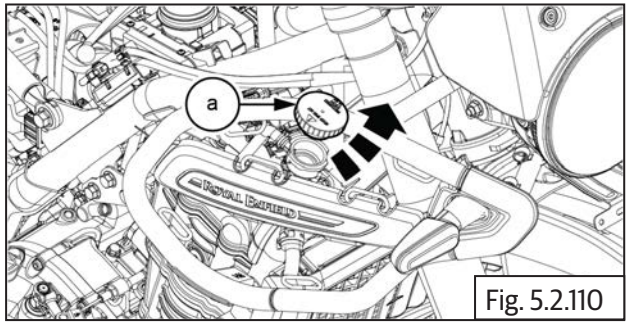

Fig. 5.2.110

- Fill the system with recommended coolant up to the filler neck.

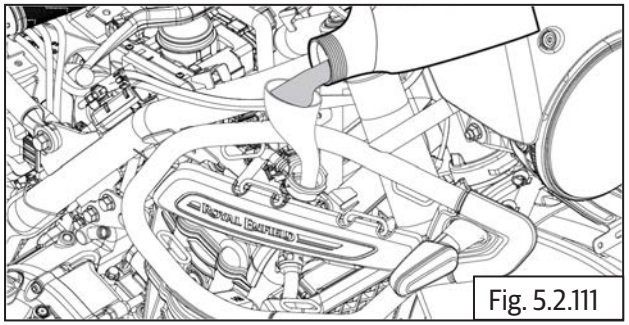
Fig. 5.2.111

Grade	TOTAL COOL ELF AUTO SUPRA -37°C

- **(A)** Gently tap and squeeze both engine to radiator bottom hose **(a)**.

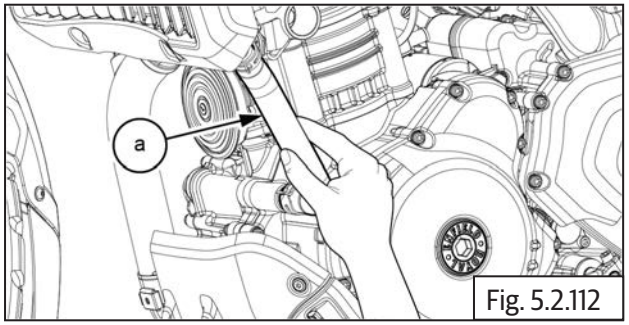

Fig. 5.2.112

- Gently tap and squeeze both engine to radiator top hose **(a)**.

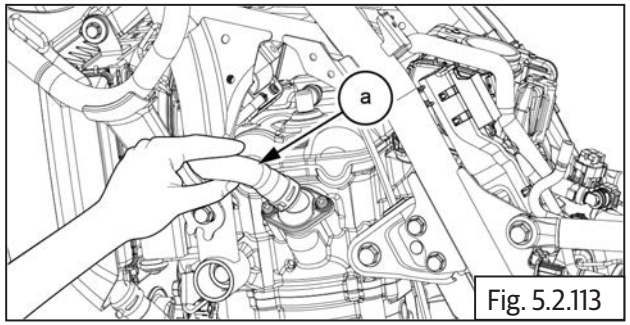

Fig. 5.2.113

- **(B)** Tip the bike to approx 45-60 degree angle on the left and then the right side.

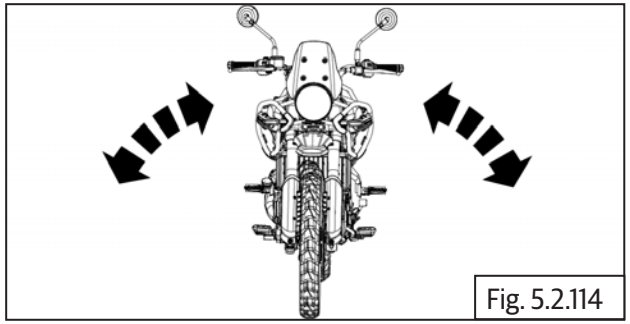
Fig. 5.2.114

- **(C)** If coolant level has dropped, top back up to filler neck level.

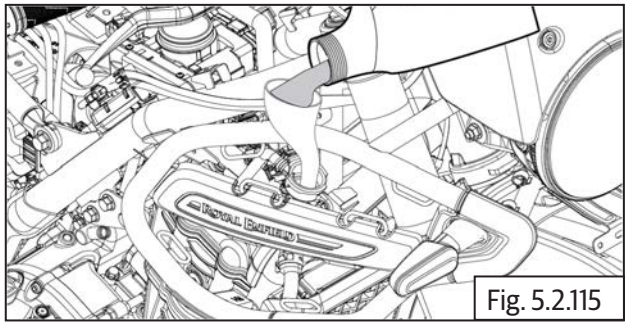
Fig. 5.2.115

Grade	TOTAL COOLELF AUTO SUPRA -37°C

- Repeat above procedure **(steps A to C)** until the level in the filler neck no longer drops

- Close the radiator pressure cap **(a)** ensuring it is correctly fitted & fully tightened clockwise.

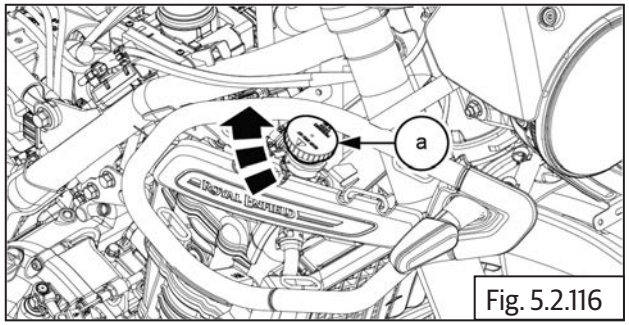

Fig. 5.2.116

- Remove the radiator expansion tank cap **(a)**.

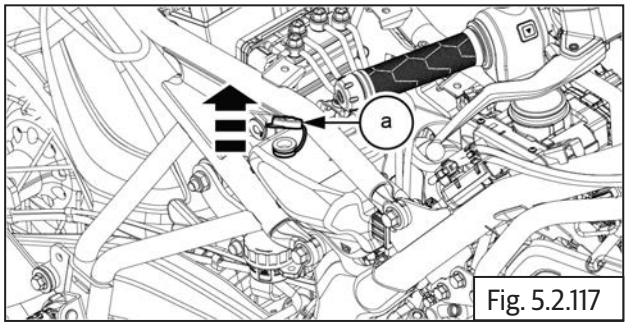

Fig. 5.2.117

- Fill the recommended coolant to the upper level line.

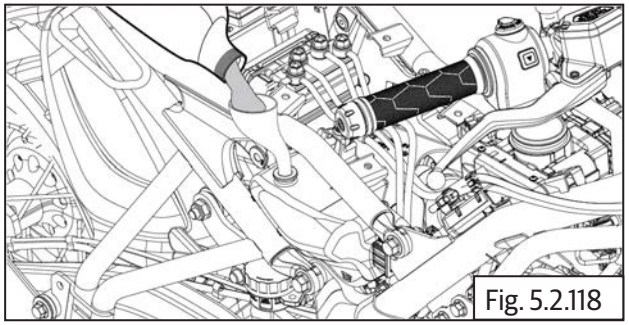
Fig. 5.2.118

Grade	TOTAL COOL ELF AUTO SUPRA -37°C

- Start the engine in neutral.
- Run the engine at idle for 5 minutes.
- Blip the throttle 3 or 4 times.

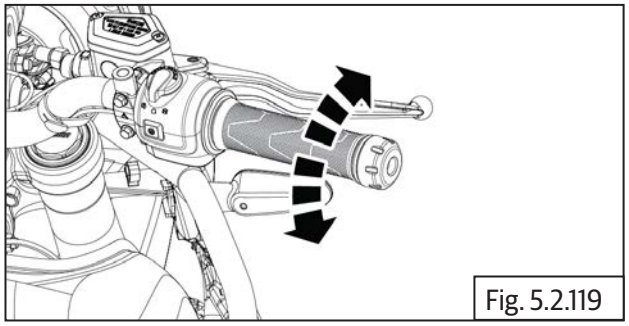

Fig. 5.2.119

- Stop the engine and allow it to cool.
- Top up the coolant at the radiator pressure cap if required.
- Check for coolant leaks.
- Install the LHS and RHS side panels.

5.2.22. Sump Guard

- Locate the sump guard bracket rear **(a)** into engine.

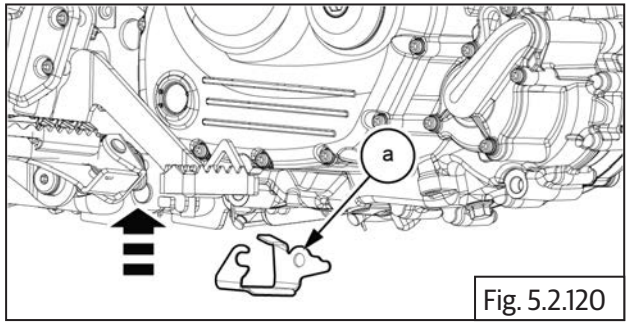

Fig. 5.2.120

- Locate and tighteen flange head bolt **(M10) (a)** with nut **(b)** into engine.

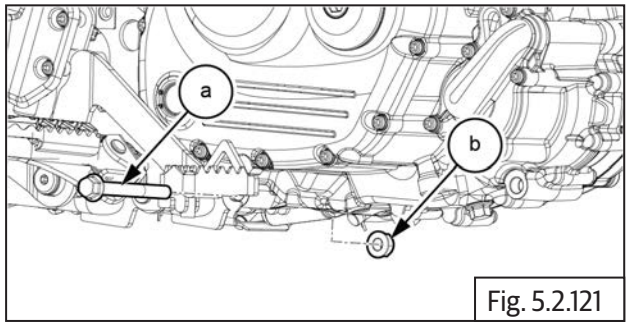

Fig. 5.2.121

	14 mm Socket with Ratchet 17 mm Double end Spanner
Torque	45 Nm / 4.5 kgf-m

- Locate the sump guard bracket front **(a)** into engine.

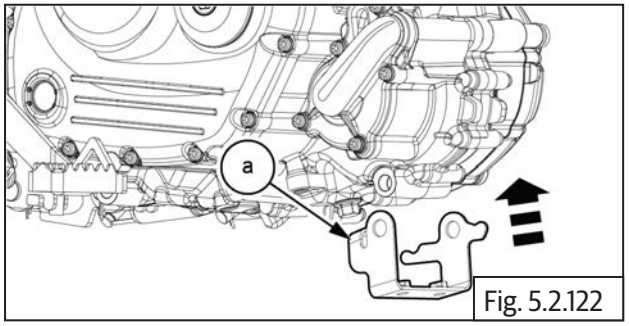

Fig. 5.2.122

- Locate and tighten flange head bolt **(M10) (a)** with nut **(b)** into engine.

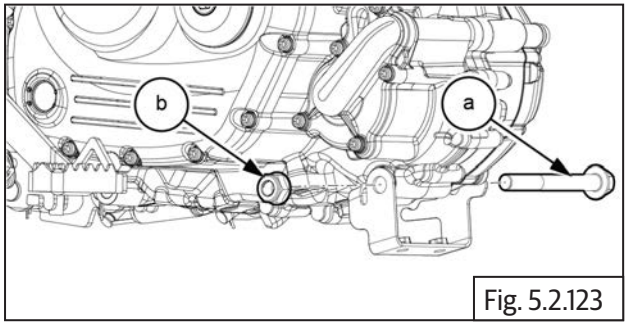

Fig. 5.2.123

	14 mm Socket with Ratchet 17 mm Double end Spanner
Torque	45 Nm / 4.5 kgf-m

- Locate the sump guard insert panel **(a)** into sump guard.

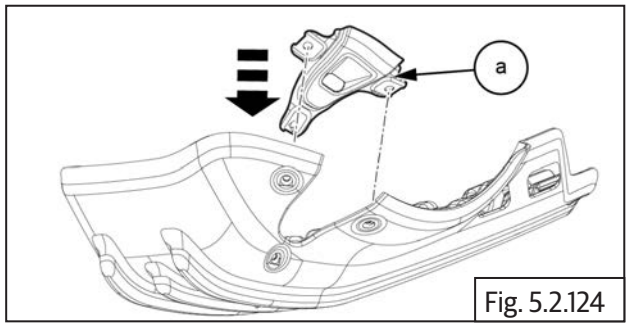

Fig. 5.2.124

- Loosen and remove button head bolts 3 nos **(M6) (a)** from sump guard.

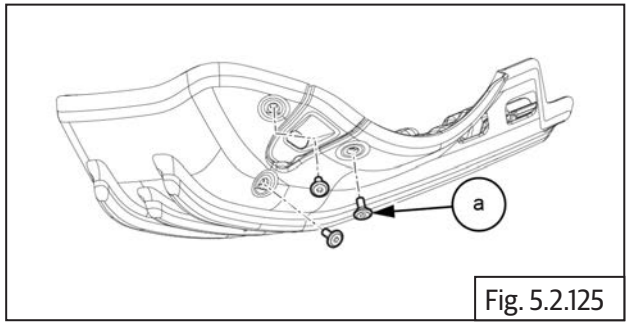

Fig. 5.2.125

	4 mm Allen Socket with Ratchet
Torque	5 Nm / 0.5 kgf-m

- Gently locate the sump guard **(a)** inside into rear bracket.

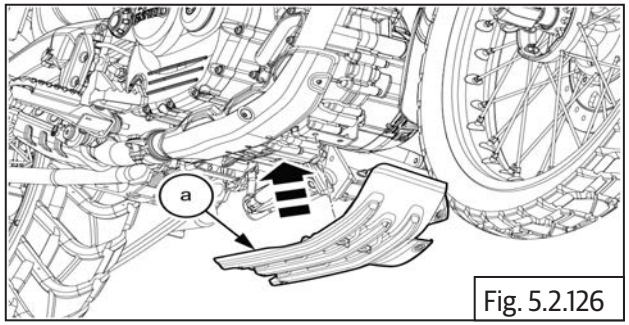

Fig. 5.2.126

- Locate and tighteen button head bolts 2 nos **(M6) (a)** into sump guard bottom.

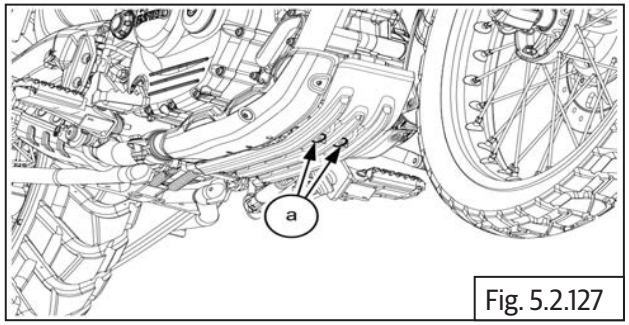

Fig. 5.2.127

	5 mm Allen Socket with Ratchet
Torque	10 Nm / 1.0 kgf-m

5.2.23. Side Panel LH

- Connect below listed couplers from LH bottom battery tray.
- **1. Crank position sensor**
- **2. Gear position sensor**

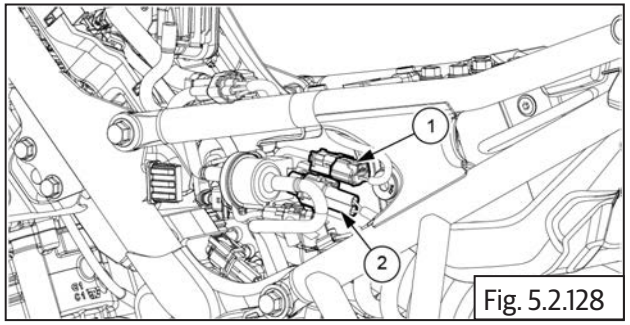

Fig. 5.2.128

- Gently locate the side panel LH **(a)** on rear subframe LH .

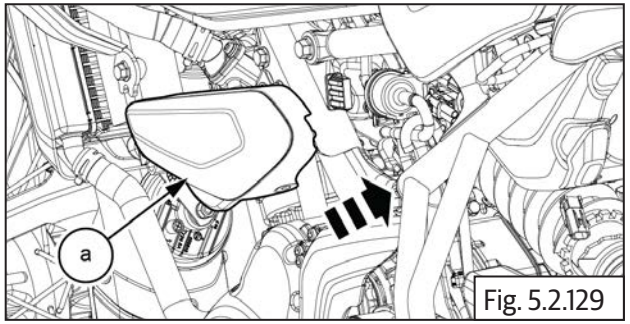

Fig. 5.2.129

- Locate and tighteen button head bolt 1 no **(M6)** **(a)** along with washer **(b)** into LH side panel.

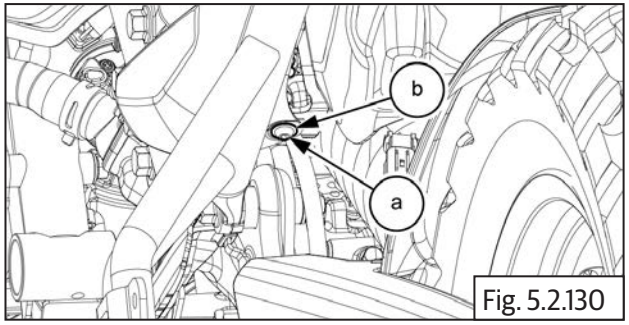

Fig. 5.2.130

	4 mm Allen Socket with Ratchet
Torque	10 Nm / 1.0 kgf-m

5.2.24. Fuel Tank

- Connect fuel hose **(a)** into injector cap.

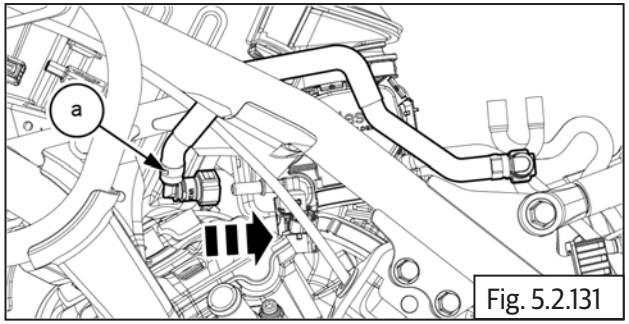

Fig. 5.2.131

- Gently locate the fuel tank **(a)** on frame.

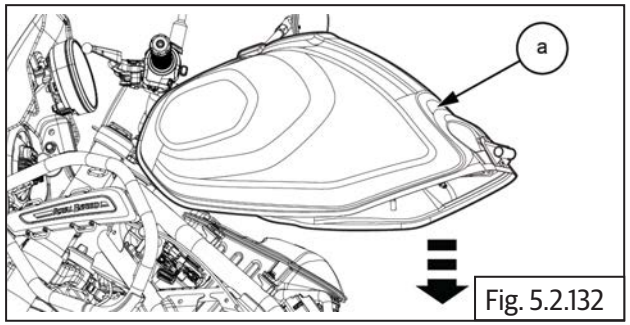

Fig. 5.2.132

- Connect fuel gauge connector **(a)** on fuel tank .

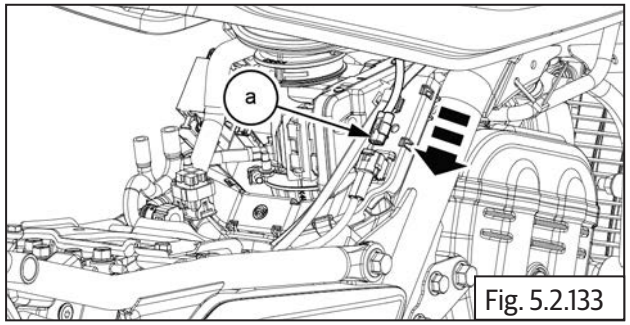

Fig. 5.2.133

- Connect fuel pump connector **(a)** on fuel tank **(b)**.

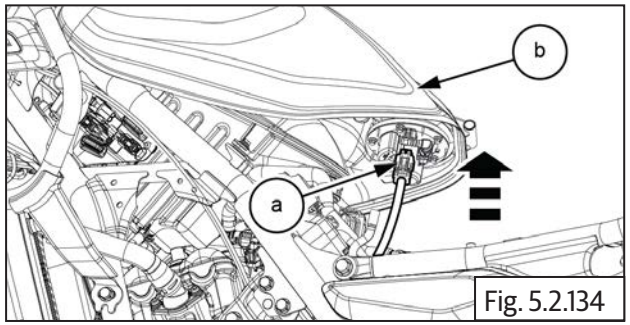

Fig. 5.2.134

- Clean quick fix adapter area and connect by pressing lock button **(a)** on fuel pump **(b)** .

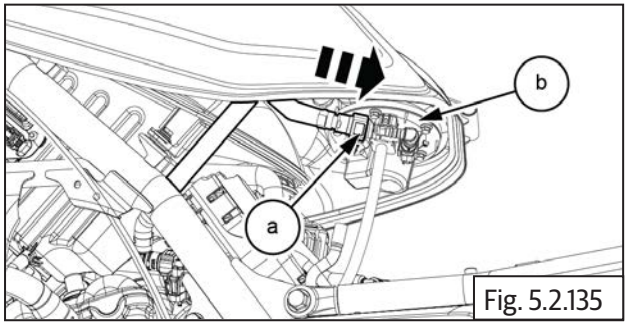

Fig. 5.2.135

- Connect EVAP connection hose **(b)** from bottom of fuel tank.
- Connect drain hose connection **(a)** from bottom of fuel tank

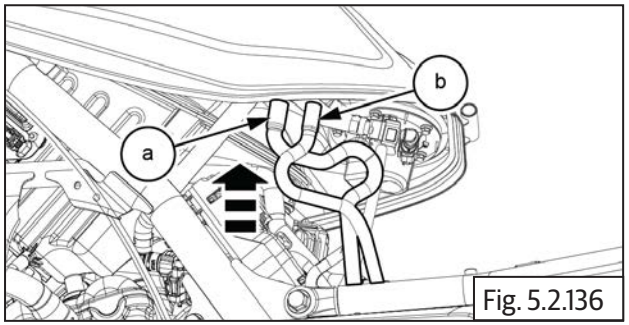

Fig. 5.2.136

- Locate and tighten 3Nos cap bolts with washers **(a)** on tank mount bracket.

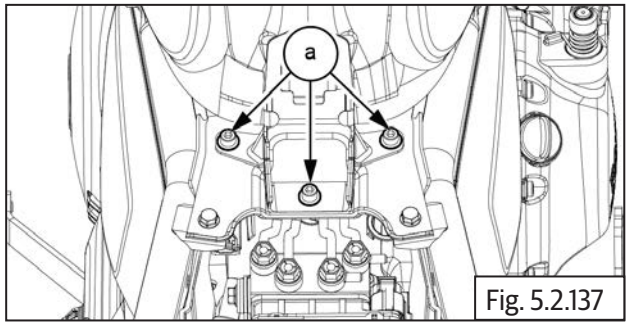

Fig. 5.2.137

	5mm Allen key with Ratchet
Torque	10 N-m / 1.0 kgf-m

5.2.25 Connect Battery Terminal

- Connect battery negative (- ve) terminal bolt **(a).**

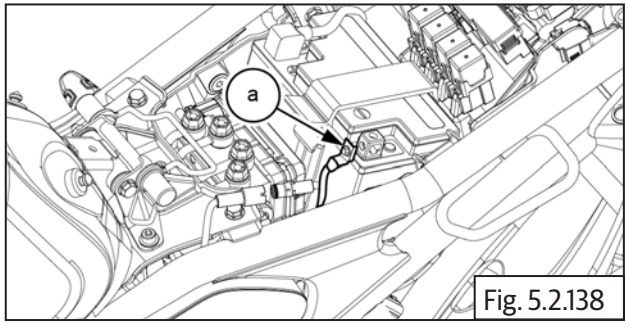

Fig. 5.2.138

	10 mm Socket with Ratchet
Torque	3-4 N-m / 0.3 - 0.4 kgf-m

- Connect battery positive (+ ve) terminal bolt **(a)**.

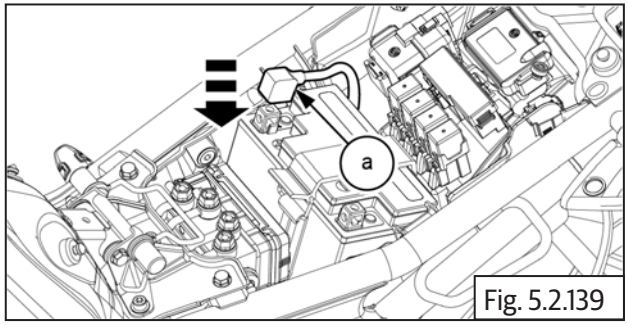

Fig. 5.2.139

	10 mm Socket with Ratchet
Torque	3-4 N-m / 0.3 - 0.4 kgf-m

- Connect the negative (- ve) coupler **(a)**.

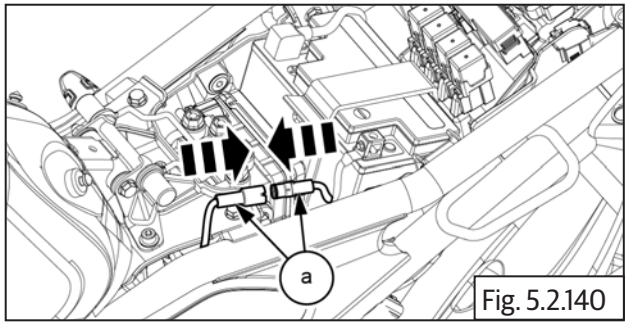

Fig. 5.2.140

- Insert ignition key into the key barrel and switch "ON" the engine.
- Make sure the cluster, front trafficators, and head lamps work properly.

5.2.26. Rider Seat

NOTE
• *The rider seat height adjustment option is available in the bottom side of the rider seat.*
• *If increase or decrease in the rider seat height just change the front and rear end seat rod slot.*

- Locate the rider seat **(a)**.

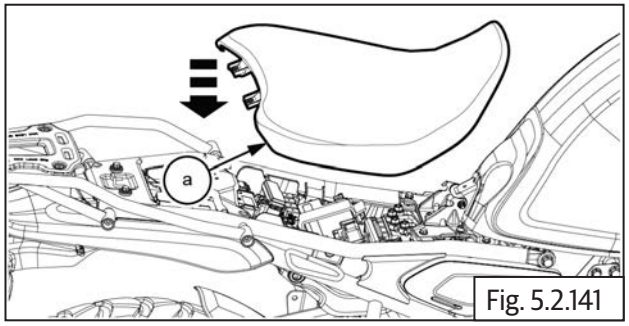

Fig. 5.2.141

- Slide the seat **(a)** towards forward direction and ensure the rider seat aligned with frame.

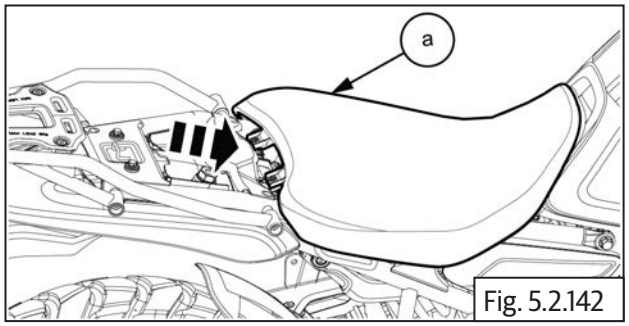

Fig. 5.2.142

5.2.27. Pillion Seat

- Locate the pillion seat **(a)**.

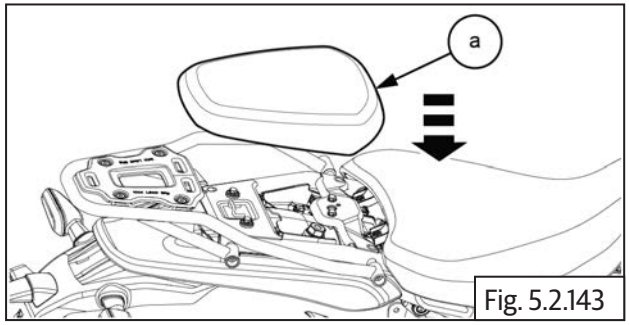

Fig. 5.2.143

- Slide the seat **(a)** towards backward direction.

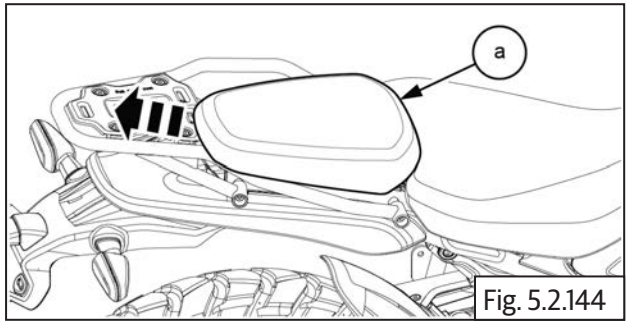

Fig. 5.2.144

- Ensure the pillion seat aligned with frame and press seat to lock with key **(a)** in position.

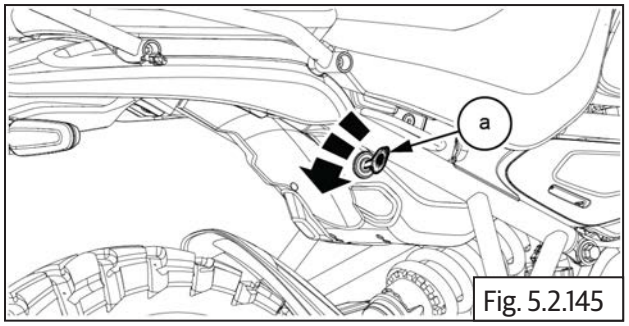

Fig. 5.2.145

- Start and warm up engine for 2 to 3 minutes and then turn it off.
- Check oil level through oil level window
- Engine oil level should be close to "MAX" condition.

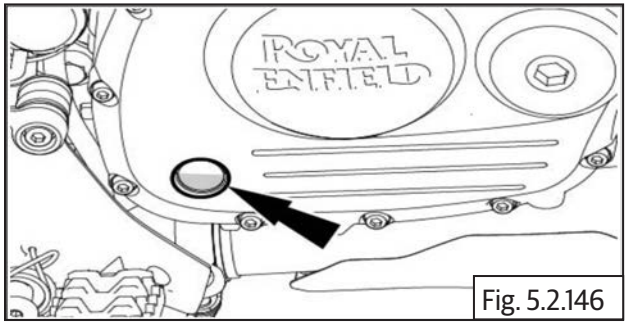

Fig. 5.2.146

NOTE
• *Switch ON and OFF the ignition twice and visually check for any fuel leakage or wet on the tank and components, If anything found, inspect and rectify the issue.*

ENGINE DISMANTLING PROCEDURE

CONTENTS PAGE

5.3. ENGINE DISMANTLING PROCEDURE

5.3.1 Components Removal from Engine 97
5.3.2 Manifold clamp Removal 97
5.3.3 Injector Removal 97
5.3.4 Spark Plug Removal 97
5.3.5 Coolant Temperature Sensor Removal 98
5.3.6 Oil Pressure Switch Removal 98
5.3.7 Thermostat Removal 98
5.3.8 Starter Motor Removal 99
5.3.9 Gear Position Sensor (GPS) Removal 99
5.3.10 FD Sprocket Removal 100
5.3.11 Oil Drain Plug And Strainer Removal 101
5.3.12 Cylinder Head Cam Cover Removal 102
5.3.13 ACG Cover (LH Side) Removal 102
5.3.14 Magneto Stator Removal 103
5.3.15 Oil Filter Removal 104
5.3.16 RH Side clutch Cover Removal 104
5.3.17 Oil Inspection Window Removal 105
5.3.18 Clutch Shifter Shaft Removal 105
5.3.19 Cam Ladder & Camshaft Sprocket Removal 107
5.3.20 Cylinder Head Removal 110
5.3.21 Cylinder Head Valve Removal 111
5.3.22 Piston Barrel Removal 112
5.3.23 Piston Removal 112
5.3.24 Piston Ring Removal 113
5.3.25 Clutch & Drive Sprocket Removal 113
5.3.26 Primary Drive Gear Removal 115
5.3.27 Oil Pump Removal 117
5.3.28 Crankcase Oil Jet Removal 118
5.3.29 Water Pump Removal 119
5.3.30 Magneto Assembly Removal 120
5.3.31 Gear shifter shaft Removal 121
5.3.32 RH Crankcase Removal 123
5.3.33 Crankshaft And Mass Balancer Removal 124
5.3.34 Gear Assembly Removal 125
5.3.35 Gear Assembly Removal 126
5.3.36 Countershaft Removal 126
5.3.37 Drive Shaft Removal 127

5.3.1 Components Removal from Engine

⚠ WARNING

The engine and exhaust system get extremely hot during normal operation and direct contact with skin can cause serious burns. Make sure engine is in normal temperature (OR) cooled before starting operation.

NOTE

- *Ensure the engine is properly clamped on the holding fixture on a worktable.*
- *Ensure the engine is clean and free of any oil residue/dirt. Clean engine with recommended degreasing agents/solvents to remove oil residue/dirt.*
- *Ensure worktable is clean and atmosphere is dust free.*

5.3.2 Manifold clamp Removal:

- Loosen worm clip screws **(M5) (a)** to a disconnect the adaptor from the cylinder head.

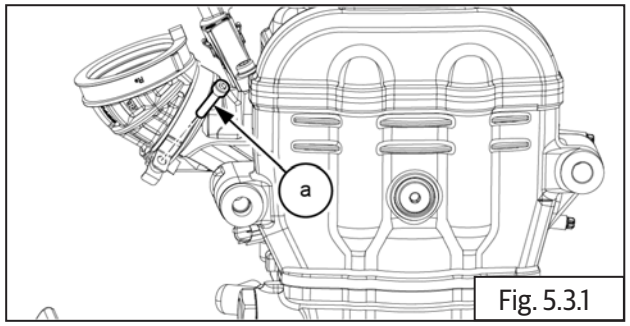

Fig. 5.3.1

	4 mm allen key with Ratchet

- Gently pull out the adaptor **(a)** from inlet manifold.

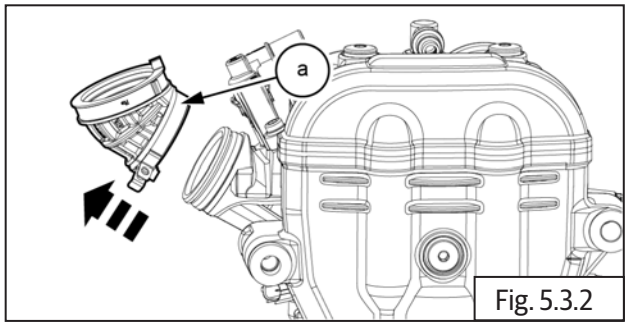

Fig. 5.3.2

5.3.3 Injector Removal:

- Remove **1 No (M6)** injector mounting bolt **(a)**.

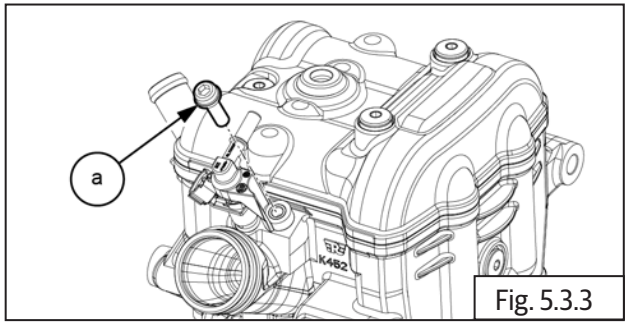

Fig. 5.3.3

	5 mm allen key with Ratchet

- Gently pull out the injector assembly **(a)**.

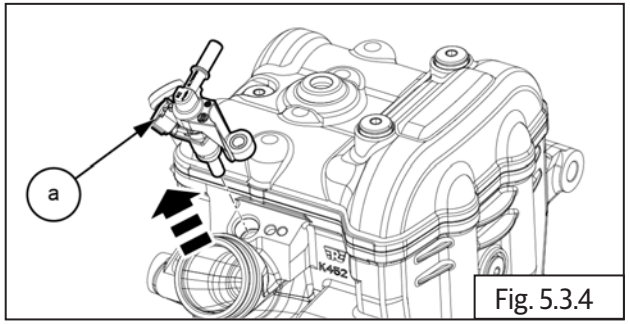

Fig. 5.3.4

⚠ CAUTION

- **Store the injector in a clean and dry place. Make sure that the injector is not damaged.**
- **Place the injector in a plastic bag to avoid dust entry.**

5.3.4 Spark Plug Removal:

⚠ CAUTION

Before removing the spark plug, blow away any dirt accumulated in the spark plug area with compressed air to prevent it from dust falling into cylinder head.

- Loosen and remove spark plug **(a)** from cylinder head.

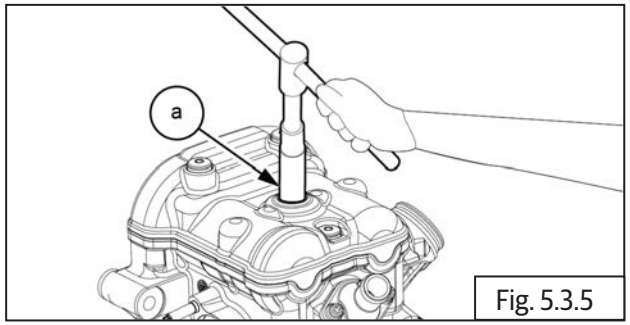

Fig. 5.3.5

	14 mm Long Socket with Ratchet

5.3.5 Coolant Temperature Sensor Removal:

- Loosen and remove the coolant Temperature sensor **(a)** along with O-ring.

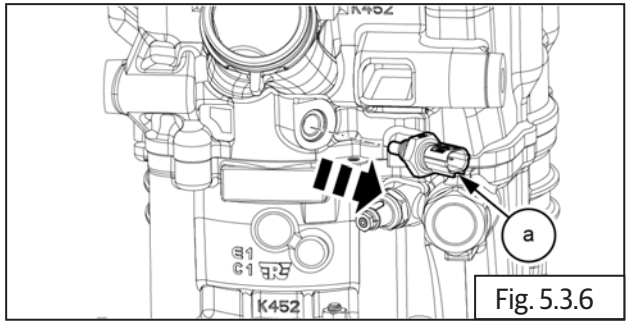

Fig. 5.3.6

	18 mm Long Socket with Ratchet

- Remove the O-ring **(a)** from coolant Temperature sensor **(a)**.

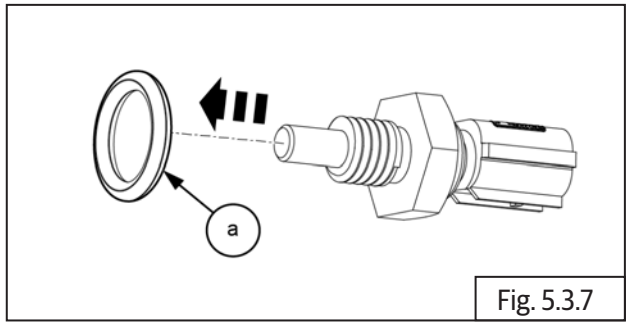

Fig. 5.3.7

5.3.6 Oil Pressure Switch Removal:

- Loosen and remove the Oil pressure switch **(a)** along with washer **(b)**.

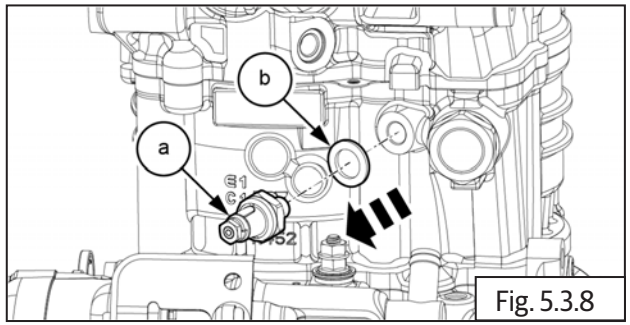

Fig. 5.3.8

	21 mm Long Socket with Ratchet

5.3.7 Thermostat Removal:

- Loosen and remove 2 Nos. (M6) Thermostat mounting bolts **(a)**.

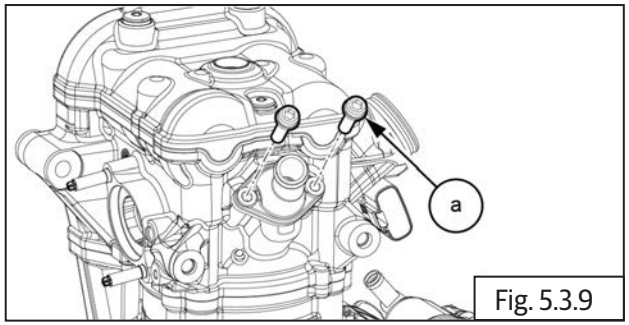

Fig. 5.3.9

	5 mm allen key with Ratchet

- Remove the Thermostat **(a)** from the engine.

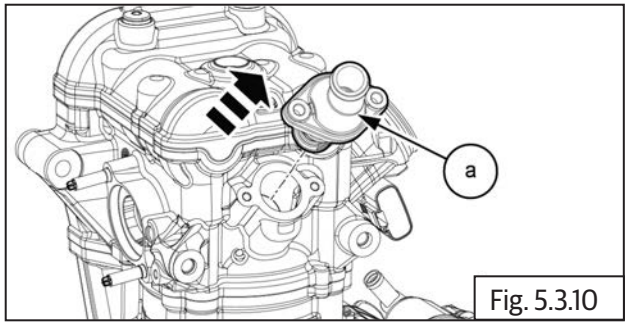

Fig. 5.3.10

- Separate the thermostat **(a)** from housing.

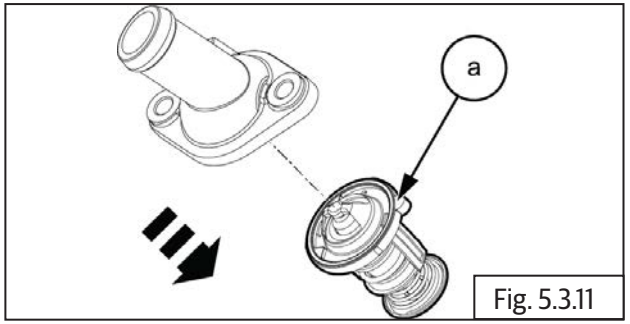

Fig. 5.3.11

5.3.8 Starter Motor Removal:

- Loosen and remove 2 Nos. (M6) Starter Motor mounting bolts **(a)**.

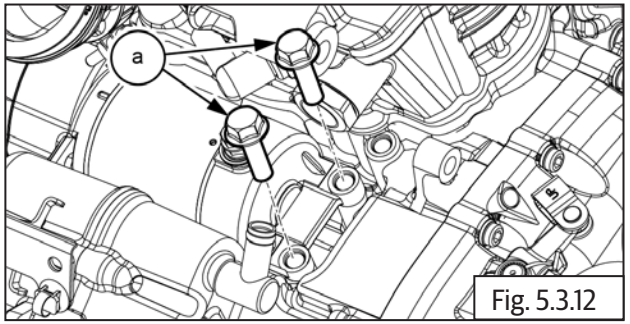

Fig. 5.3.12

	10 mm Socket with Ratchet

⚠ CAUTION

Remove the Bolts equally to avoid thread damage

NOTE

- **DO NOT** *tap on the starter motor while removing it. Tapping may damage the internal components.*

- Gently Pull out the Starter motor **(a)** with O - ring **(b)** from the Crankcase.

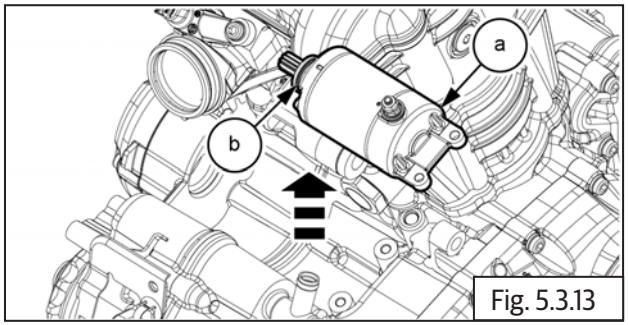

Fig. 5.3.13

5.3.9 Gear Position Sensor (GPS) Removal:

- Loosen and remove 2 Nos. cap bolts **(M6) (a)** from gear position sensor cable guide bracket.

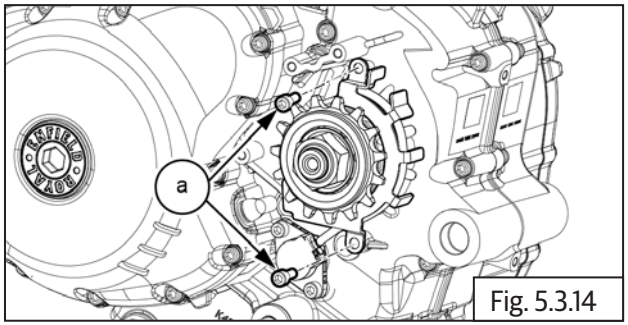

Fig. 5.3.14

	5 mm allen key with Ratchet

- Remove the cable guide bracket **(a)** .

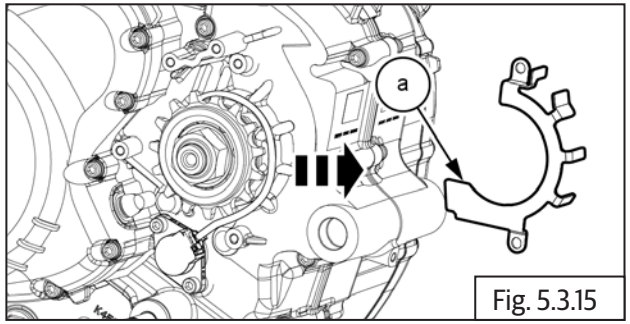

Fig. 5.3.15

- Loosen and remove 2 Nos. Gear position sensor mounting bolts **(M6) (a)**.

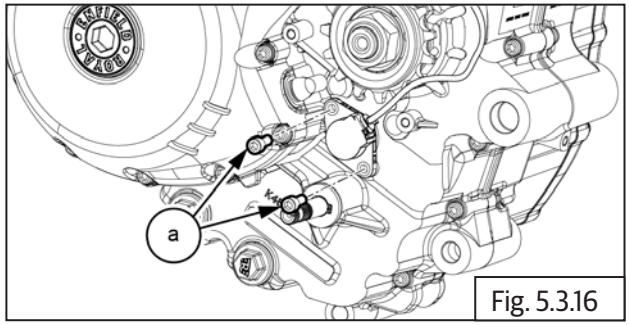

Fig. 5.3.16

	5 mm allen key with Ratchet

- Remove Gear position sensor with "O" ring **(a)** from engine.

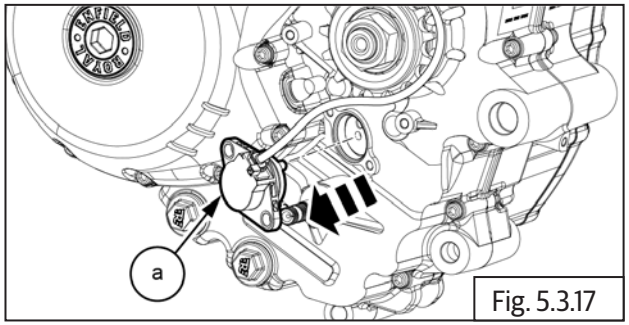

Fig. 5.3.17

- Loosen and remove 1 Nos. cap head bolt **(M6) (a)** from clip bracket .

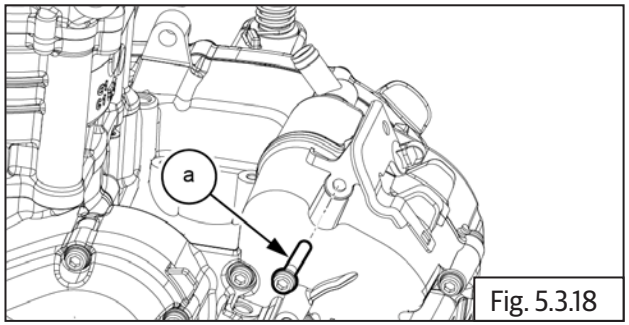

Fig. 5.3.18

	5 mm allen key with Ratchet

- Remove clip bracket **(a)** from engine.

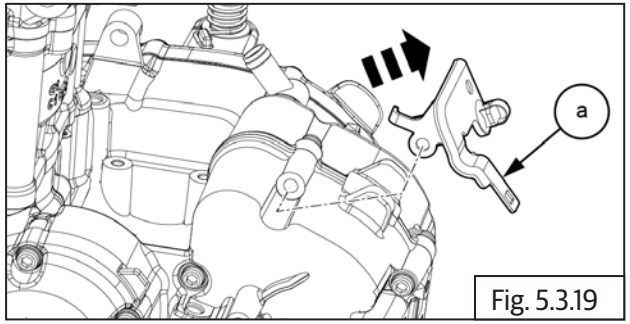

Fig. 5.3.19

5.3.10 FD Sprocket Removal:

- Straighten lock tab washer **(a)** located over FD sprocket.

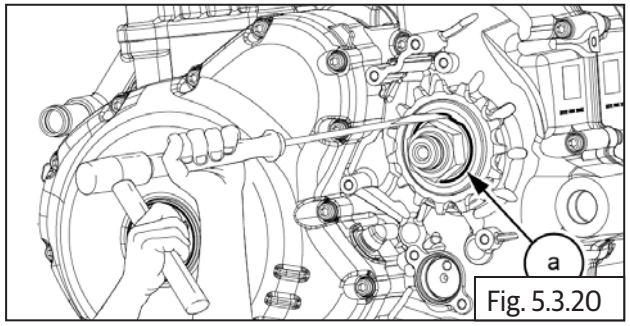

Fig. 5.3.20

	Chisel and Hammer

- Locate special tool over FD sprocket **(a)** and loosen hex nut **(M20) (b)**.

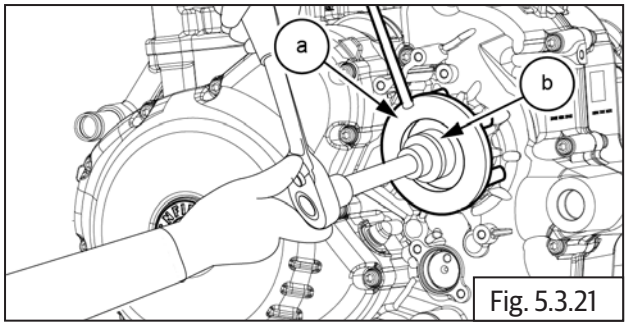

Fig. 5.3.21

SPL	Part No: ST32069/A
	Part Name: FD Sprocket holder

	32 mm Socket with Ratchet

- Remove the lock top washer **(M20) (a)** from drive shaft.

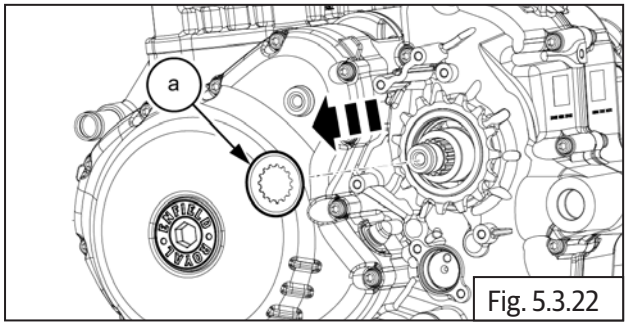

Fig. 5.3.22

- Remove the FD Sprocket **(a)** from drive shaft.

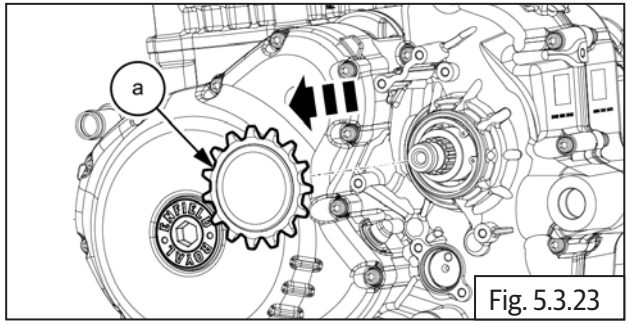

Fig. 5.3.23

- Gently Remove the Spacer **(a)** from drive shaft.

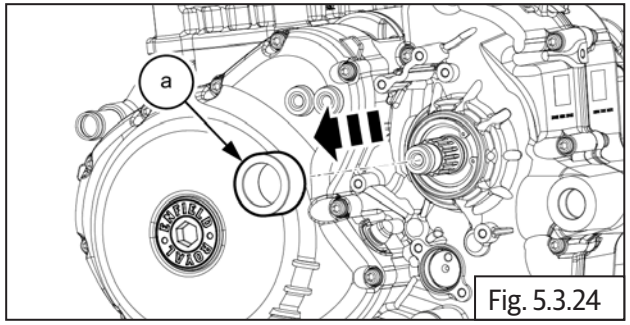

Fig. 5.3.24

- Remove circlip **(a)** from drive shaft.

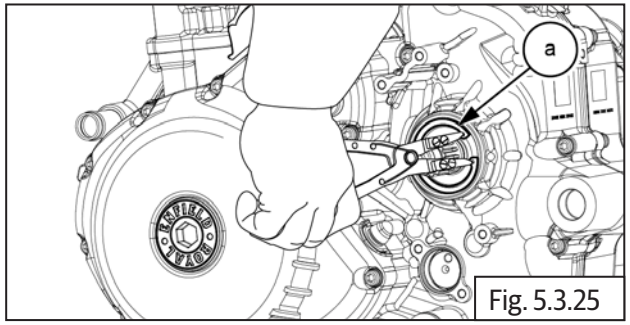

Fig. 5.3.25

	External Circlip Plier

- Remove the Oil seal **(a)** from drive shaft.

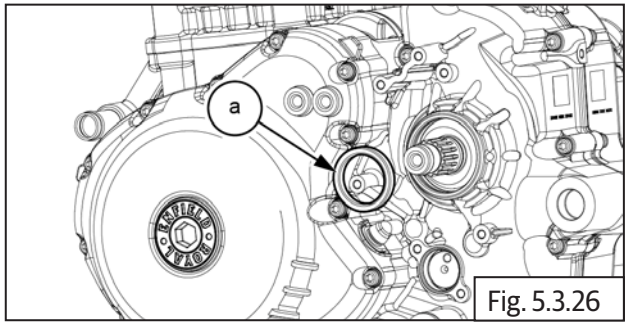

Fig. 5.3.26

	Connector

- Remove O-ring **(a)** from drive shaft.

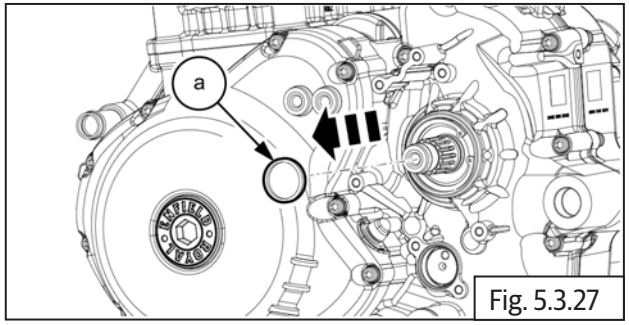

Fig. 5.3.27

	Connector

5.3.11 Oil Drain Plug And Strainer Removal:

- Loosen and remove 2 Nos drain plugs **(a)** along with "O" Rings **(b)** from LHS oil sump.

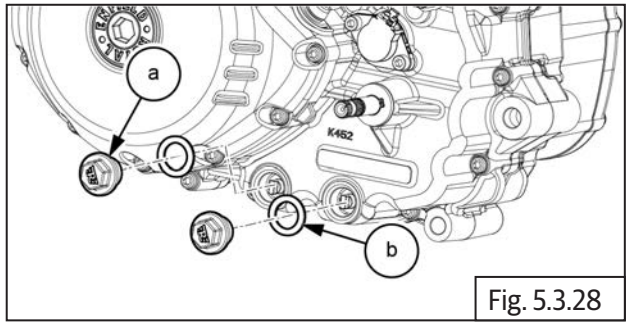

Fig. 5.3.28

	17 mm Socket with Ratchet

- Remove the 2 Nos strainers **(a)** with "O" Rings **(b)** from LHS oil sump

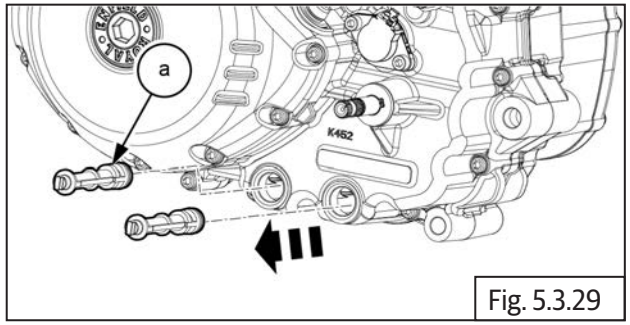

Fig. 5.3.29

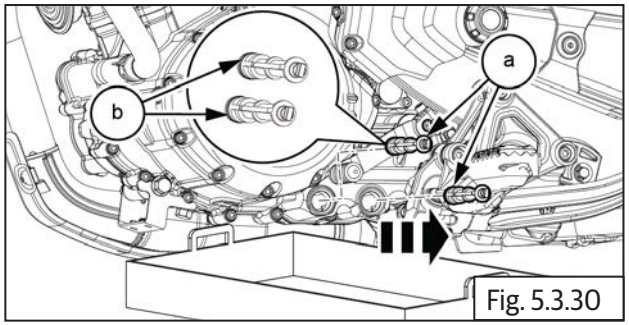

Fig. 5.3.30

	Nose Plier

5.3.12 Cylinder Head Cam Cover Removal:

- Loosen and remove the 3 Nos. Hex Socket head screws**(M6) (a)** along with washer **(b)** .

⚠ CAUTION
Remove the bolts equally to avoid thread damage.

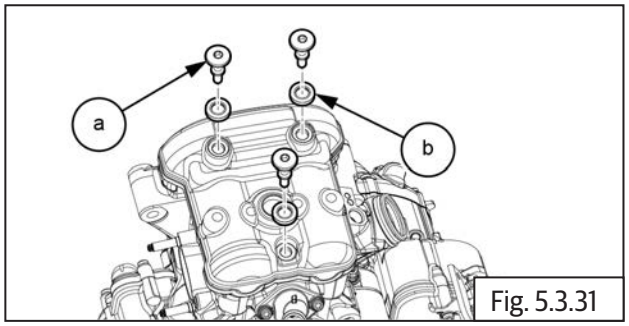

Fig. 5.3.31

	5 mm allen key with Ratchet

- Gently remove the cam cover **(a)** from cylinder head.

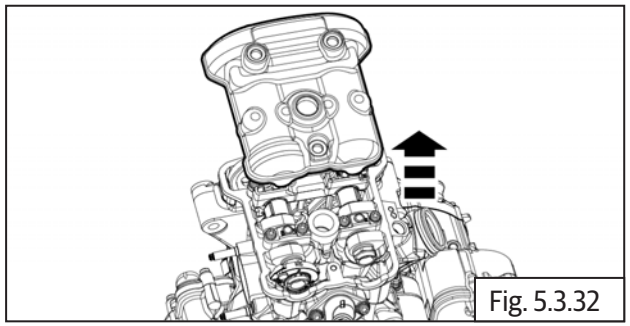
Fig. 5.3.32

- Gently remove the gasket **(a)** without damage from cam cover **(b)** .

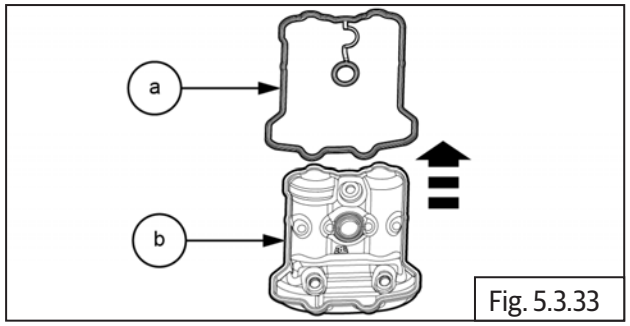

Fig. 5.3.33

5.3.13 ACG Cover (LH Side) Removal:

- Remove crankshaft hole plug **(M34) (a)** along with 'O' Ring **(b)** from center of magneto cover.

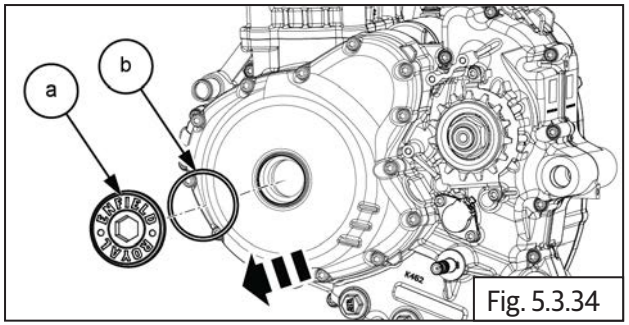

Fig. 5.3.34

	14 mm allen key with Ratchet

- Loosen and remove 13 Nos. cap flange bolts **(M6) (a)** in crisscross pattern from LH side cover.

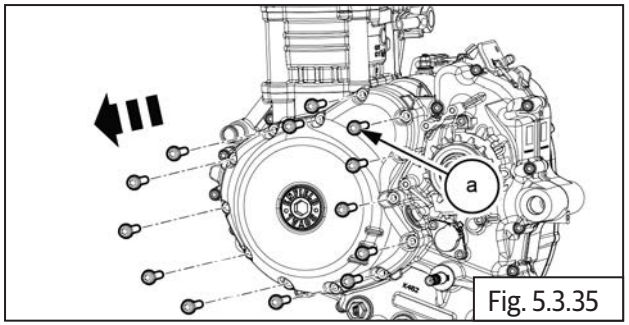

Fig. 5.3.35

	5 mm allen key with Ratchet

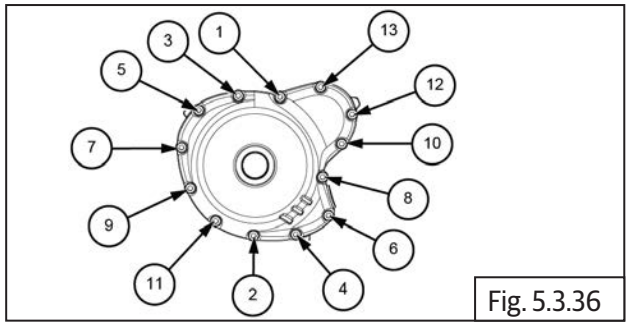

Fig. 5.3.36

- Gently tap on the tabs with a plastic / rubber mallet, on the inside edges of the magneto cover **(a)**, to remove.
- Remove magneto cover **(a)** from crankcase on LH side.

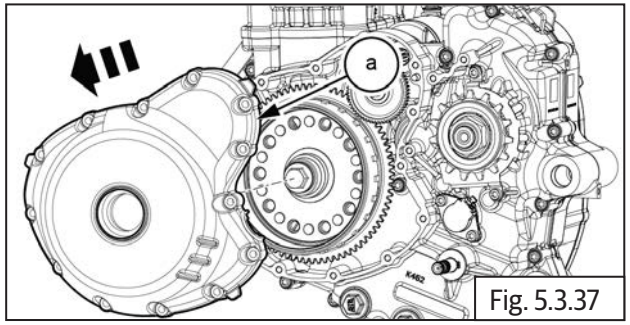

Fig. 5.3.37

	Plastic/Rubber mallet

- The magneto cover may be hard to remove from crankcase, due to the magnetic force from the magneto acting on the stator coil.
- Remove the dowel pins 2 Nos. **(a)** from LH side Crankcase.

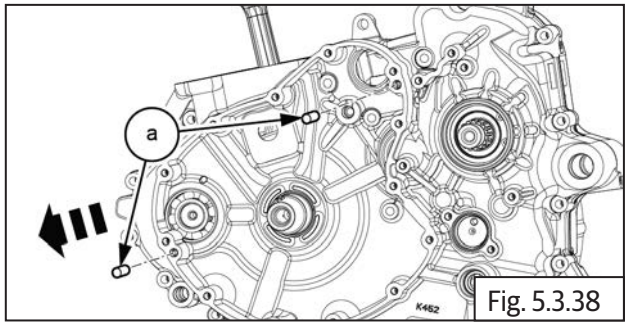

Fig. 5.3.38

- Gently Remove the ACG cover gasket **(a)** .

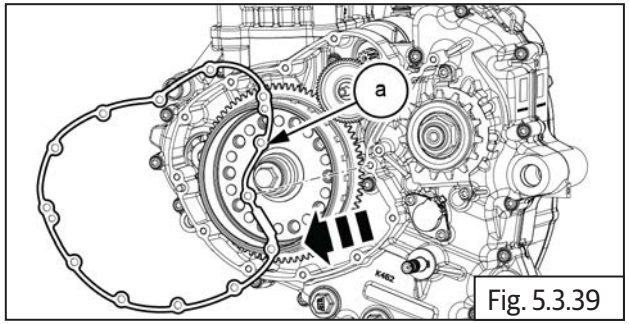

Fig. 5.3.39

⚠ CAUTION

- *Do not use a sharp tool to scrap the gasket material from the joint faces.*
- *If required scrap only with a soft and blunt tool.*

5.3.14 Magneto Stator Removal:

- Loosen and remove 2 Nos. cap flange bolts **(M5)** **(a)** from Crank position sensor.

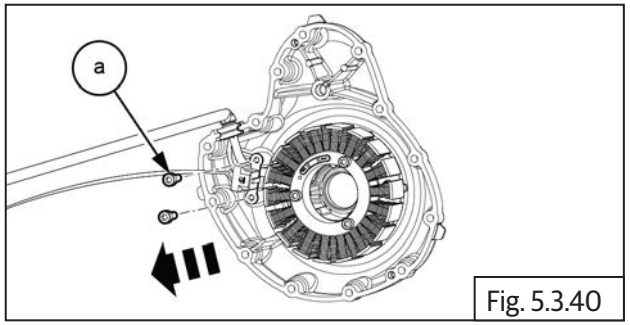

Fig. 5.3.40

	4 mm allen key with Ratchet

- Gently release wiring grommet **(a)** from ACG cover.

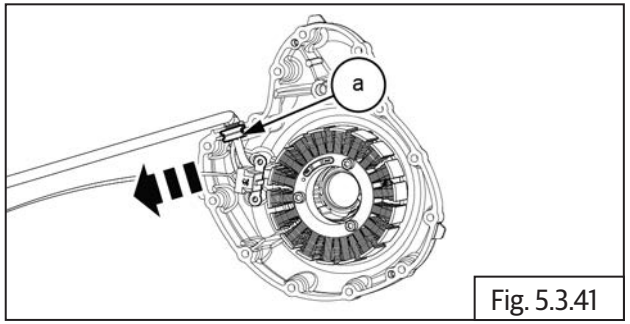

Fig. 5.3.41

- Loosen and remove 3 Nos. cap flange bolts **(M6)** **(a)** from magneto starter mounting.

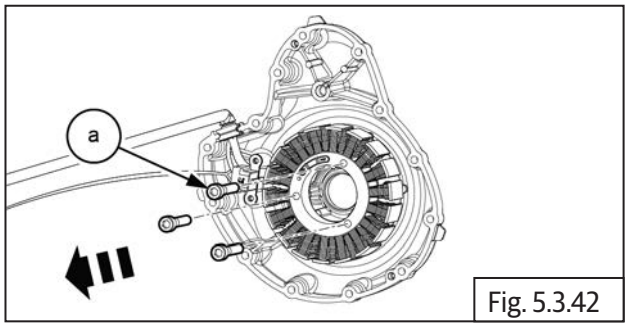

Fig. 5.3.42

	5 mm allen key with Ratchet

- Gently remove the magneto starter **(a)** from LH ACG cover.

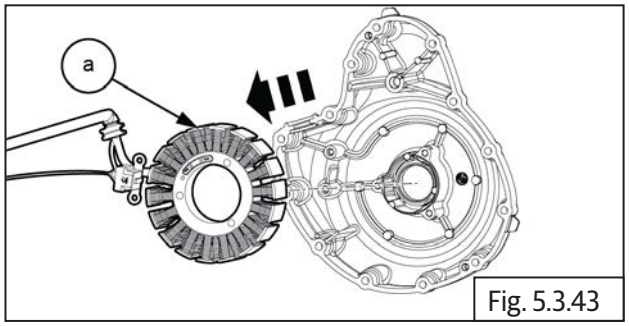

Fig. 5.3.43

5.3.15 Oil Filter Removal:

- Loosen and remove the oil filter cap **(a)** along with O-ring **(b)**.

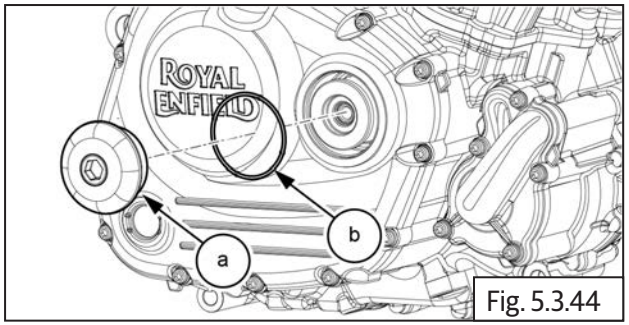

Fig. 5.3.44

	14 mm allen key with Ratchet

- Remove the spring **(a)** from oil filter cap.

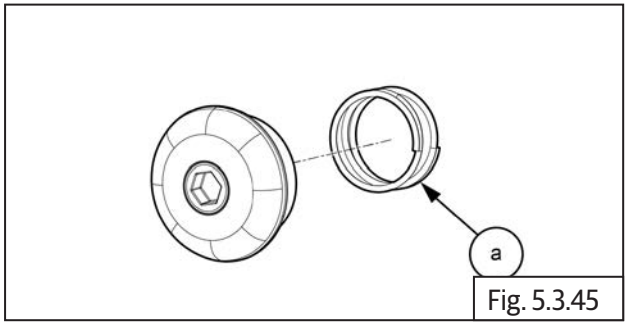

Fig. 5.3.45

- Remove the oil filter **(a)** from RH clutch cover.

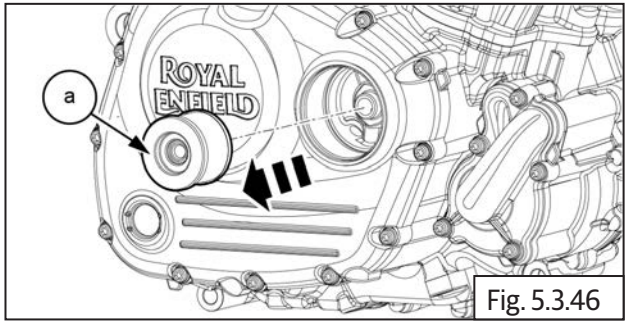

Fig. 5.3.46

5.3.16 RH Side clutch Cover Removal:

- Loosen and remove 13 Nos. cap flange bolts **(M6)** **(a)** in crisscross pattern from RH side cover **(b)**.

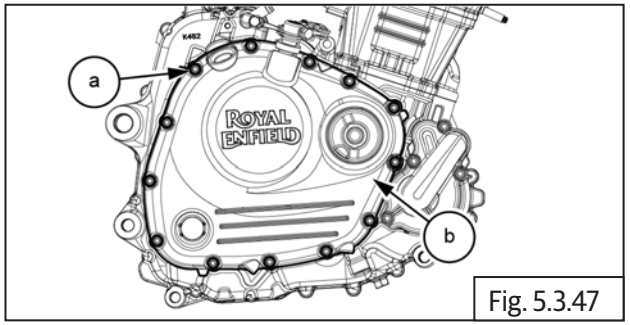

Fig. 5.3.47

	5 mm allen key with Ratchet

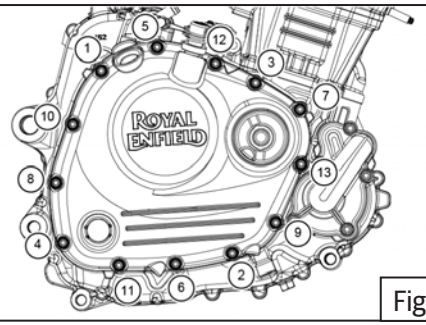

Fig. 5.3.48

- Gently remove the RH side cover **(a)**.
- Gently tap on the tabs with a plastic / rubber mallet, on the inside edges of the clutch cover **(a)**, to remove.

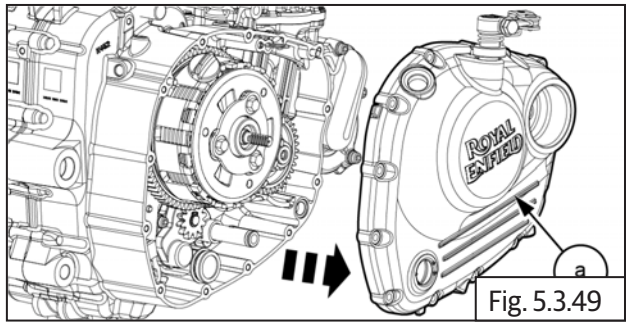

Fig. 5.3.49

	Plastic/Rubber mallet

- Remove the oli transfer pipe with O rings **(a)**.

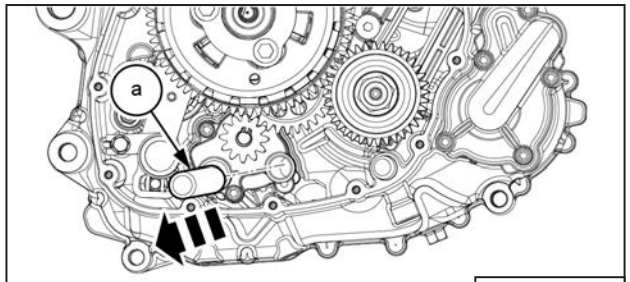

Fig. 5.3.50

- Remove the clutch cover gasket **(a)** from RH side cover.

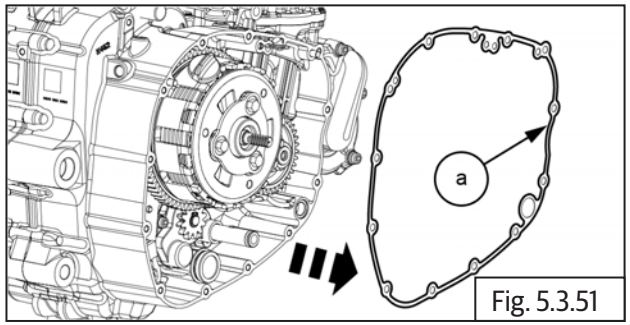

Fig. 5.3.51

⚠ CAUTION

- *Do not use a sharp tool to scrap the gasket material from the joint faces.*
- *If required scrap only with a soft and blunt tool.*

5.3.17 Oil Inspection Window Removal:

- Remove the circlip **(a)** on the oil level window inside clutch cover

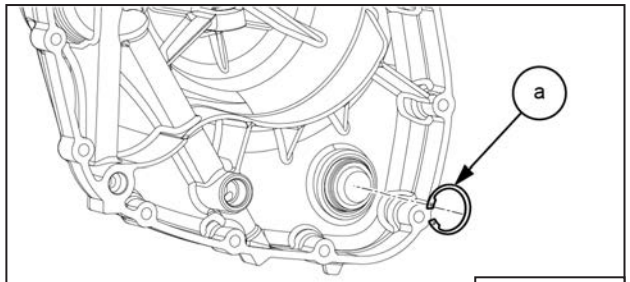

Fig. 5.3.52

	Circlip plier

- Gently remove oil inspection window **(a)** from RH side clutch cover.

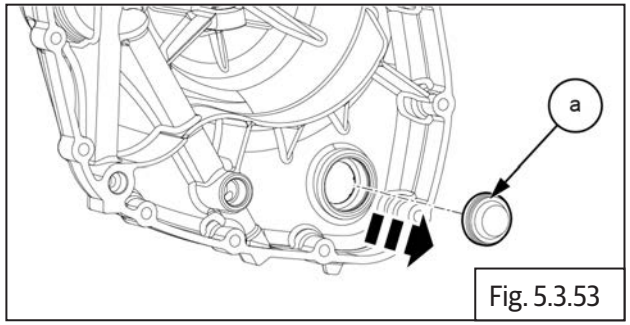

Fig. 5.3.53

	Screwdriver

5.3.18 Clutch Shifter Shaft Removal:

- Gently remove the E clip **(a)** and washer **(b)** from the bottom of the clutch actuating shaft inside clutch cover.

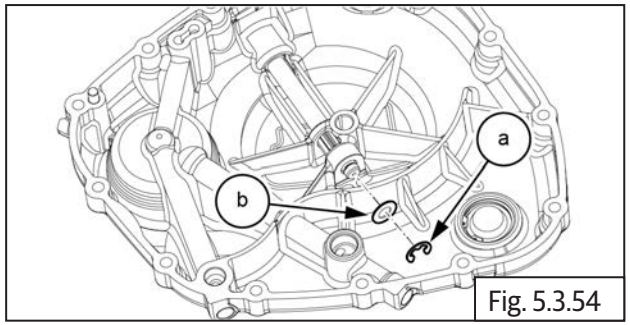

Fig. 5.3.54

	Screwdriver

- Gently pull out clutch actuating shaft **(a)** from clutch cover **(b)**.

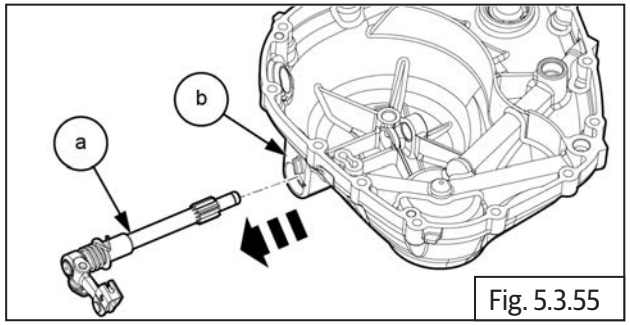

Fig. 5.3.55

- Remove the washer **(a)** and spring **(b)** from clutch actuating shaft **(c)**.

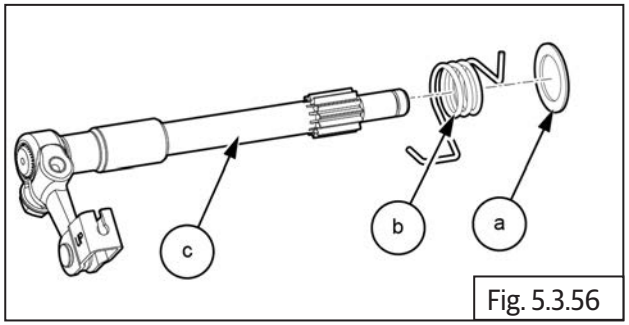

Fig. 5.3.56

- Remove the bottom needle roller bearing **(a)** from clutch cover with special tool.

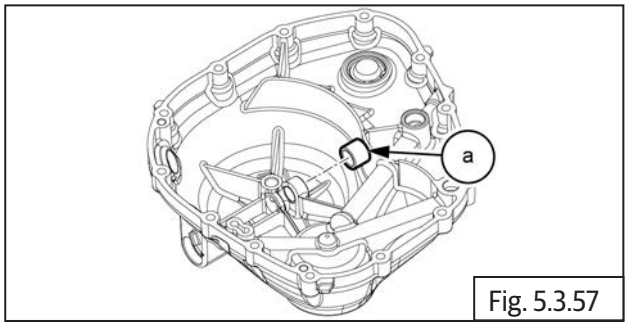

Fig. 5.3.57

SPL	Part No: ST30263/a
	Part Name: Clutch Actuating Shaft Bottom Bearing Puller

- Remove the Top needle roller bearing **(b)** and oil seal **(a)** from clutch cover with special tool.

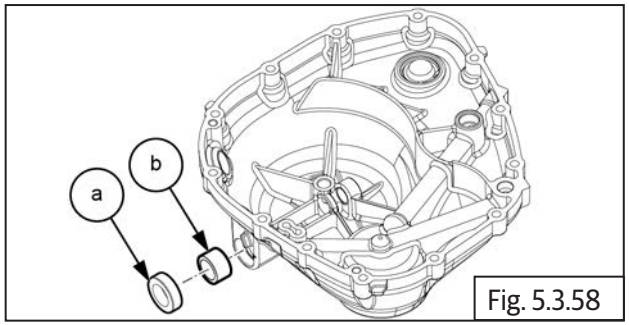

Fig. 5.3.58

SPL	Part No: ST30265/a
	Part Name: Clutch Actuating Shaft Top Bearing Puller

- Before removal draw the identify mark on the clutch release arm slot.

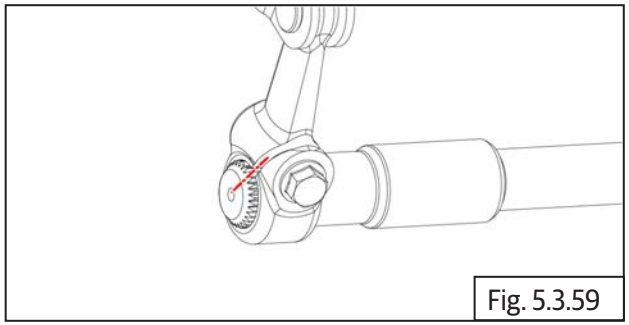
Fig. 5.3.59

- Remove the hex head bolt **(M6) (a)** from clutch release arm.

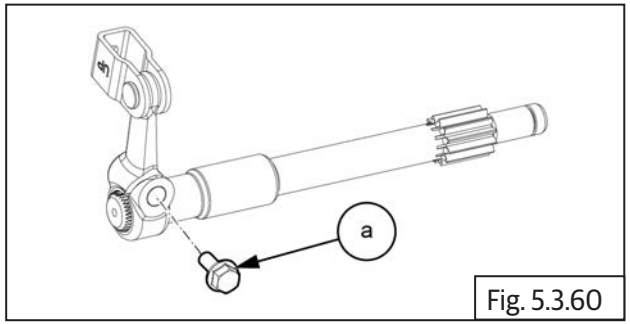

Fig. 5.3.60

	10 mm Socket with Ratchet

- Remove the clutch release arm **(a)** from the shaft.

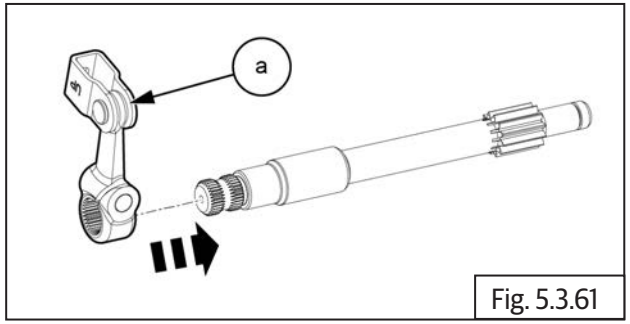

Fig. 5.3.61

5.3.19 Cam Ladder & Camshaft Sprocket Removal :

- Loosen and remove 2 Nos. Hex head bolts **(M6) (a)** from top mounting guide.

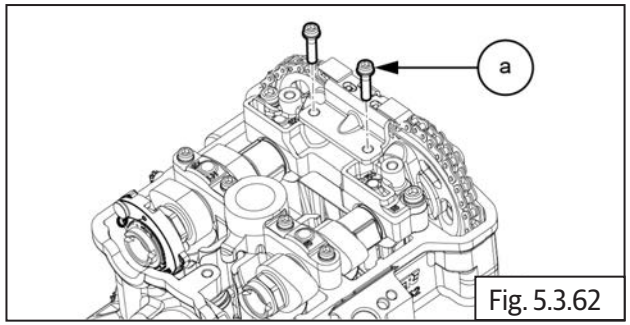

Fig. 5.3.62

	5 mm allen key with Ratchet

- Remove the top guide plate **(a)** from cam ladder.

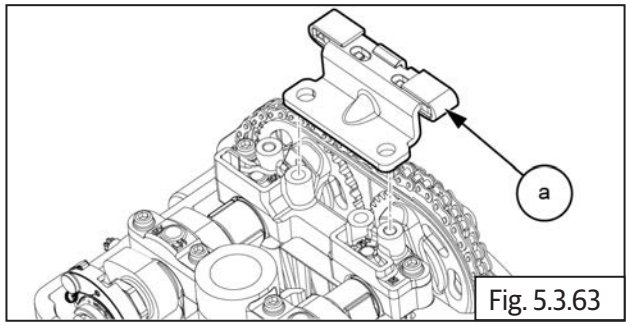

Fig. 5.3.63

- Rotate the crankshaft to bring the piston in TDC.
- Bottom edge of slot in end of camshaft should be approximately lined up with top surface of cylinder head.

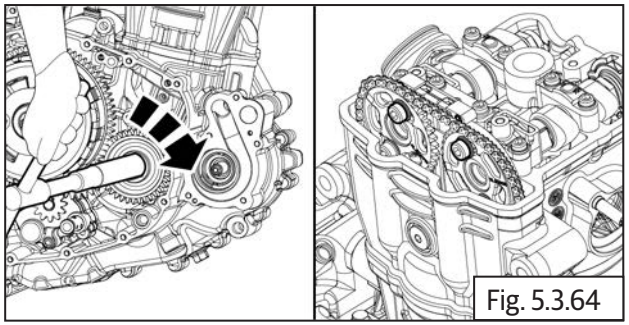
Fig. 5.3.64

	24 mm Socket with Ratchet

- Loosen and remove 2 Nos. 1st cap head bolt **(M8) (a)** from cam sprocket.

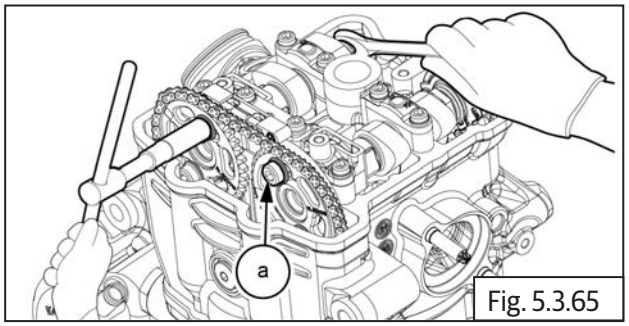

Fig. 5.3.65

	22 mm Double End Spanner 6 mm allen key with Ratchet

- Rotate the crankshaft 360° so that the 2nd cam sprocket bolt is visible above the top surface of the cylinder head.

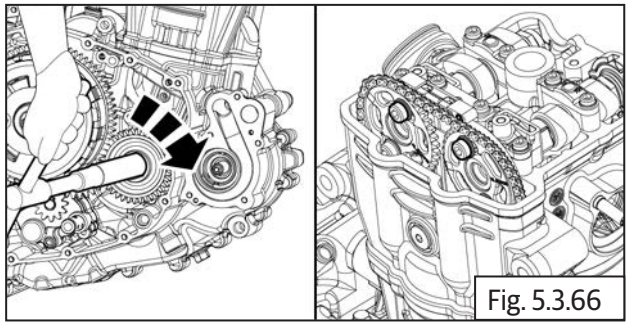

Fig. 5.3.66

	24 mm Socket with Ratchet

- Loosen and remove 2 Nos. 2nd cap head bolt **(M8) (a)** from cam sprocket.

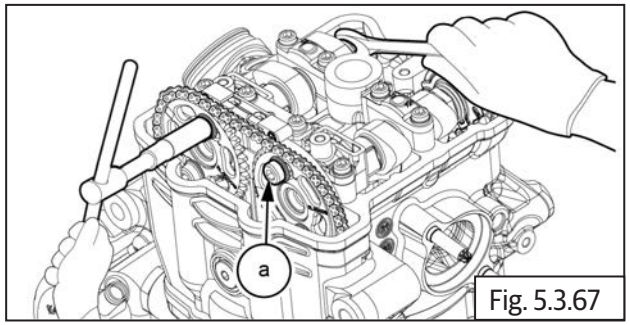

Fig. 5.3.67

	22 mm Double End Spanner 6 mm allen key with Ratchet

- **HMT -** called as Hydro Mechanical Tensioner.
- Remove the HMT **(a)** with sealing washer **(b)** from engine RHS.

NOTE
• Take care may fall off cam sprockets.

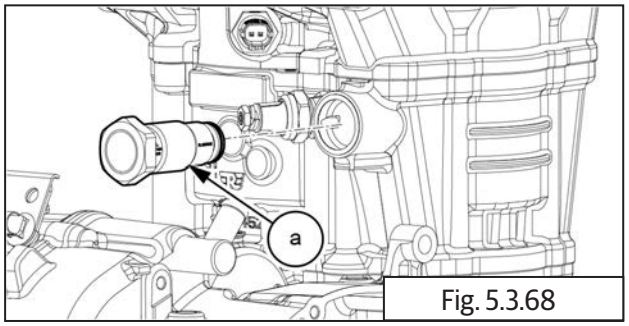

Fig. 5.3.68

	27 mm Socket with Ratchet

- Lift cam chain and remove cam sprockets from camshaft.

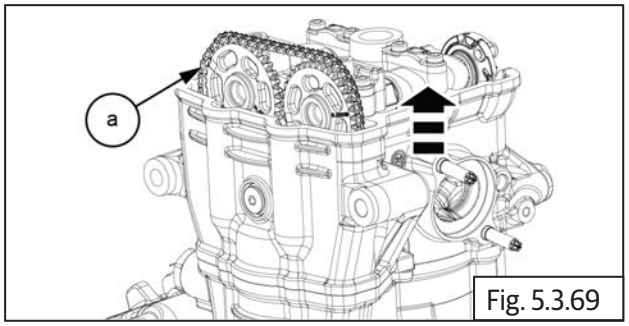

Fig. 5.3.69

- Gently release the cam chain and remove the inlet cam sprocket **(a)** and exhaust cam sprocket **(b)** from cam shafts.

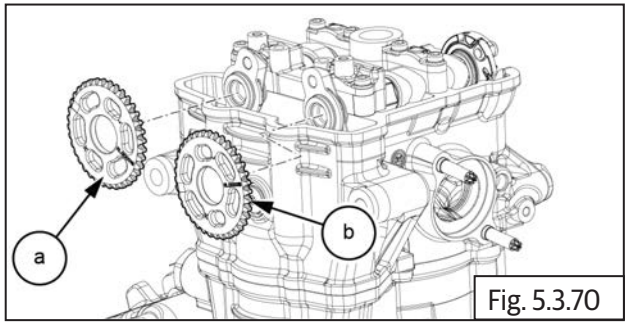

Fig. 5.3.70

- Loosen and remove the inlet and exhaust cam ladder cap bolts **(M6) (a) 6 Nos** from cylinder head.

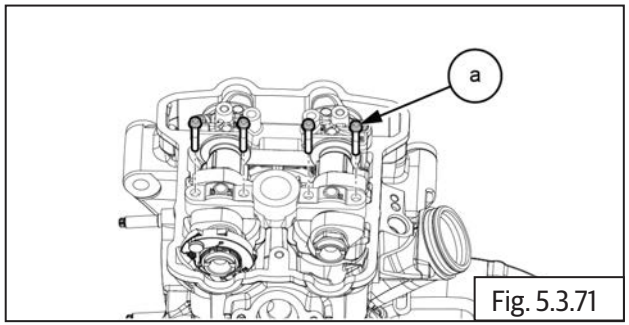

Fig. 5.3.71

	5 mm allen key with Ratchet

⚠ CAUTION

Remove the bolts equally to avoid thread damage.

- Loosen and remove 2 Nos. Hex head bolts **(M6)** **(a)** from cam ladder.

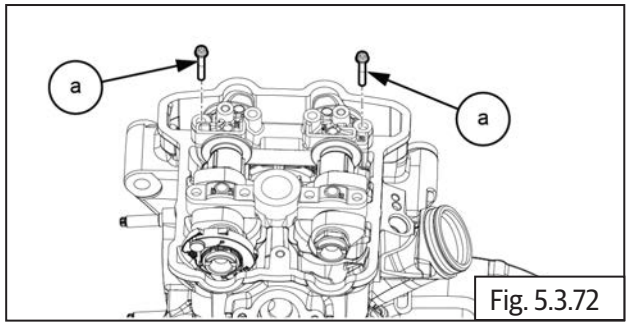

Fig. 5.3.72

	5 mm allen key with Ratchet

⚠ CAUTION

Remove the bolts equally to avoid thread damage.

- Remove cam ladders **(a)** from cylinder head assembly.

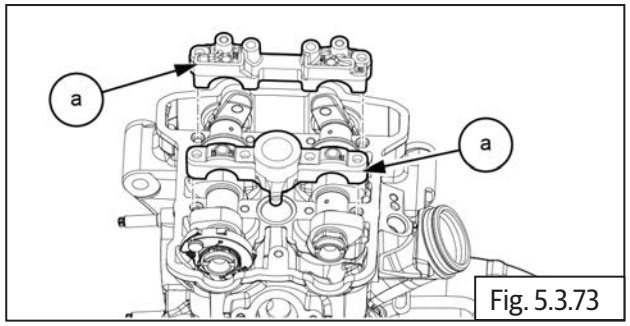

Fig. 5.3.73

- Remove the O-ring **(a)** from cylinder head assembly.

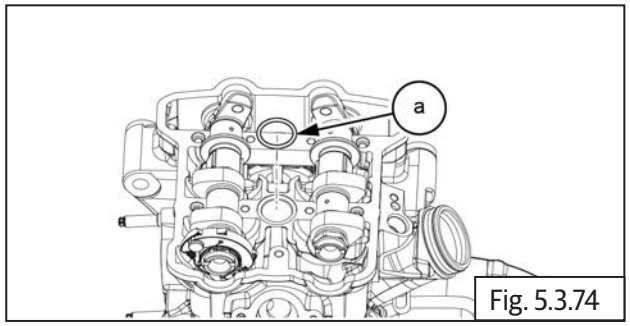

Fig. 5.3.74

- Remove the dowel pins **(a)** 4 Nos. from cylinder head.

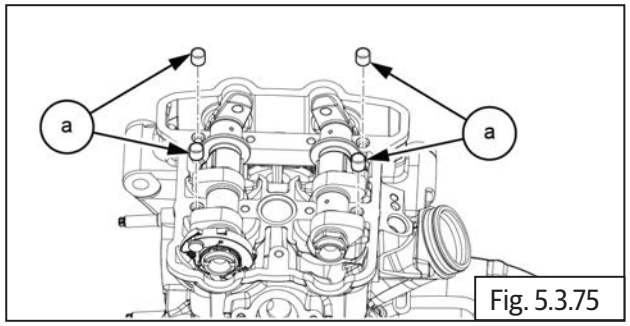

Fig. 5.3.75

- Remove the cam shaft **(a)** 2 Nos. from cylinder head.

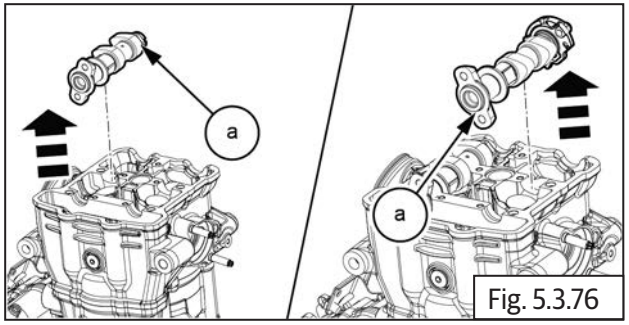

Fig. 5.3.76

- Remove the circlip **(a)** from exhaust cam shaft.

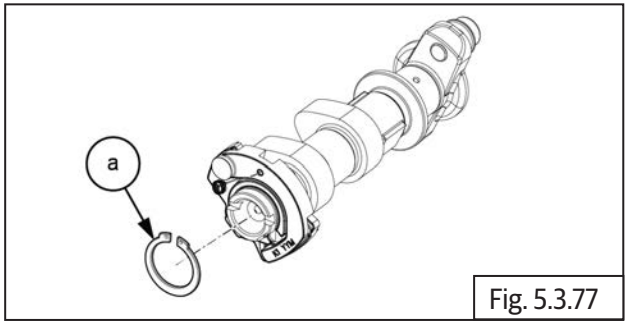

Fig. 5.3.77

	Circlip Plier

- Remove decompresser **(a)** from cam shaft.

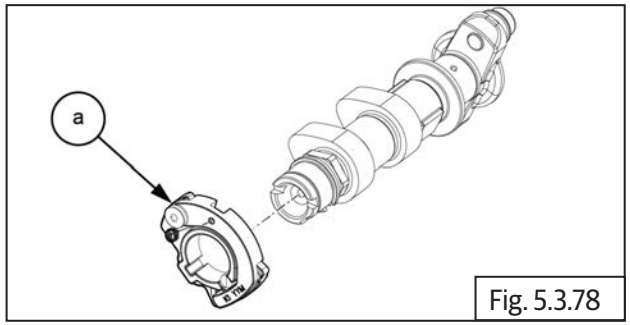

Fig. 5.3.78

- Remove the pivot bolt from **(a)** from decompresser.
- Separate the below parts:
- **b** . Decompresser weight.
- **c**.Pin Assembly.
- **d**. spring.

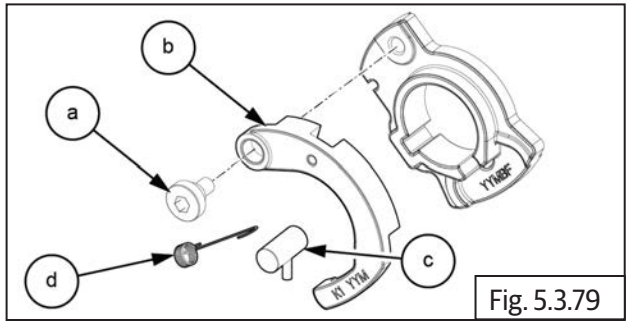

Fig. 5.3.79

	3mm Allen key

5.3.20 Cylinder Head Removal:

- Remove the inlet and exhaust tappet buckets **(a)** 4 Nos. Using magnetic stick.

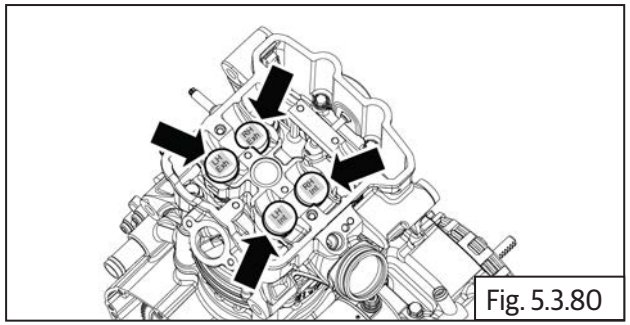

Fig. 5.3.80

	Magnetic stick

- Remove the shims **(a)** 4 Nos. from retainer using magnetic stick.

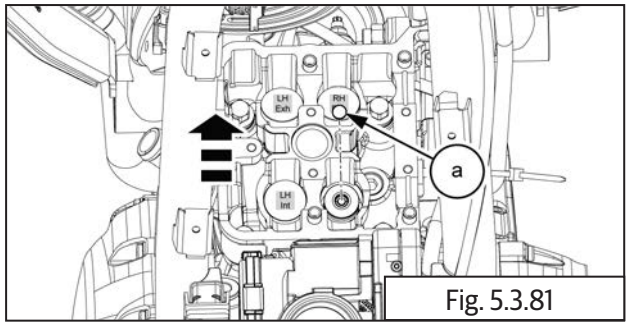

Fig. 5.3.81

	Magnetic stick

- Loosen and remove noise suppressor bolt and seal **(a)** from cylinder head.

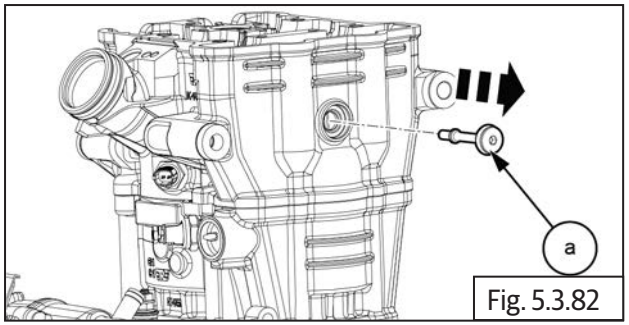

Fig. 5.3.82

	5 mm allen key with Ratchet

- Loosen and remove 2 Nos. Hex head long bolts **(M6) (a)** along with washer **(b)** on cylinder head.

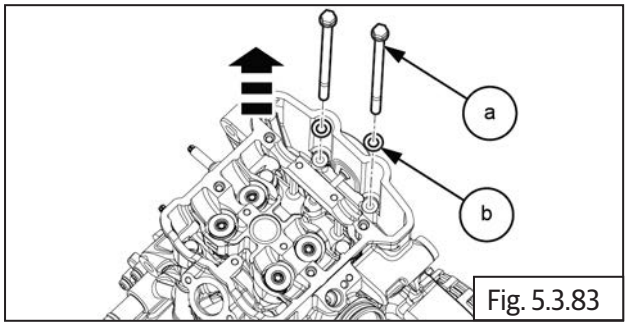

Fig. 5.3.83

	8 mm socket with Ratchet

- Loosen and remove 4 Nos. Hex head long bolts **(M10) (a)** along with flat washer **(b)** in crisscross pattern on cylinder head.

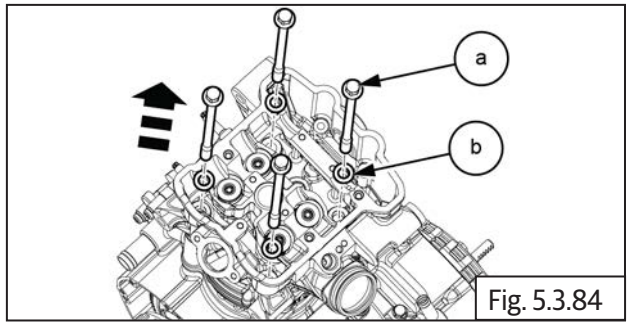

Fig. 5.3.84

	12 mm socket with Ratchet

⚠ CAUTION

The cylinder head bolts are one time use, do not reuse the bolts.

- Support cam chain suitably and gently remove cylinder head **(a)** from cylinder barrel.

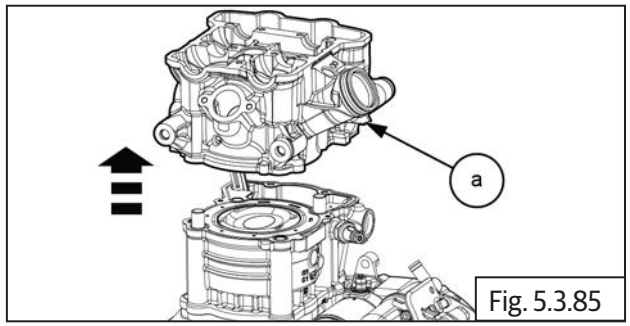

Fig. 5.3.85

- Remove the cylinder head gasket (a) from cylinder barrel.

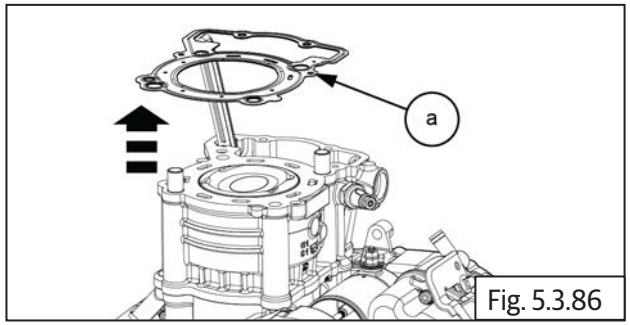

Fig. 5.3.86

- Remove the dowel pins **(a)** 2 Nos. from cylinder barrel.

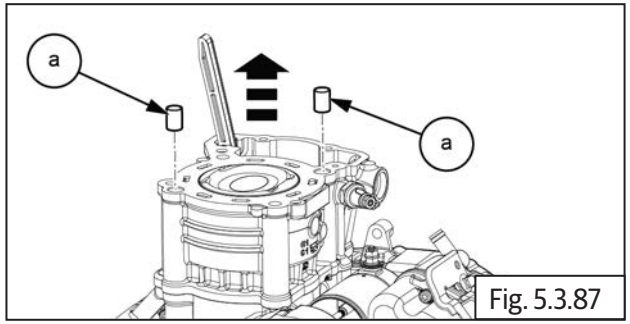

Fig. 5.3.87

5.3.21 Cylinder Head Valve Removal:

- Compress valve spring with special tool **(a)**.

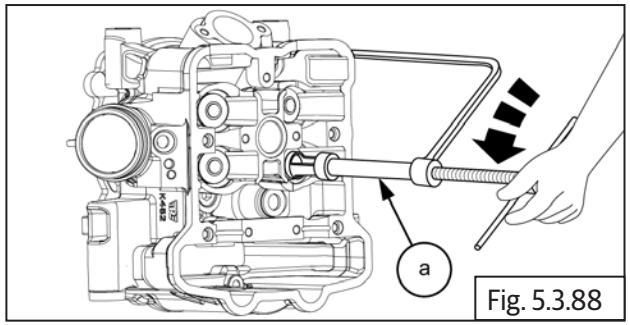

Fig. 5.3.88

SPL	Part No: ST-27528-2
	Part Name: Valve spring compressor

- Remove the cotters **(a)** on valve stem at the top using magnetic stick.

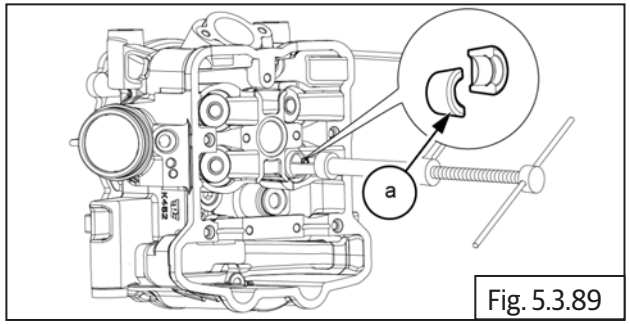

Fig. 5.3.89

	Magnetic stick

SPL	Part No: ST-27528-2
	Part Name: Valve spring compressor

- Gently loosen the screw on valve spring compressor, till the valve spring tension is completely released and remove the special tool.

⚠ CAUTION

Valve spring under high tension when compressed.

Release valve spring compressor tool slowly and with care.

- Remove the retainer, valve spring **(a)** form the top of the valve spring.

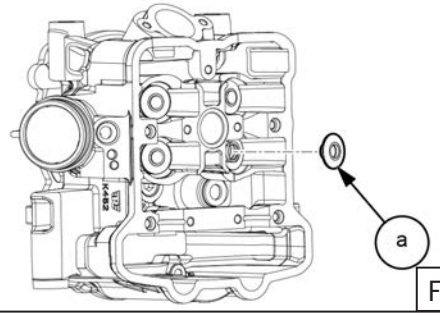

Fig. 5.3.90

- Remove the valve spring **(a)** from valve stem.

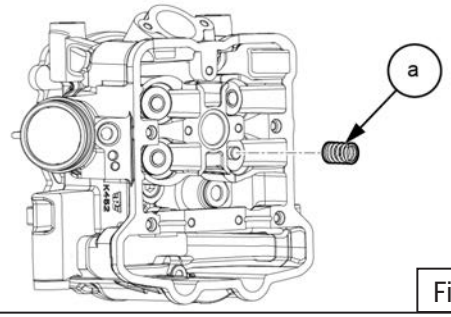

Fig. 5.3.91

- Remove the valve seat springs 4 Nos **(a)** form cylinder head.

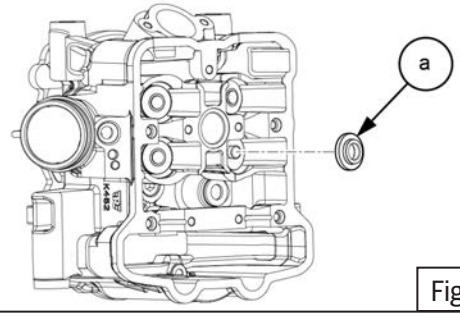

Fig. 5.3.92

- Push valve **(a)** down from the top side of the cylinder head. Pull and remove valve **(a)** down from the bottom side of the cylinder head.

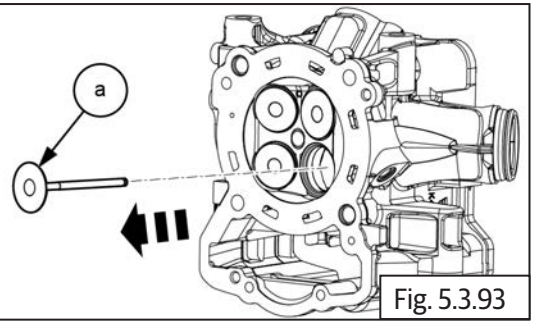

Fig. 5.3.93

- Follow the same procedure to remove the other valves from the cylinder head.

5.3.22 Piston Barrel Removal:

- Remove the cam chain guide **(a)** from front end of the cylinder barrel.

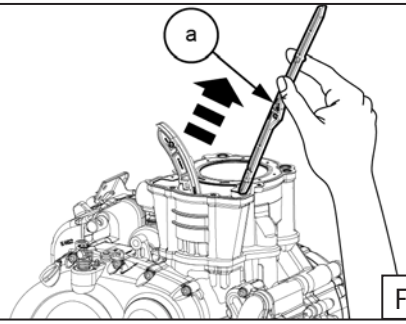

Fig. 5.3.94

- Support cam chain suitably.
- Gently remove cylinder barrel **(a)** from crankcase.

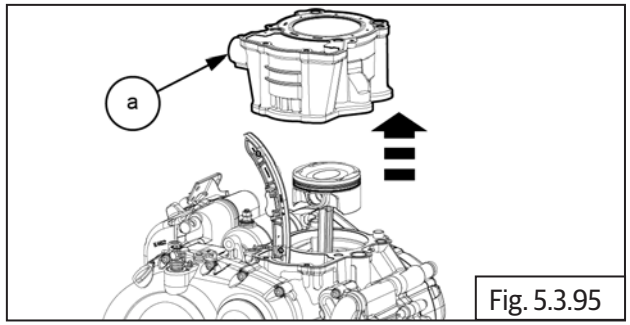

Fig. 5.3.95

5.3.23 Piston Removal:

- Remove the circlip **(a)** from outer side of piston.

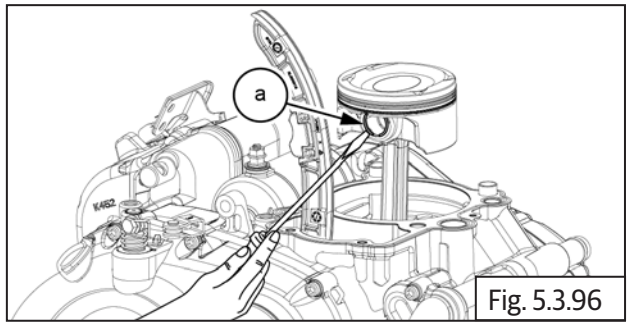

Fig. 5.3.96

	Screwdriver

- Gently push out gudgeon pin **(a)** from inner side of piston and ensure it has completely come out of the connecting rod, to release piston from the connecting rod.

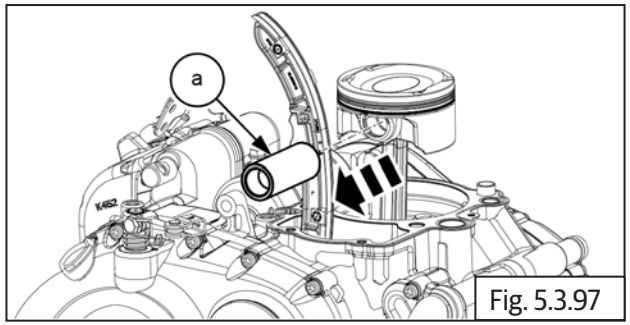

Fig. 5.3.97

- Remove the gasket **(a)** from crankcase.

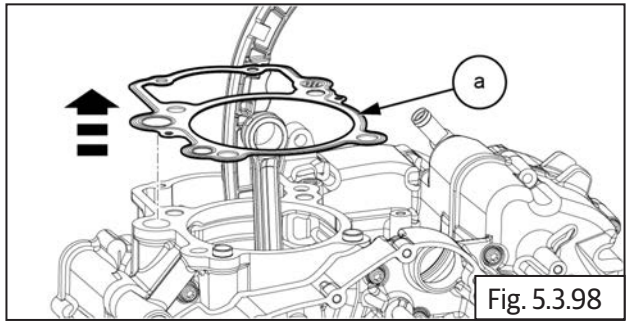

Fig. 5.3.98

- Remove the dowel pins **(a)** 2 Nos. from crankcase.

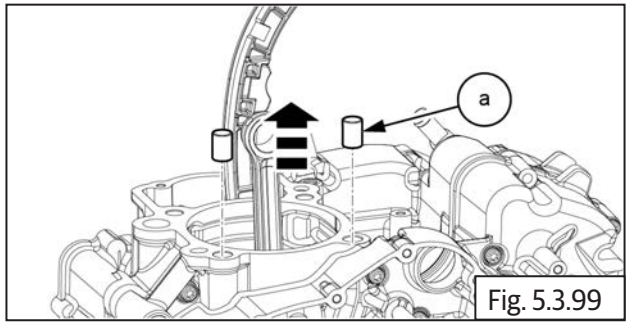

Fig. 5.3.99

5.3.24 Piston Ring Removal:

- Gently lift and remove piston ring top **(a)** 2 Nos. from piston.

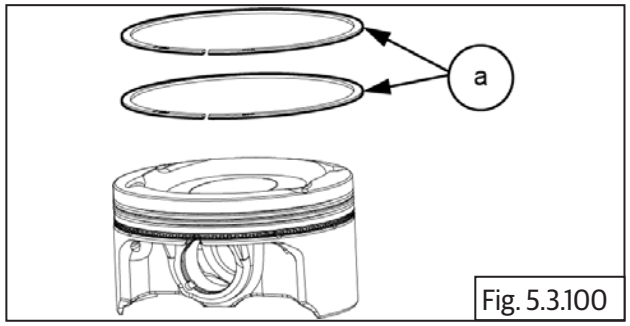

Fig. 5.3.100

- Gently lift and remove top rail **(a)** & bottom rail fixing **(b)** from piston.

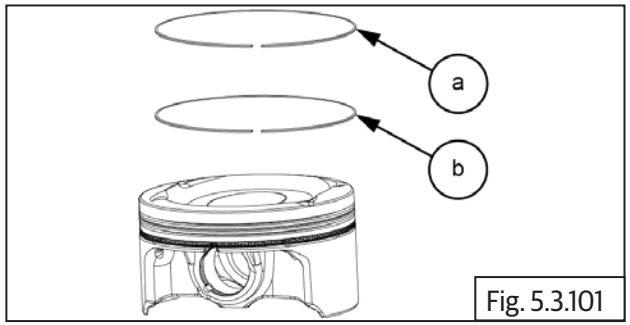

Fig. 5.3.101

- Gently lift and remove oil ring **(a)** from piston.

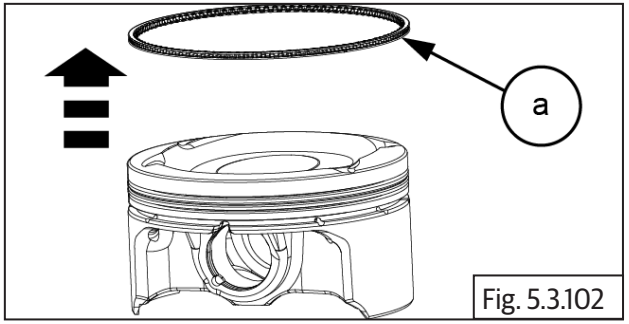

Fig. 5.3.102

5.3.25 Clutch & Drive Sprocket Removal:

- Locate the special tool **(a)** to lock the connecting rod **(b)**.

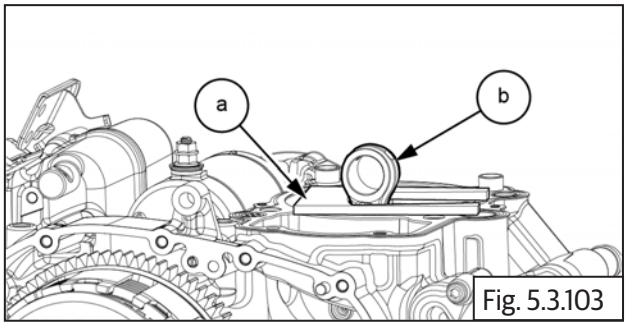

Fig. 5.3.103

SPL	Part No: ST-27529-2
	Part Name: Connecting rod holder

- Insert special tool **(a)** in crankcase RH to lock the crankshaft and prevent rotation.

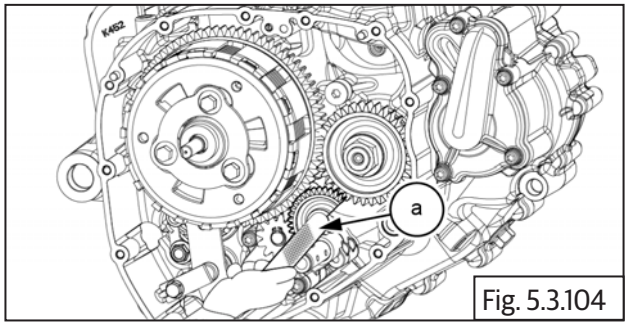

Fig. 5.3.104

SPL	Part No: ST275332
	Part Name: Crank gear locking tool

- Mark the position of clutch plates with a marker before dismantling.

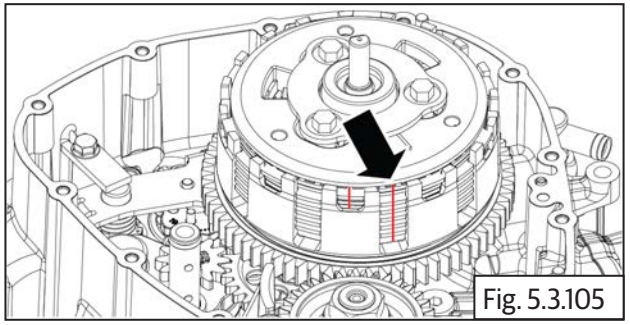
Fig. 5.3.105

- Loosen and remove 3 Nos. Hex flange head bolts **(M6) (a)** on the pressure plate evenly and slowly until tension is released completely.

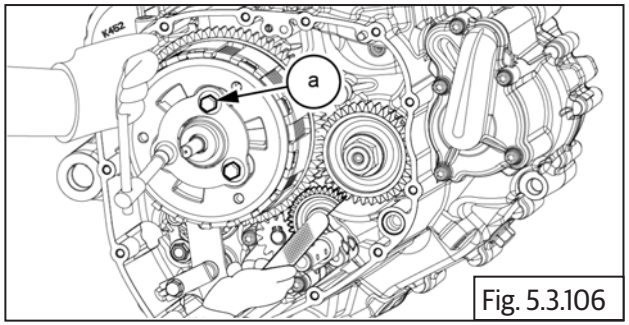

Fig. 5.3.106

	10 mm Socket with Ratchet

- Remove stopper plate **(a)** from clutch hub.

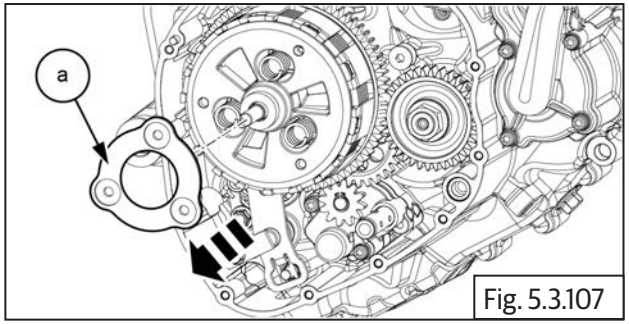

Fig. 5.3.107

- Remove the spring **(a)** 3 Nos. from clutch hub.

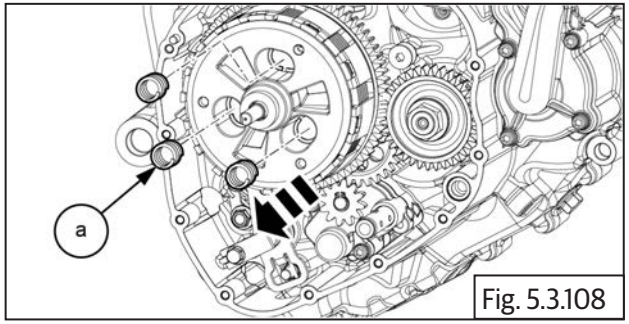

Fig. 5.3.108

- Remove pressure plate **(a)** from clutch assembly.

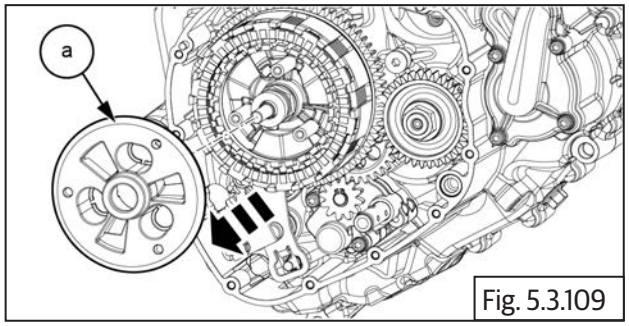

Fig. 5.3.109

- Remove pull rod **(a)** from clutch assembly.

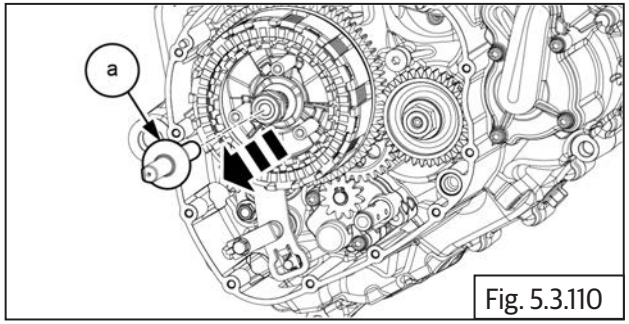

Fig. 5.3.110

- Remove friction plate **(a)** and metal plate assembly **(b)** from clutch hub.

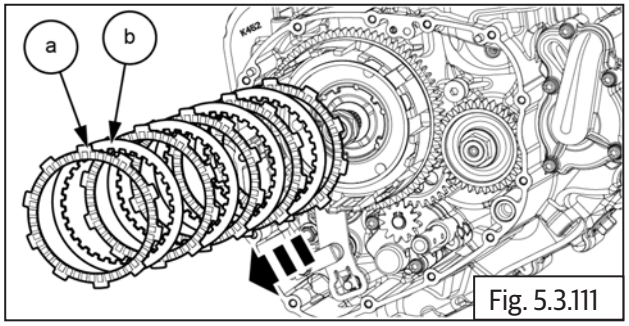

Fig. 5.3.111

- Remove the washer **(a)** & spring **(b)** from clutch assembly.

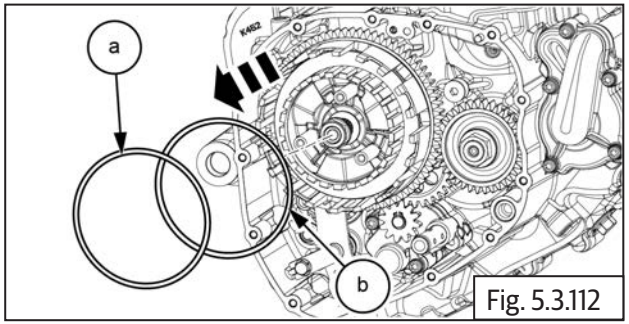

Fig. 5.3.112

- Locate special tool **(a)** on clutch center **(b)** and ensure it is seated fully on the splines.
- Hold the clutch center firmly and remove Hex "U" nut **(M17) (b)** by rotating clockwise.

⚠ CAUTION

Hex "U" nut is a left hand thread. Wrong rotation may damage the threads.

- Locate the special tool **(a)** to lock the connecting rod.

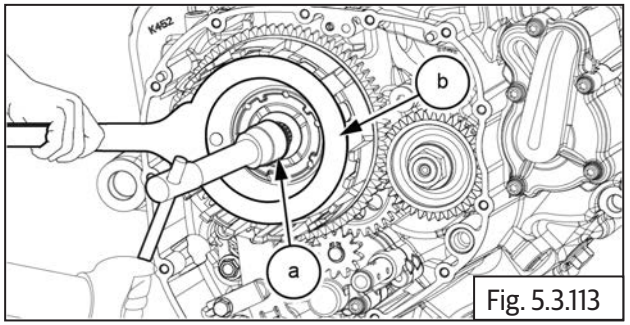

Fig. 5.3.113

SPL 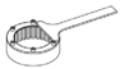	Part No: ST30266/a
	Part Name: Clutch holder

	27 mm socket with Ratchet

- Remove nut **(a)** conical washer **(b)** and flat washer **(c)**.

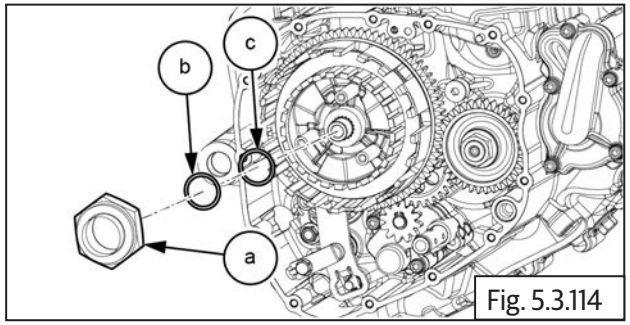

Fig. 5.3.114

- Remove the center clutch **(a)** along with washer **(b)**.

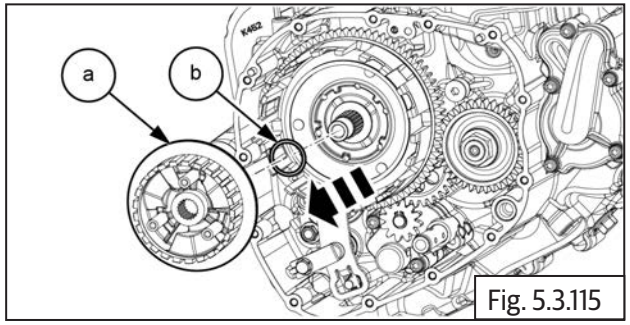

Fig. 5.3.115

- Remove the clutch outer drum assembly **(a)** from crankcase.

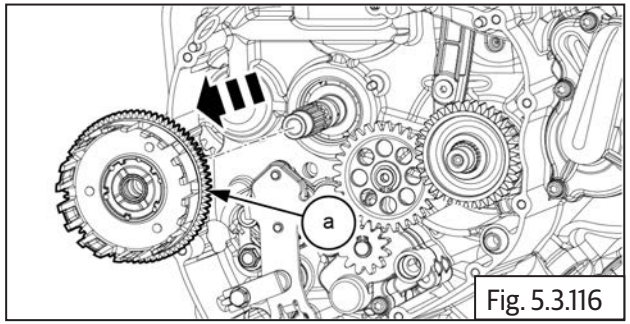

Fig. 5.3.116

- Remove the spacer **(a)**, needle roller bearing **(b)**, spacer **(c)** & needle roller bearing **(d)** from clutch outer drum assembly.

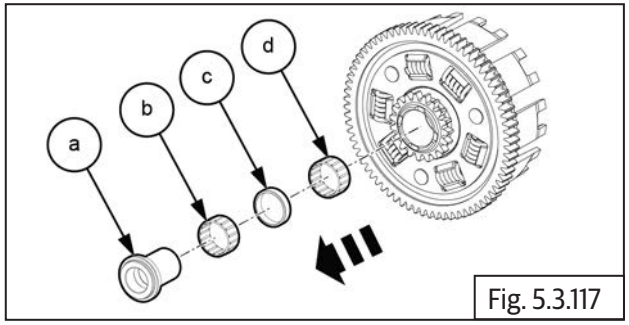

Fig. 5.3.117

5.3.26 Primary Drive Gear Removal:

- Insert special tool **(a)** in crankcase RH to lock the crankshaft and prevent rotation.

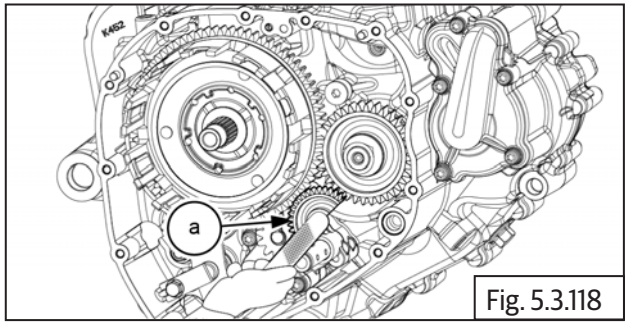

Fig. 5.3.118

SPL	Part No: ST275332
	Part Name: Crank gear locking tool

- Locate special tool **(a)** and remove Hex nut **(M18) (b)** by rotating clockwise

⚠ CAUTION

Crankshaft drive nut is a left hand thread. Rotate clockwise to loosen the nut.

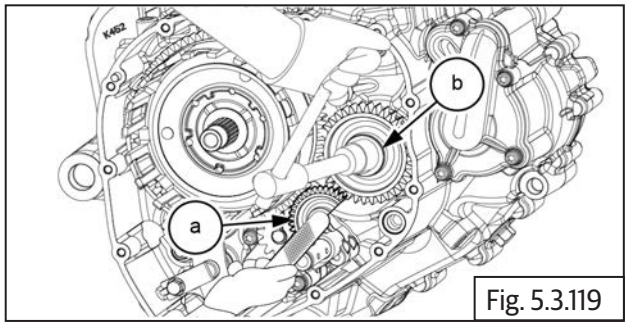

Fig. 5.3.119

SPL	Part No: ST275332
	Part Name: Crank gear locking tool

	24 mm Socket with Ratchet

- Remove the crank nut **(a)** along with washer **(b)**.

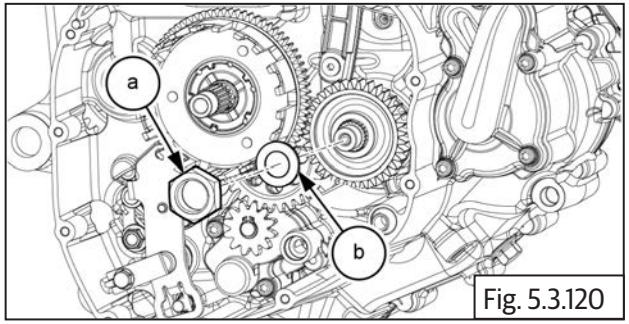

Fig. 5.3.120

- Remove the primary drive gear **(a)** from crankshaft

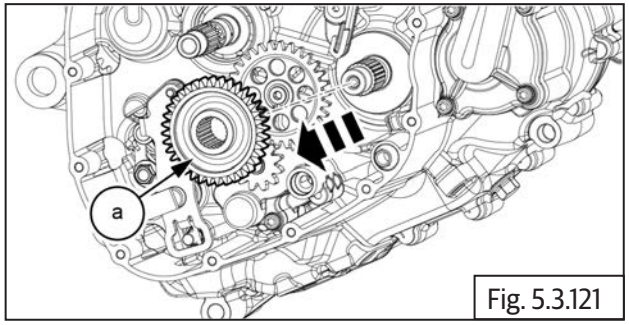

Fig. 5.3.121

- Remove the timing chain **(a)**.

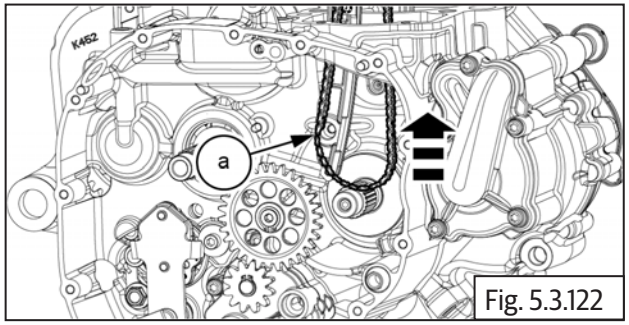

Fig. 5.3.122

- Loosen and remove the cam chain tensioner blade **(b)** bolt **(a)** and washer **(c)**.

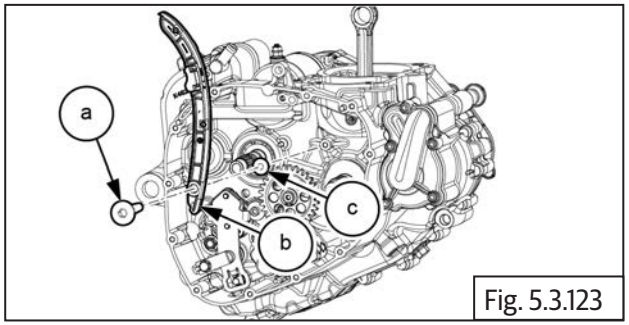

Fig. 5.3.123

	6 mm allen key with Ratchet

- Remove circlip **(a)** from idler gear.

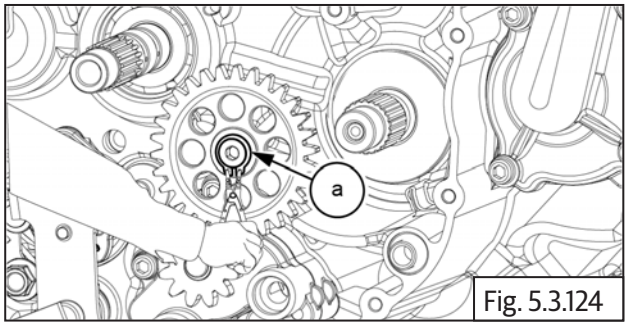

Fig. 5.3.124

	External Circlip Plier

- Remove idler gear **(a)** and washer **(b)**.

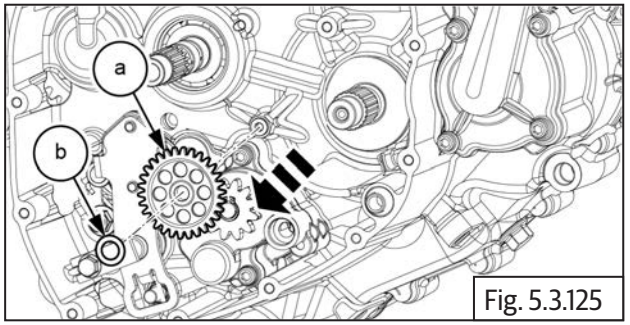

Fig. 5.3.125

- Loosen and remove 1 No. Hex head bolt **(M6) (a)** for idler gear screw with washer **(b)**.

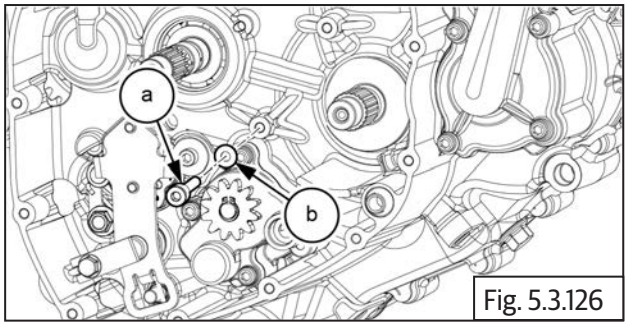

Fig. 5.3.126

	5 mm allen key with Ratchet

- Remove the thrust washer **(a)** from crankshaft

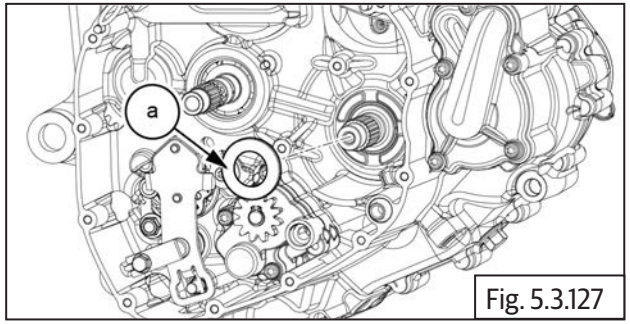

Fig. 5.3.127

5.3.27 Oil Pump Removal:

- Remove circlip **(a)** from oil pump.

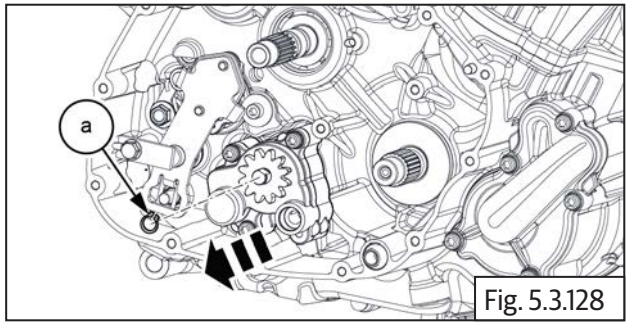

Fig. 5.3.128

	External Circlip Plier

- Loosen and remove 3 Nos. Hex head screws **(M6)** **(a)** from oil pump assembly.

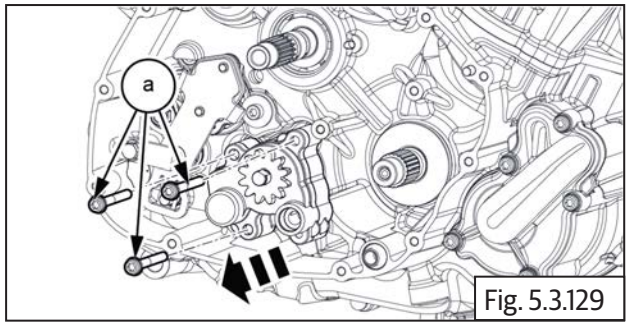

Fig. 5.3.129

	5 mm allen key with Ratchet

- Remove the oil pump assembly **(a)**.

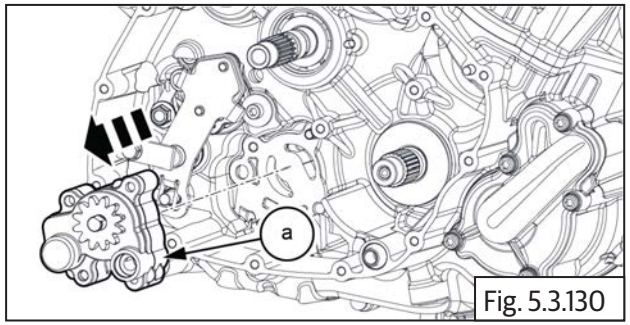

Fig. 5.3.130

5.3.28 Crankcase Oil Jet Removal:

- Using screwdriver to remove crankcase oil jet **(a)** from crankcase.

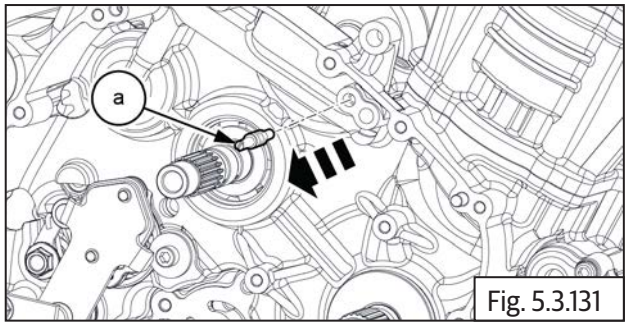

Fig. 5.3.131

	Screwdriver

5.3.29 Water Pump Removal:

- Loosen and remove 5 Nos. Hex head bolts **(M6)** **(a)** along with 1 No. copper washer **(b)** from water pump cover.

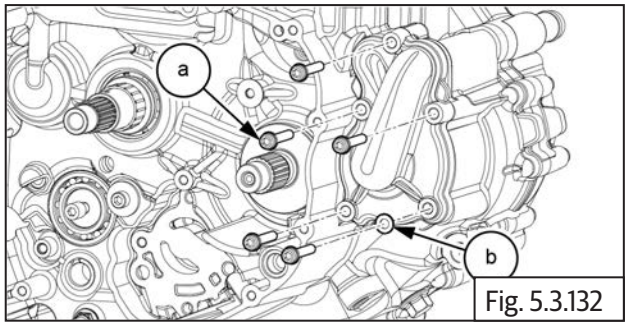

Fig. 5.3.132

	5 mm allen key with Ratchet

- Remove water pump cover **(a)** along with seal from RH crankcase.

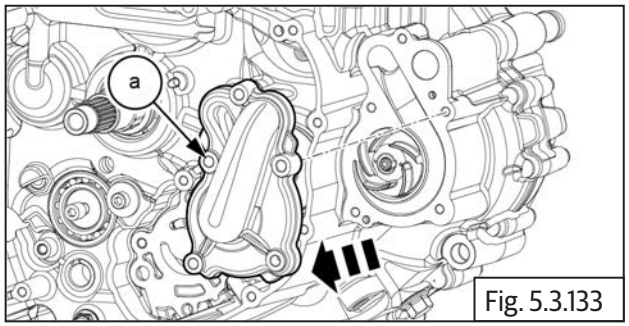

Fig. 5.3.133

- Remove water pump cover seal **(a)**.

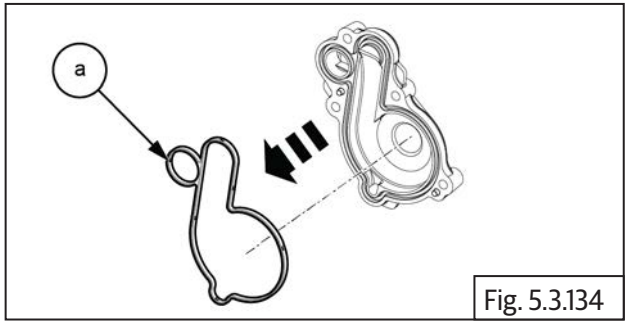

Fig. 5.3.134

- Loosen and Remove 1 No. Hex head bolt **(M5) (a)** along with washer **(b)** from impeller.

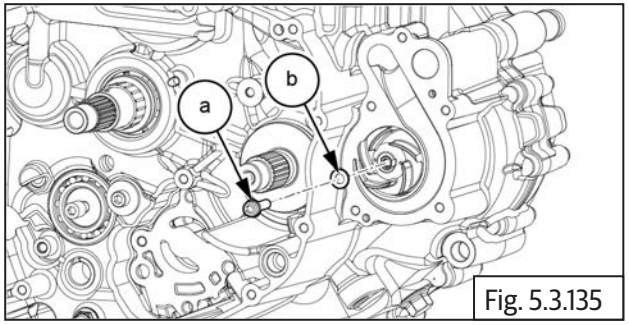

Fig. 5.3.135

	4 mm allen key with Ratchet

- Remove impeller **(a)** from RH crankcase.

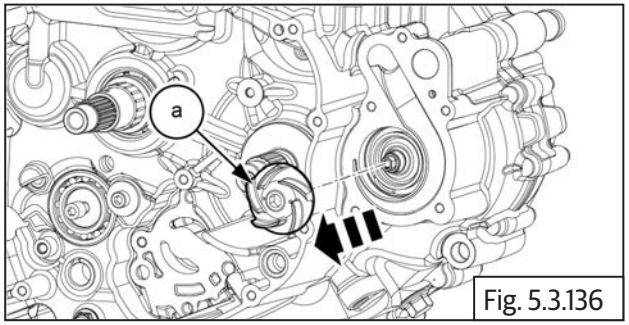

Fig. 5.3.136

- Remove the lip seal **(b)** using screw drive.

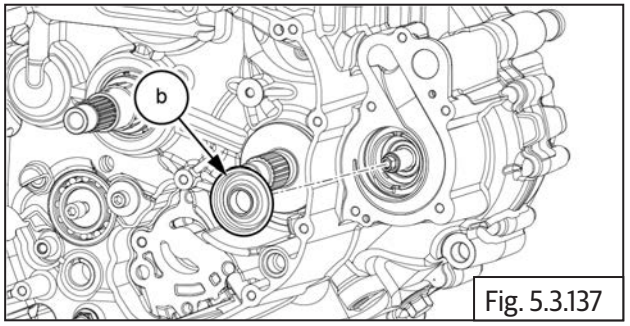

Fig. 5.3.137

	Screwdriver

5.3.30 Magneto Assembly Removal:

- Remove the oil seal **(a)** using screw drive**.**

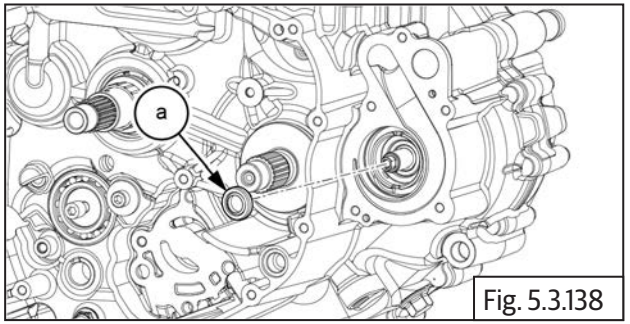

Fig. 5.3.138

	Screwdriver

- Remove the idler shaft **(a)** from crankcase.

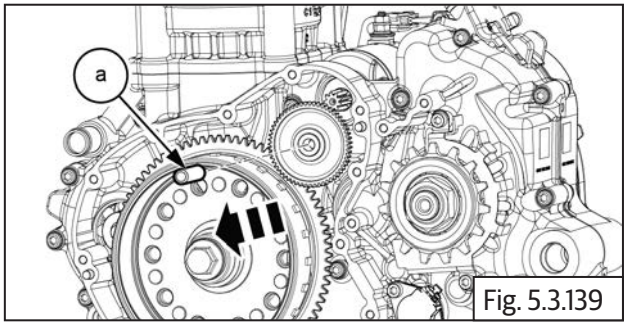

Fig. 5.3.139

- Remove the idler gear **(a)** from crankcase.

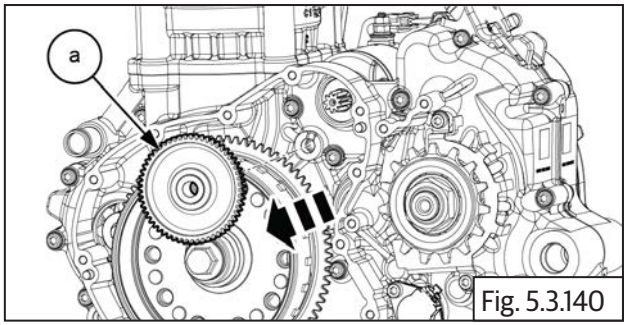

Fig. 5.3.140

- Locate the special tool **(a)** to tighten the magneto rotor **(b)**.

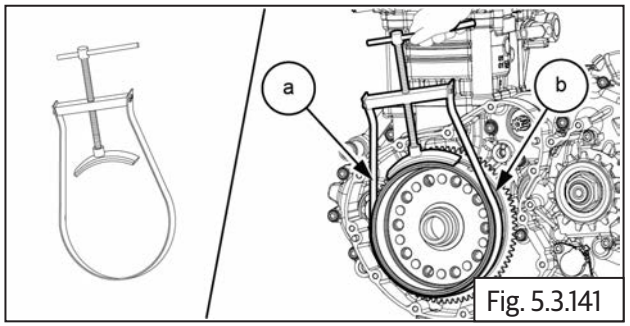

Fig. 5.3.141

SPL	Part No: ST32065/A
	Part Name: Magneto holder

- Loosen and remove 1 No. Hex flange head bolt **(M12) (a)** along with tappet washer **(b)**.

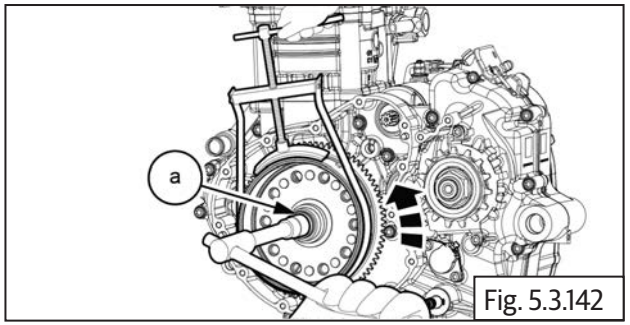

Fig. 5.3.142

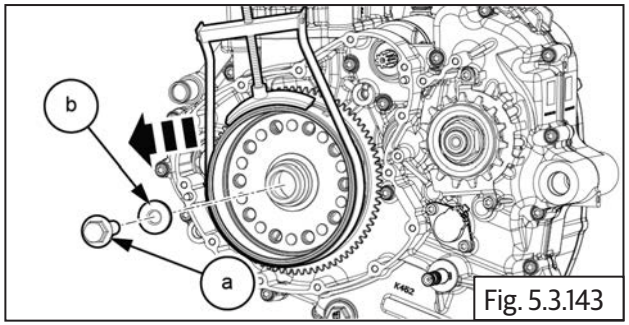

Fig. 5.3.143

	17 mm Socket with Ratchet

- Remove the special tool **(a)** from magneto rotor.

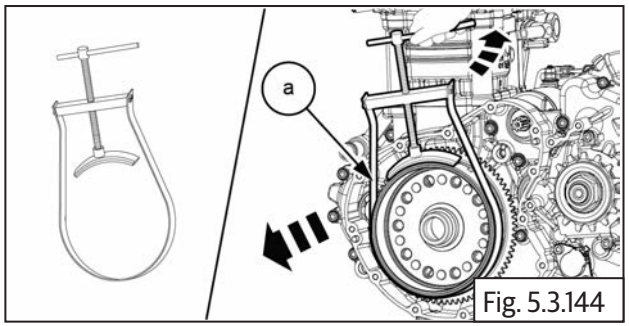

Fig. 5.3.144

SPL	Part No: ST32065/A
	Part Name: Magneto holder

- Assemble puller **(a)** on magneto rotor and thread it in fully.
- Tighten center bolt onto puller till magneto rotor gets released from crankshaft.

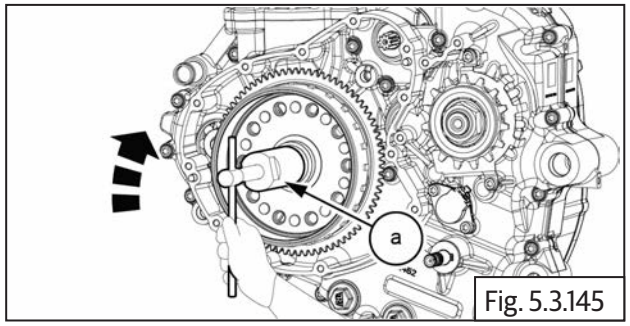

Fig. 5.3.145

SPL	Part No: ST30274/a
	Part Name: Magneto puller assembly

- Gently pull out magneto rotor assembly **(a)** with starter clutch.

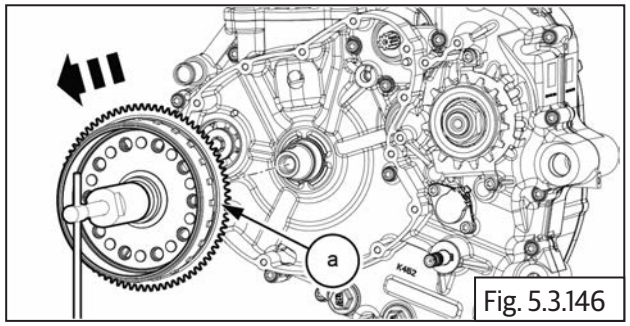

Fig. 5.3.146

- Remove woodruff key **(a)** from crankshaft.

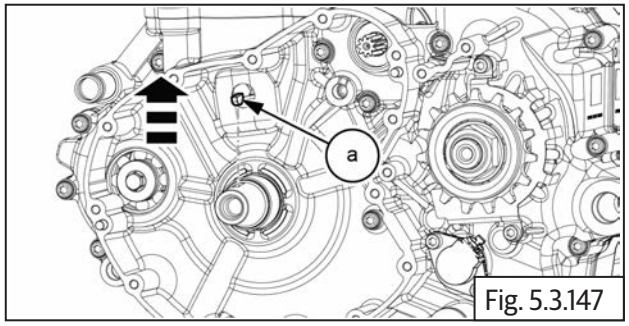

Fig. 5.3.147

- Slightly rotate the starter gear in an anticlockwise direction and Gently lift and remove gear from rotor roller clutch bearing.

⚠ CAUTION

Be careful during this process as the roller clutch bearing may fall down or collapse..

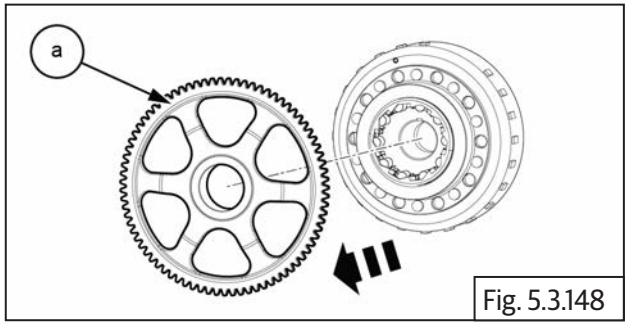

Fig. 5.3.148

5.3.31 Gear shifter shaft Removal:

- Remove circlip **(a)** from the shaft.

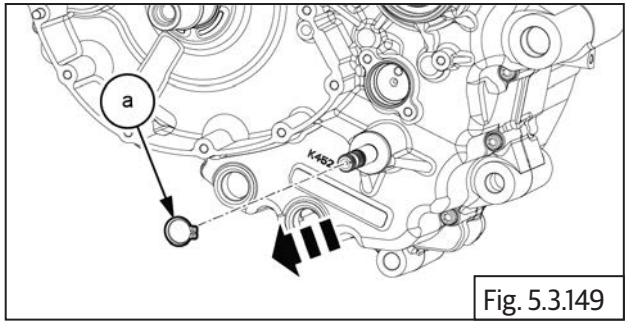

Fig. 5.3.149

	External Circlip Plier

- Remove washer **(a)** from the shifter shaft.

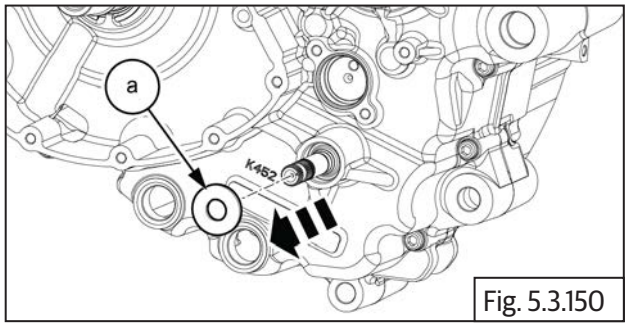

Fig. 5.3.150

- Loosen and remove 1 No. Hex flange head bolt **(M6) (a)** and stopper bracket **(b)**.

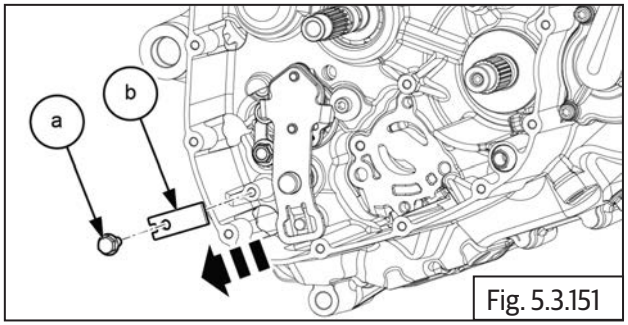

Fig. 5.3.151

	10 mm Socket with Ratchet

- Gently pull out shifter shaft assembly **(a)** from engine RH side.

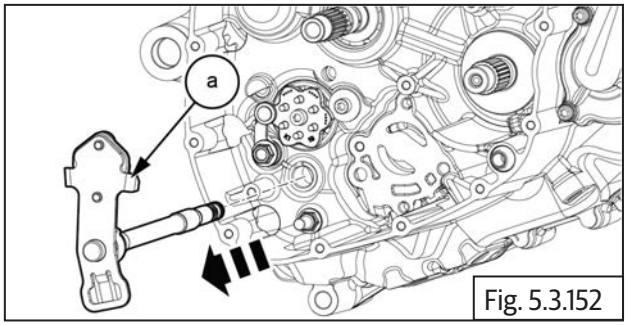

Fig. 5.3.152

- Remove circlip **(a)** washer **(b)** and expand spring legs and pull out spring **(c)** from longer end of shifter shaft.

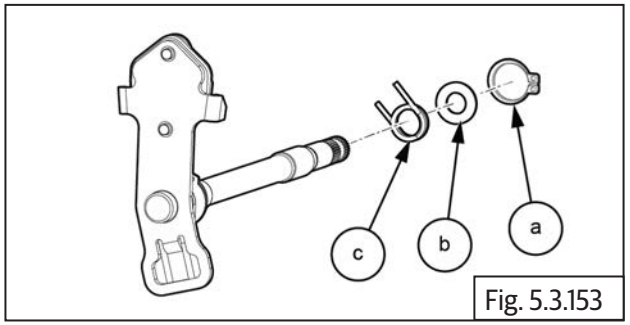

Fig. 5.3.153

- Remove the oil seal **(a)** from RH crankcase.

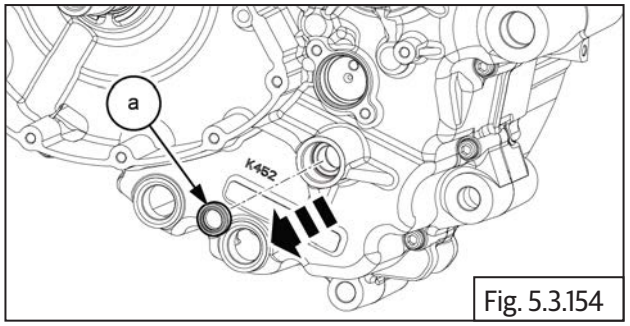

Fig. 5.3.154

	Screwdriver

- Loosen and remove 1 No. Hex flange head bolt **(M6) (a)** from gear stopper bracket.

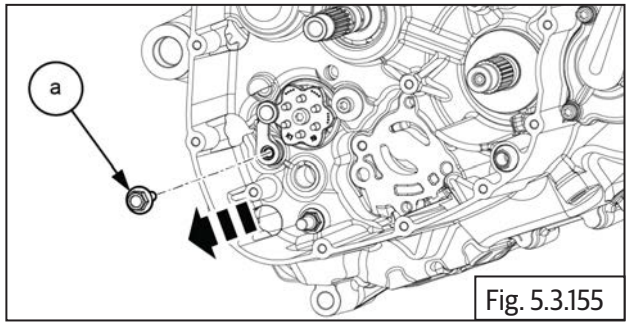

Fig. 5.3.155

	10 mm Socket with Ratchet

- Remove the gear stopper bracket **(a)** along with washer **(b)** from RH crankcase.

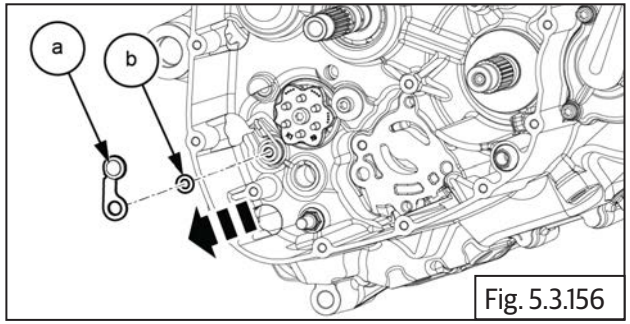

Fig. 5.3.156

- Remove the spring **(a)** from RH crankcase.

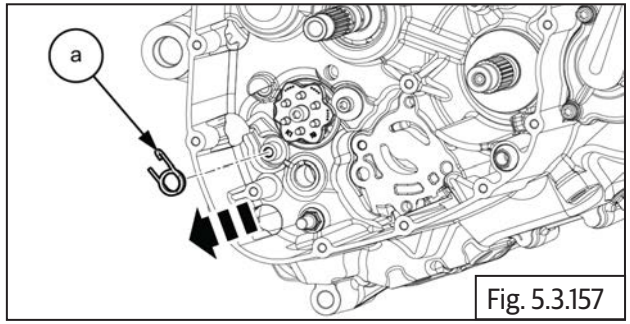

Fig. 5.3.157

- Loosen and remove 1 No. Hex flange head bolt **(M6) (a)** from star index.

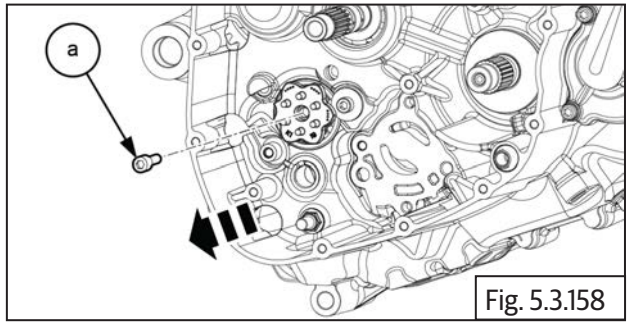

Fig. 5.3.158

	5 mm Allen key with Ratchet

- Remove the star index **(a)** from RH crankcase.

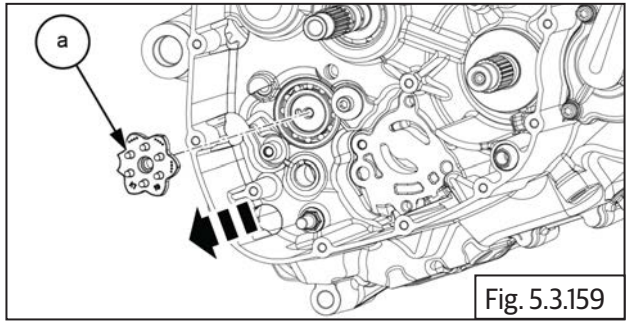

Fig. 5.3.159

5.3.32 RH Crankcase Removal:

- Loosen and remove 1 No. Hex flange head bolt **(M6) (a)** along with washer **(b)** from balancer shaft assembly.

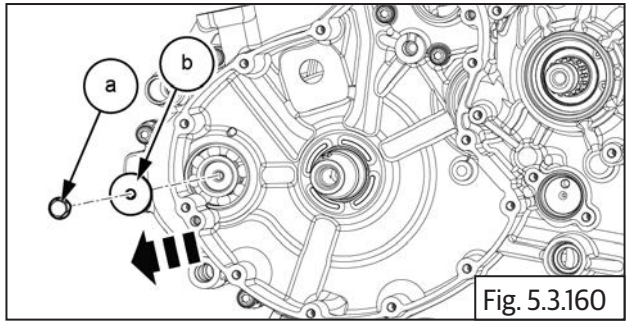

Fig. 5.3.160

	10 mm socket with Ratchet

- Remove the special tool **(a)** from connecting rod **(b)**.

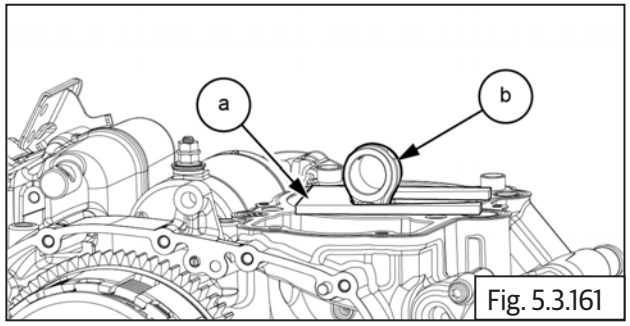

Fig. 5.3.161

SPL	Part No: ST-27529-2
	Part Name: Connecting rod holder

- Loosen and remove 19 Nos. Hex socket screws **(M6) (a)** in a crisscross pattern RH crankcase cover.

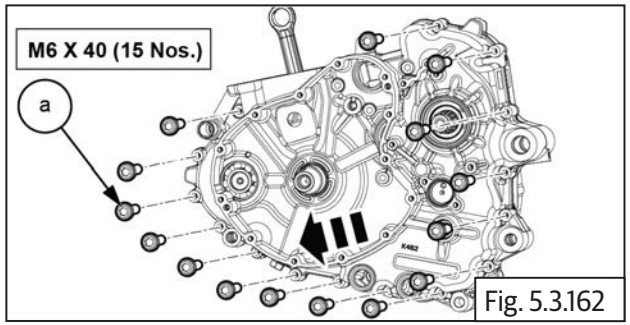

Fig. 5.3.162

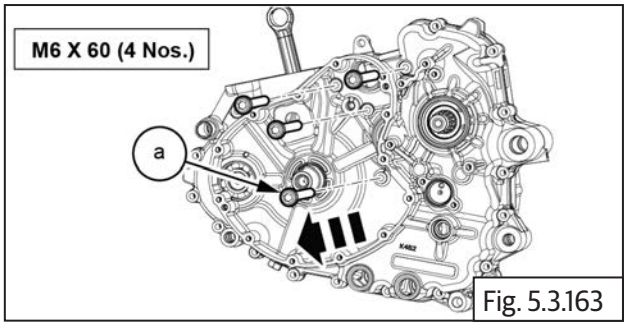

Fig. 5.3.163

	5 mm Allen key with Ratchet

- Gently remove the RH crankcase **(a)**.

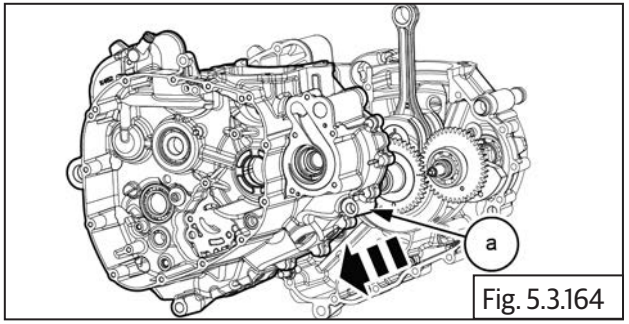

Fig. 5.3.164

5.3.33 Crankshaft And Mass Balancer Removal:

- Rotate the crankshaft assembly **(a)** and mass balancer **(b)**.

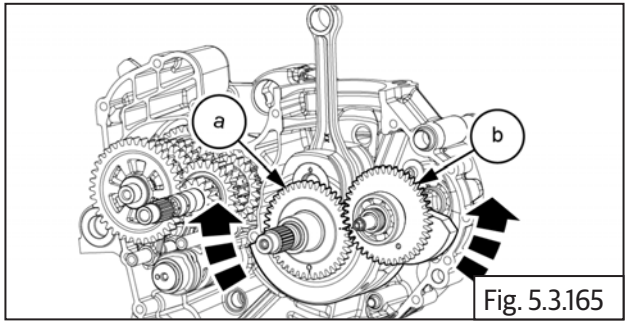

Fig. 5.3.165

- Remove the mass balancer assembly **(a)** from the crankcase.

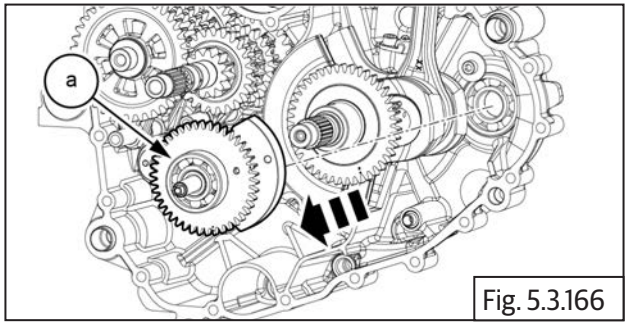

Fig. 5.3.166

- Rotate the crankshaft assembly.

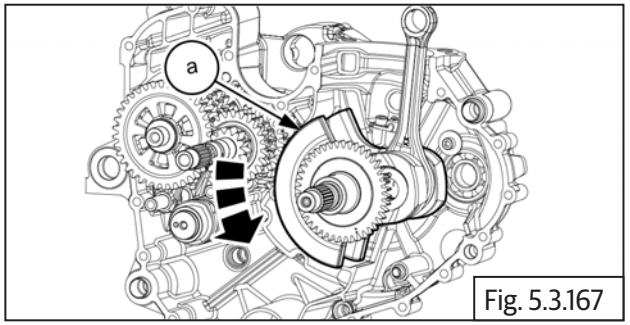

Fig. 5.3.167

- Remove the crankshaft assembly **(a)** from the crankcase.

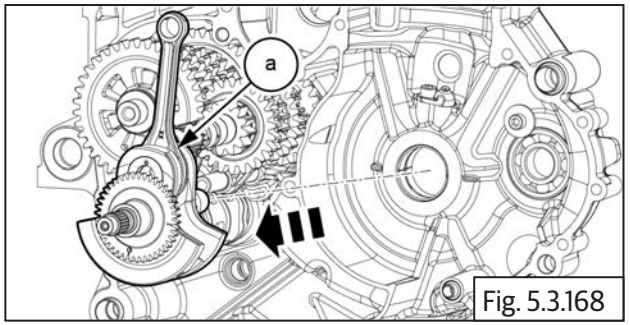

Fig. 5.3.168

5.3.34 Gear Assembly Removal:

- Remove the shaft, gear shift fork (input) **(a)**.

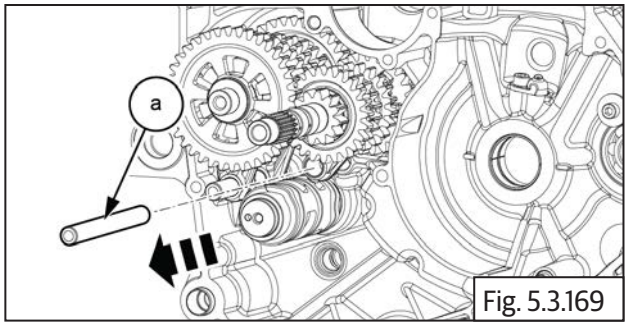

Fig. 5.3.169

- Remove the gear shifter fork **(a)** 1 No. from counter shaft.

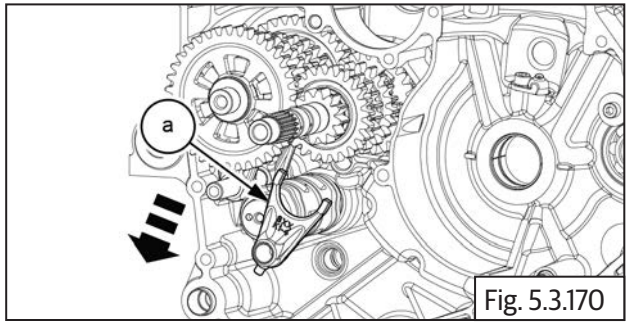

Fig. 5.3.170

- Remove the shaft, gear shift fork (input) **(a)**.

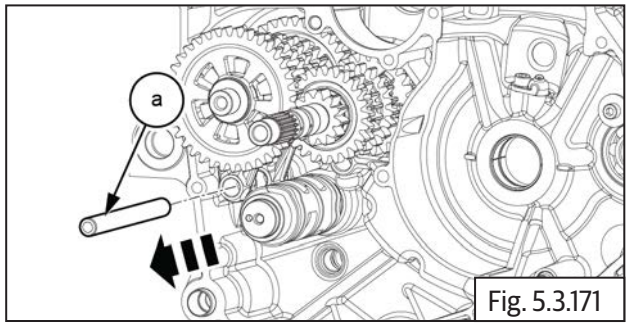

Fig. 5.3.171

- Remove the gear shifter fork **(a)** 2 Nos. from drive shaft.

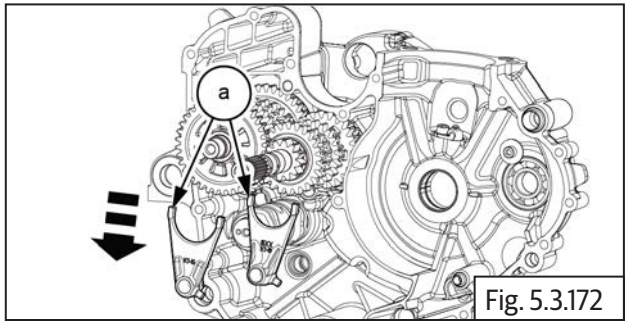

Fig. 5.3.172

- Remove the shifter drum **(a)** from crankcase LH.

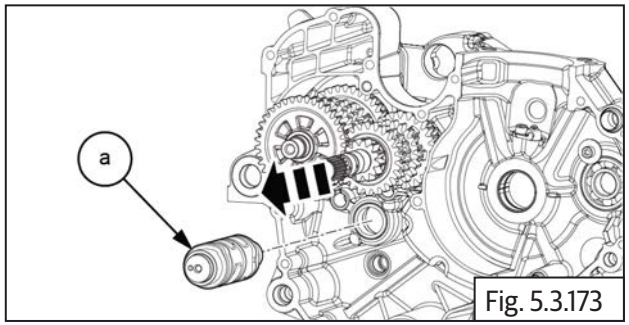

Fig. 5.3.173

- Remove the gear box assembly **(a)** from crankcase LH.

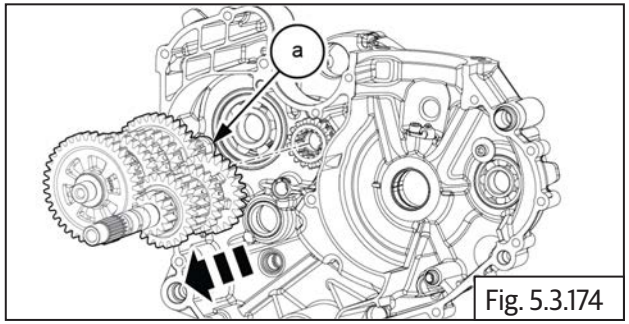

Fig. 5.3.174

- Gear selector Exploded View.
  a. Selector Drum
  b. Selector Forks
  c. Spindles

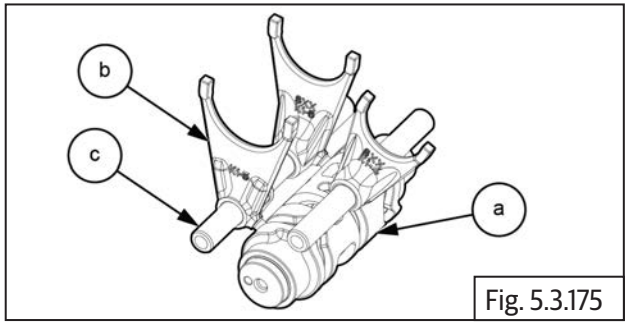

Fig. 5.3.175

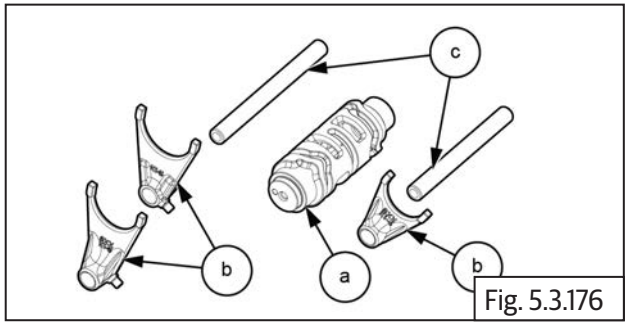

Fig. 5.3.176

5.3.35 LH Crankcase Removal:

- Remove the 2 Nos. O-rings **(a)** from crankcase LH.

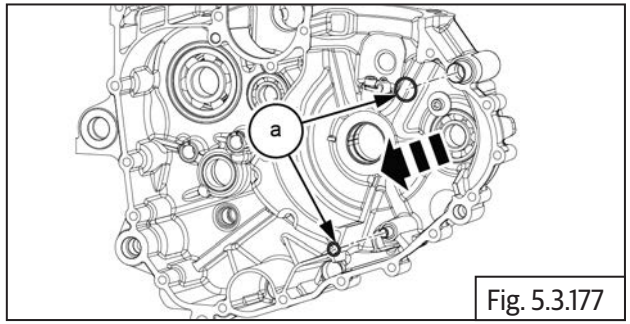

Fig. 5.3.177

- Remove the dowel pin **(a)** from crankcase LH.

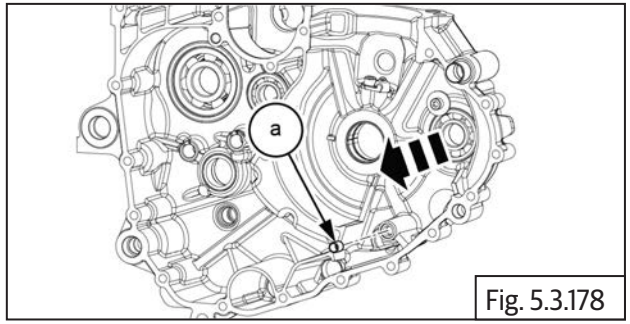

Fig. 5.3.178

5.3.36 Countershaft Removal:

- Remove the thrust washer **(a)** from countershaft.

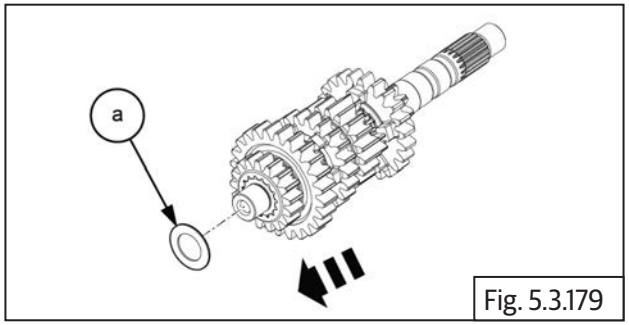

Fig. 5.3.179

- Remove the 2nd drive gear **(a)** from countershaft.

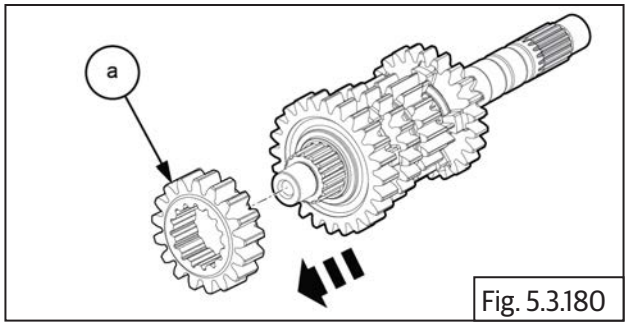

Fig. 5.3.180

- Remove the 6th drive gear **(a)** from countershaft.

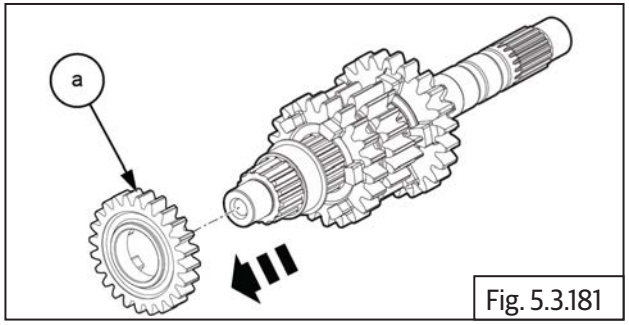

Fig. 5.3.181

- Remove the plain bush **(a)** from countershaft.

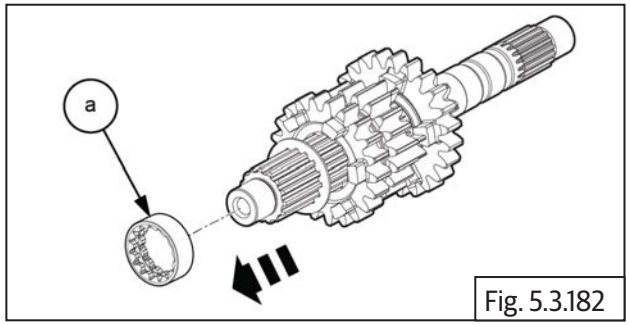

Fig. 5.3.182

- Remove the washer **(a)** from countershaft.

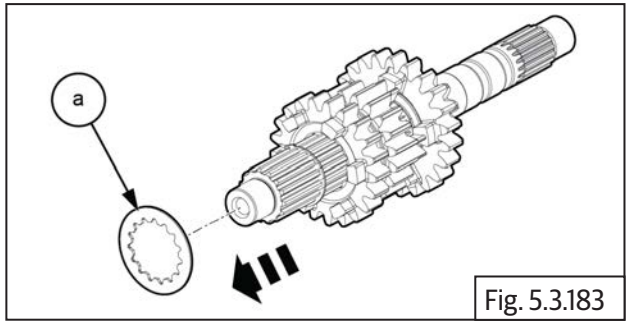

Fig. 5.3.183

- Remove the circlip **(a)** from countershaft.

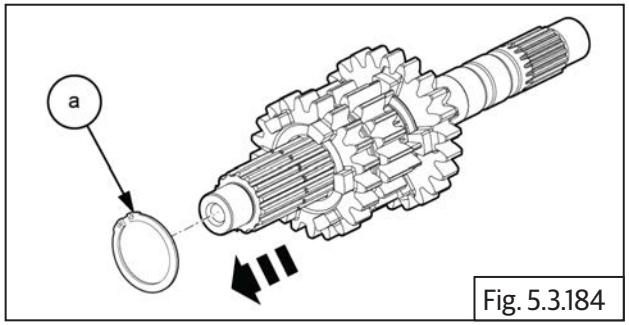

Fig. 5.3.184

	Circlip plier

- Remove the 3rd drive gear **(a)** from countershaft.

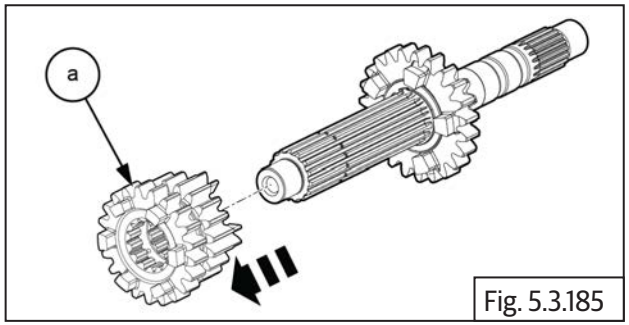

Fig. 5.3.185

- Remove the circlip **(a)** from countershaft.

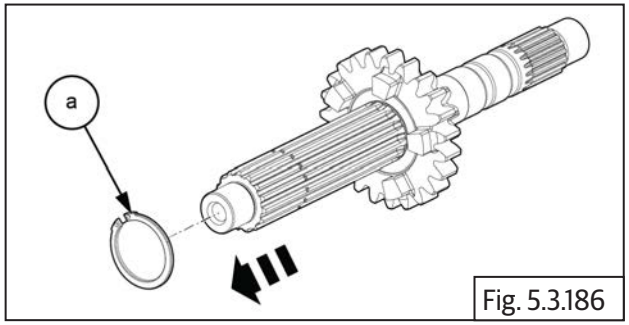

Fig. 5.3.186

	Circlip plier

- Remove the thrust washer **(a)** 5th drive gear **(b)** and bush **(c)** from countershaft.

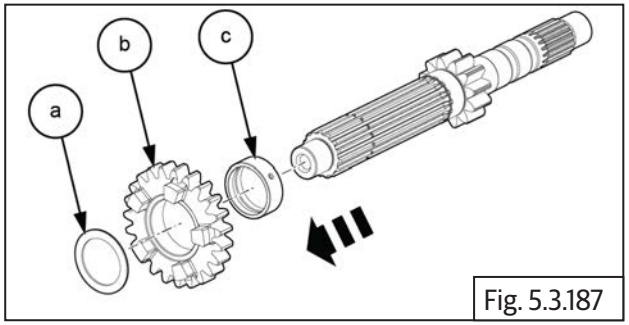

Fig. 5.3.187

5.3.37 Drive Shaft Removal:

- Remove the thrust washer **(a)** from drive shaft.

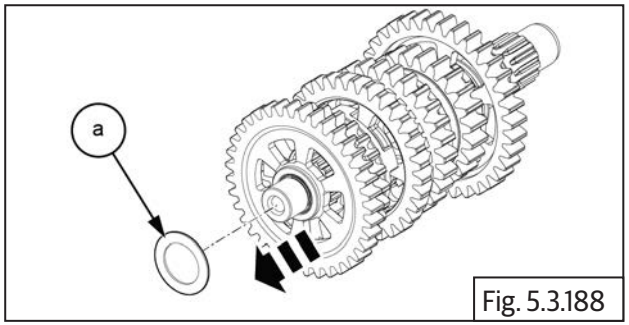

Fig. 5.3.188

- Remove the 1st gear **(a)** along with thrust washer **(b)** from drive shaft.

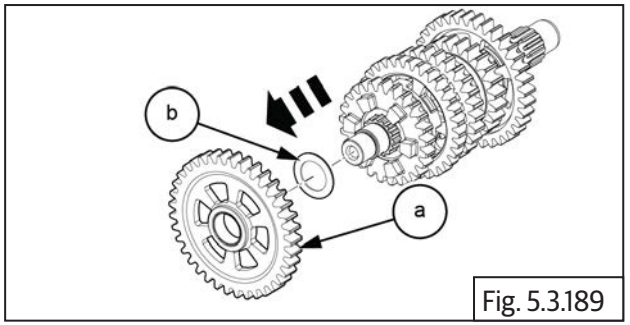

Fig. 5.3.189

- Remove the 5th driven gear **(a)** from drive shaft.

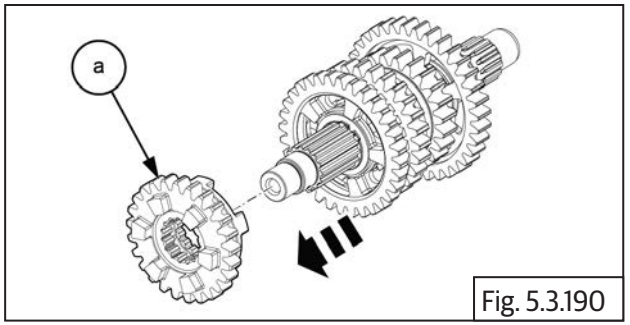

Fig. 5.3.190

- Remove the circlip **(a)** from drive shaft 3rd gear side.

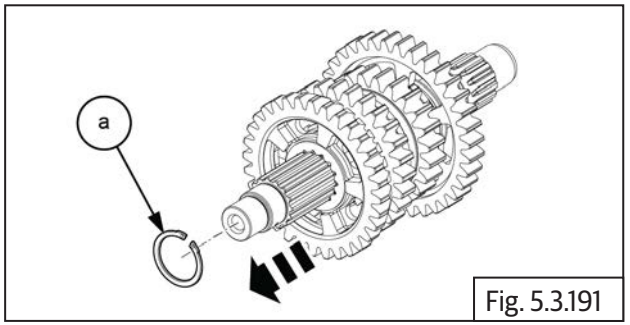

Fig. 5.3.191

	Circlip plier

- Remove the thrust washer **(a)** from drive shaft.

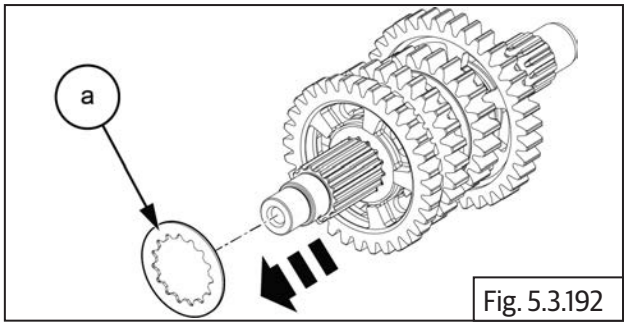

Fig. 5.3.192

- Remove the 3rd driven gear **(a)** from drive shaft.

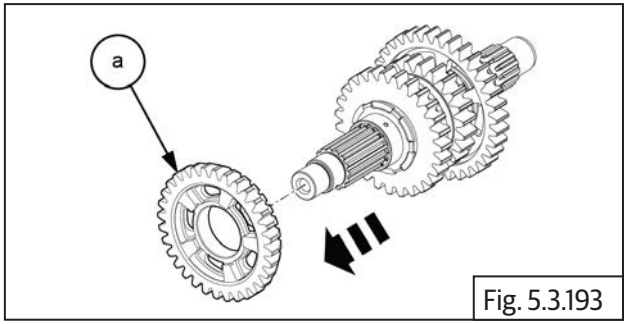

Fig. 5.3.193

- Remove the plain bush **(a)** from drive shaft.

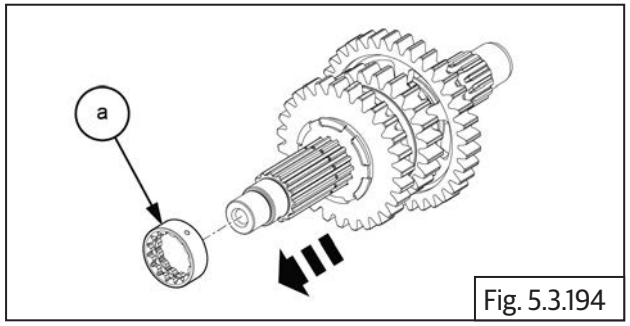

Fig. 5.3.194

- Remove the thrust washer lock **(a)** from drive shaft.

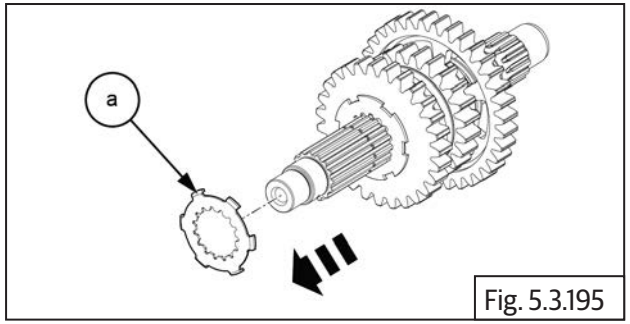

Fig. 5.3.195

- Remove the thrust washer **(a)** from drive shaft.

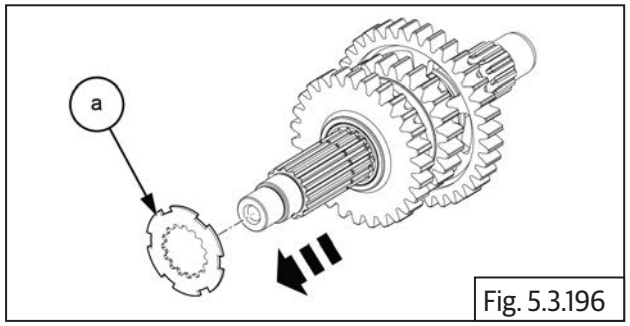

Fig. 5.3.196

- Remove the 4th driven gear **(a)** from drive shaft.

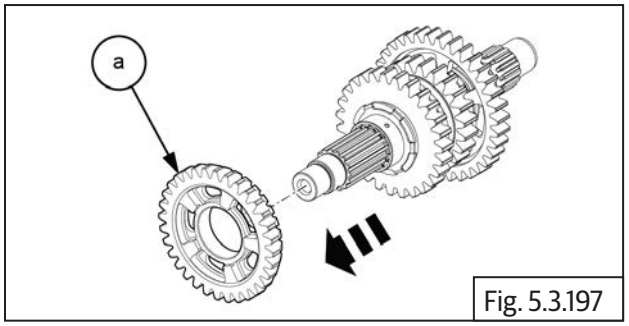

Fig. 5.3.197

- Remove the plain bush **(a)** from drive shaft.

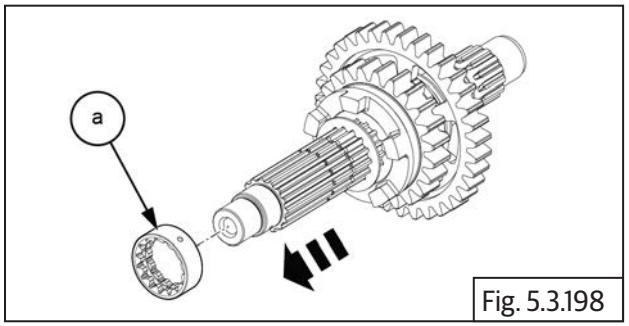

Fig. 5.3.198

- Remove the washer **(a)** from drive shaft.

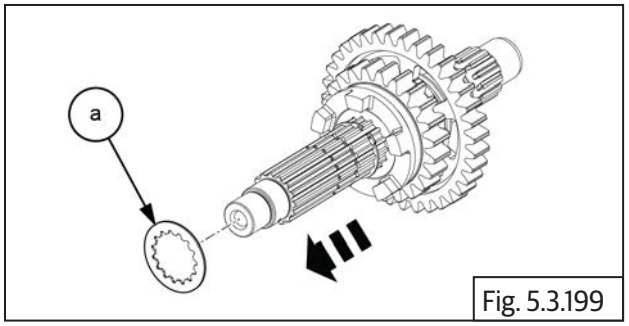

Fig. 5.3.199

- Remove the circlip **(a)** from drive shaft 5th driven gear.

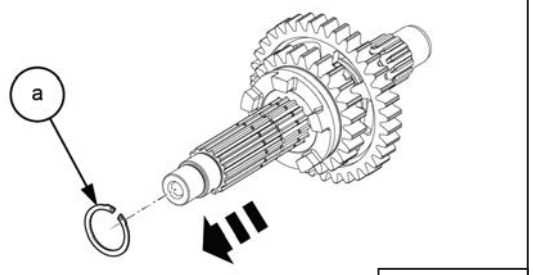

Fig. 5.3.200

	Circlip plier

- Remove the 6th driven gear **(a)** from drive shaft.

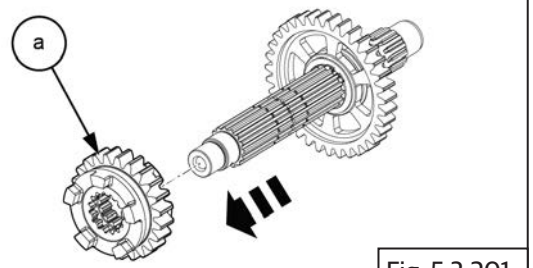

Fig. 5.3.201

- Remove the circlip **(a)** from drive shaft.

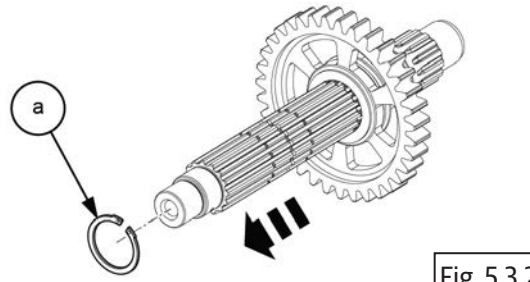

Fig. 5.3.202

	Circlip plier

- Remove the bush **(a)** and 2nd driven gear **(b)** from drive shaft **(c)**.

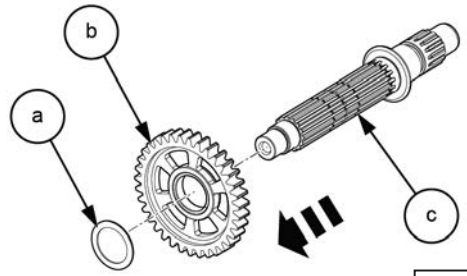

Fig. 5.3.203

ENGINE INSPECTION

CONTENTS PAGE

5.4 Engine Inspection.....132

5.4.1 Cylinder Head..... 132

5.4.2 Cylinder Barrel..... 134

5.4.3 Crankcase..... 136

5.4.4 Clutch Components..... 137

5.4.5 Shifter Forks..... 138

5.4.6 Selector Drum..... 138

5.4.7 Magneto Cover..... 138

5.4.8 Clutch Cover..... 139

Engine Inspection

NOTE
• *Remove off carbon deposits by scraping gently.* • *Use soft blunt objects to clean.* • *Wash components with recommended solvents.* • *Ensure area is clean and dry before inspection.*

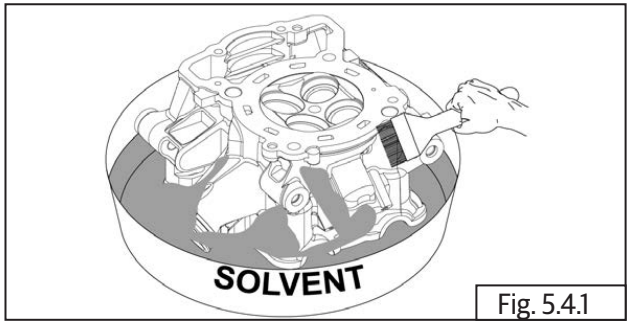

Fig. 5.4.1

5.4.1 Cylinder Head

Cylinder Head Inspection

- Inspect cylinder head carefully for any cracks, blow holes or damages – especially in the inlet and exhaust ports.
- Place thick straight edge across cylinder head gasket seating surface.
- Insert pointed feeler gauge of 0.01 mm thickness between straight edge and cylinder head.
- Inspect and ensure 4 locations **(a, b, c, d)** on cylinder head are at same level.

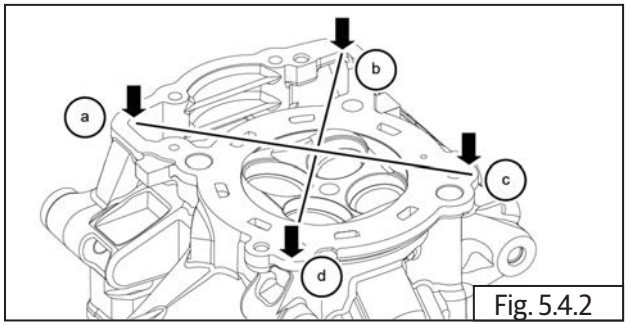

Fig. 5.4.2

- Ensure feeler enters properly at marked places.

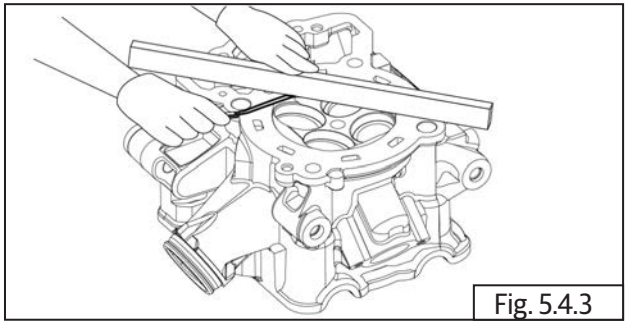
Fig. 5.4.3

	Thick straight edge and Feeler gauge

Service limit:	0.01 mm

Rocker Cover to Cylinder Head Seating Surface

- Place the thick straight edge across the rocker cover gasket seating surface.
- Insert pointed feeler gauge of 0.01 mm thickness between straight edge and cylinder head at the marked places.

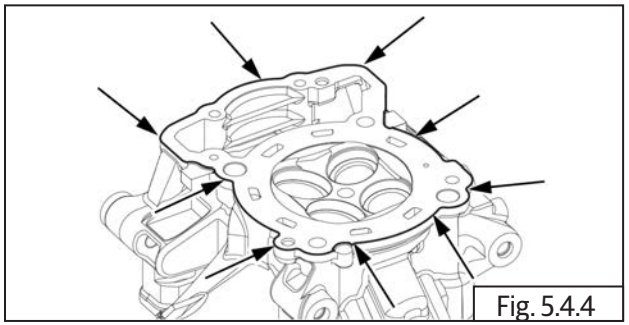
Fig. 5.4.4

Camshaft Run-out

- Inspect camshaft lobes for pitting, score marks, uneven wear or damage.
- Support the camshaft on the 2 V-blocks **(a)**.
- Rotate the camshaft slowly and measure run-out with a dial gauge **(b)** at the machined place.

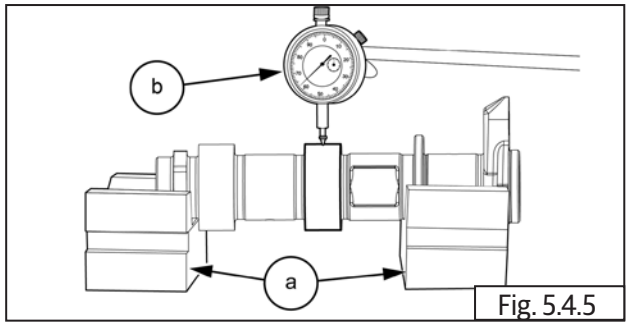

Fig. 5.4.5

	V-Blocks and Dial gauge

Service limit:	0.05 mm

Camshaft Journal OD

- Measure camshaft journal OD **(a)**.

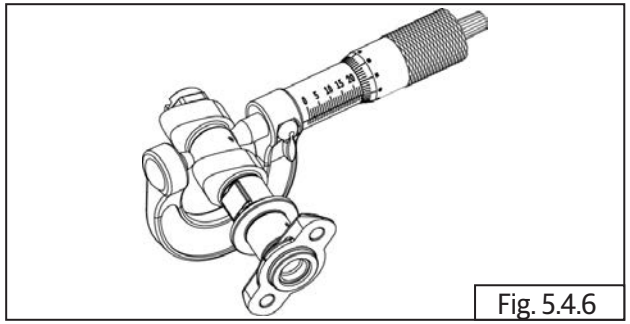
Fig. 5.4.6

	Micrometer

Service Limit:	21.930 mm

Camshaft Lobe

- Inspect cam lobes for scoring, wear-out and scratches.
- Measure height of each cam lobe **(a)**.

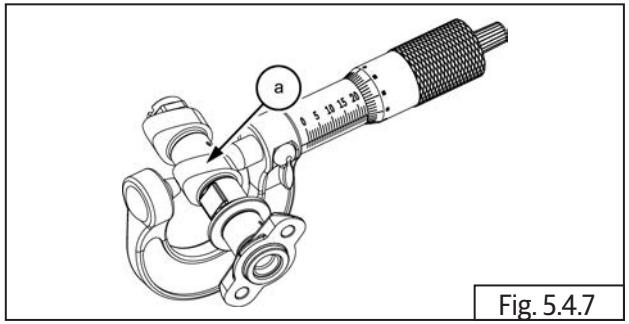

Fig. 5.4.7

	Micrometer

Service limit (Intake):	37.83 mm
Service limit (Exhaust):	36.80 mm

Valve Inspection.

- Check each valve for wear, burn or distortion at its face and stem end. Replace valve, if necessary.
- Check valve stem end face for pitting and wear.
- When it is worn out, replace the valve.

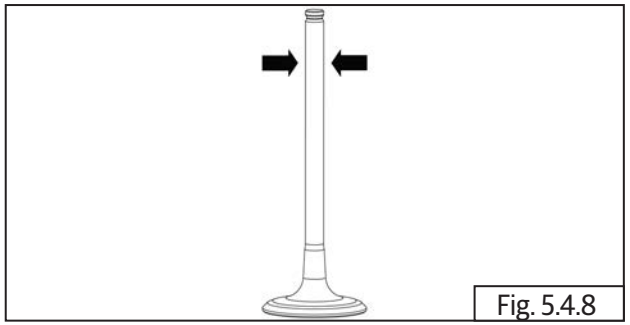
Fig. 5.4.8

Valve Guide ID (Inlet and Exhaust)

- Using micrometer and bore gauge, measure the ID of the valve guides at the top and bottom working area inside the guides.

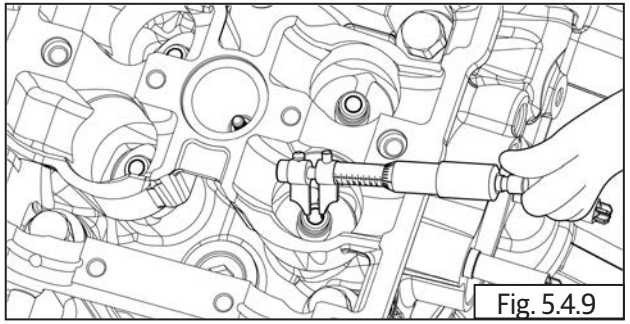
Fig. 5.4.9

	Micrometer and Bore gauge

Service Limit Intake	5.065 mm
Service Limit Exhaust:	5.100 mm

Valve Spring (Inlet and Exhaust)

- Measure load on installed and working condition.

Installed Load	
Minimum:	151 N
Maximum:	171 N

Working Load	
Minimum:	432.8 N
Maximum:	392 N

Valve Stem OD (Inlet and Exhaust Valve)

- Measure diameter at marked places along the length of each stem.

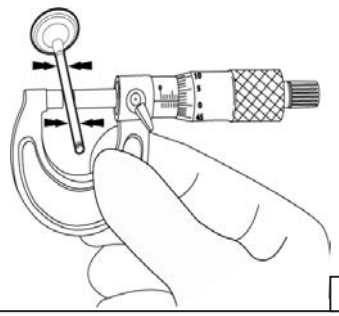

Fig. 5.4.10

	Micrometer

Inlet Valve Stem	
Measuring Point	**Service Limit**
Stem OD Top	4.960mm
Stem OD middle	4.960mm
Stem OD bottom	4.960mm
Bend	5.050 mm

Exhaust Valve Stem	
Measuring Point	**Service Limit**
Stem OD Top	4.940mm
Stem OD middle	4.940mm
Stem OD bottom	4.940mm
Bend	0.050mm

5.4.2 Cylinder Barrel

Cylinder Barrel Bore ID

- Check cylinder bore to piston working area for scoring, seizure marks and/or excessive wear.
- Measure the cylinder bore at the DTC (Top Dead Center)to BDC (Bottom Dead Center) at the rings working area using a bore gauge.
- Measure at both across and along the gudgeon pin axis.

Fig. 5.4.11

	Bore gauge

Part Name	Parameters	Spec (mm)		Proposed Service Limit (mm)
		Min	Max	
Barrel	Barrel ID (Top 0°) Barrel ID (Top 90°)	A: 83.985	A: 83.995	A Grade: Ø84.065
		B: 83.996	B: 84.006	B Grade: Ø84.076
		C: 84.007	C: 84.017	C Grade: Ø84.087

Piston OD

- Measure cylinder piston OD at the bottom window (8mm) where no coating area.

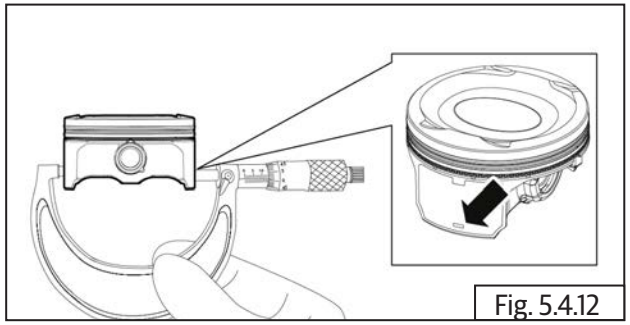

Fig. 5.4.12

	Micrometer

Part Name	Parameters	Spec(mm)		Proposed Service Limit(mm)
		Min	Max	
Piston	Piston OD @8mm	A: Ø83.960	A: Ø83.970	A Grade: Ø83.890
		B: Ø83.971	B: Ø83.981	B Grade: Ø83.901
		C: Ø83.982	C: Ø83.992	C Grade: Ø83.912

Piston Pin Bore ID

- Measure both LH and RH cylinder piston pin bore **(a)** inner diameter using inside micrometer **(b)**.

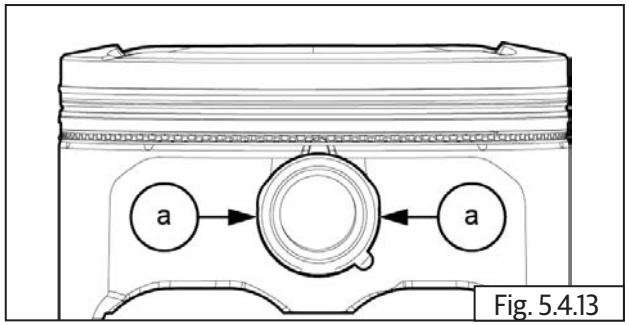

Fig. 5.4.13

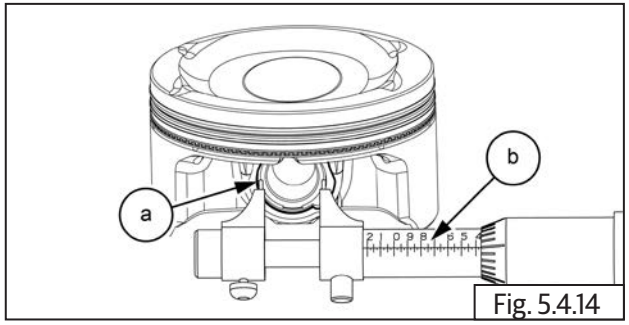

Fig. 5.4.14

	Inside micrometer

Part Name	Parameters	Spec(mm)		Proposed Service Limit(mm)
		Min	Max	
Piston	Pin Bore ID	20.007	20.013	20.026

Piston Pin

- Measure the diameter of the piston pin **(a)**.

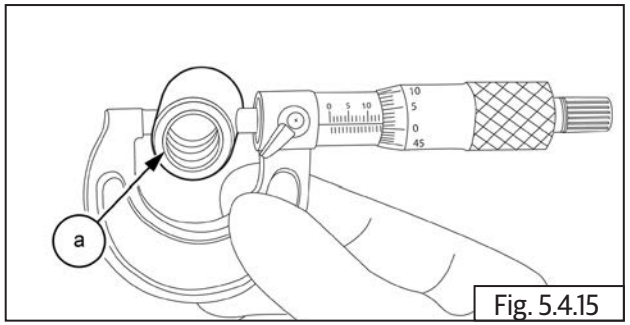

Fig. 5.4.15

	Micrometer

Part Name	Parameters	Spec(mm)		Proposed Service Limit(mm)
		Min	Max	
Piston Pin	Piston Pin OD	19.994	20	19.979

Piston Ring End Gap

- Position the piston rings at their respective locations at the top of the cylinder barrel (TDC) and ensure they are seated "squarely" inside the cylinder barrel.

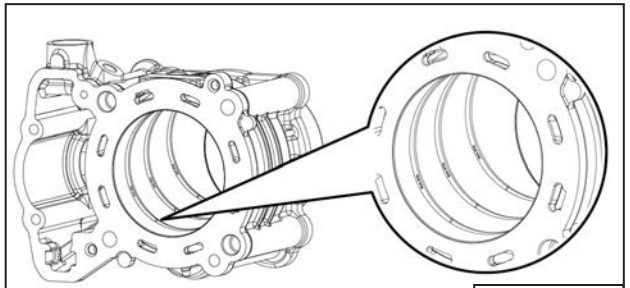

Fig. 5.4.16

- Measure piston rings end gap **(a)** using feeler gauge **(b)**.

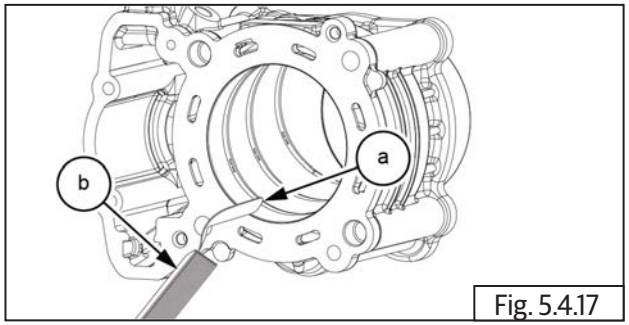

Fig. 5.4.17

	Feeler gauge

Part Name	Parameters	Spec (mm)		Proposed Service Limit (mm)
		Min	Max	
Top Ring	End Gap	0.15	0.25	0.55
Mid Ring		0.5	0.7	1

5.4.3 Crankcase

Connecting Rod Small End ID

- Measure the connecting rod small end inner diameter **(a)**.

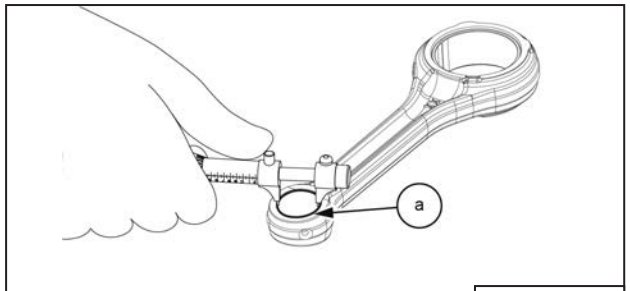

Fig. 5.4.18

	Inside Micrometer

Part Name	Parameters	Spec (mm)		Proposed Service Limit (mm)
		Min	Max	
Connecting Rod	Small End Bore	20.026	20.034	20.064

Water pump shaft Runout

- Place the balancer with water pump shaft on V-blocks .
- Rotate the balancer **(a)** and measure water pump shaft run-out with a dial gauge at the machined surface.

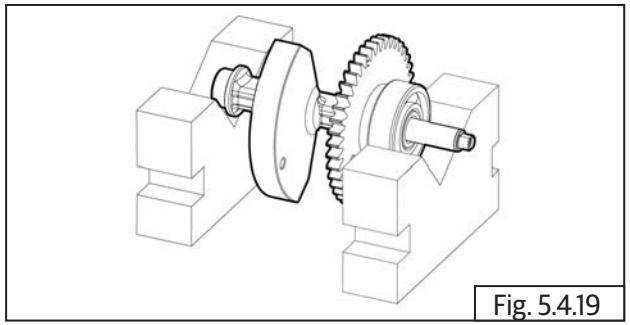
Fig. 5.4.19

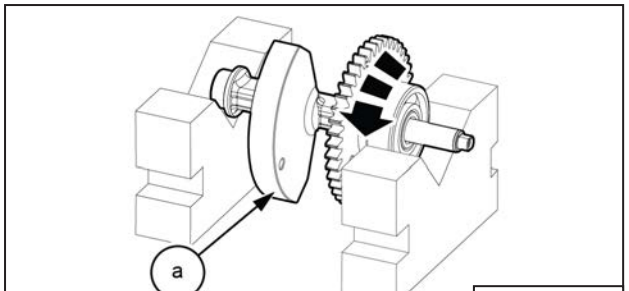

Fig. 5.4.20

	V-Blocks and Dial gauge.

Part Name	Parameters	Spec (mm)		Proposed Service Limit (mm)
		Min	Max	
Balancer shaft	Water pump shaft Runout	0	0.1	0.15

5.4.4 Clutch Components

Friction plate

- Inspect the clutch plates visually for uneven wear, seizure and discoloration.
- Measure the thickness of the friction plate **(a)** at 4 locations marked by arrows.

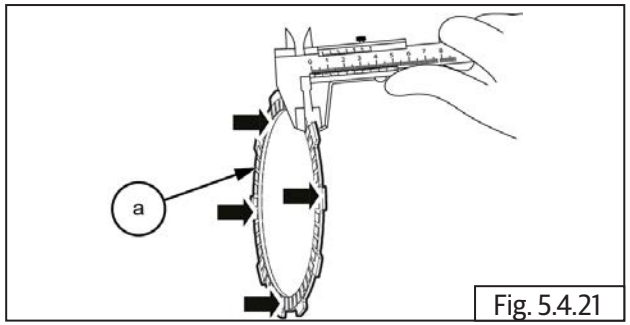

Fig. 5.4.21

	Vernier caliper

Part Name	Parameters	Spec (mm)		Proposed Service Limit (mm)
		Min	Max	
Clutch	Friction Plate thickness	2.9	3.1	2.8

Steel Plate

- Measure the thickness of the steel plates **(a)** at different locations.

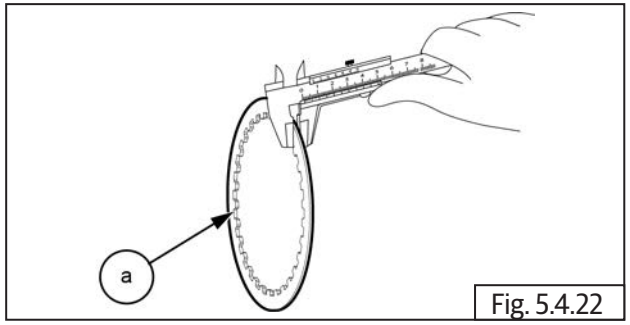

Fig. 5.4.22

Part Name	Parameters	Spec (mm)		Proposed Service Limit (mm)
		Min	Max	
Clutch	Steel plate thickness	1.85	2.15	1.8

	Vernier caliper

Clutch Spring

- Check free length of clutch spring.

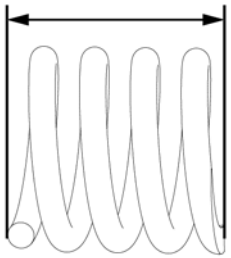
Fig. 5.4.23

	Vernier caliper

Part Name	Parameters	Spec (mm)		Proposed Service Limit (mm)
		Min	Max	
Clutch	Spring free height	44.86	44.86	42.9

Clutch Hub (Outer and Inner)

- Inspect the clutch hub **(a)** for any scratches, wear or damage of the lugs.

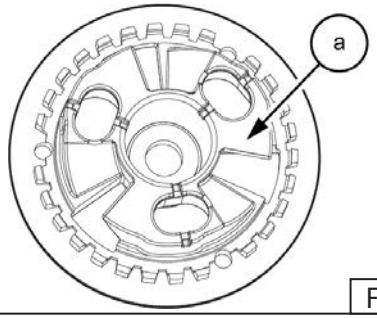

Fig. 5.4.24

- Visually inspect clutch center **(a)** for any scratches, wear or damage.

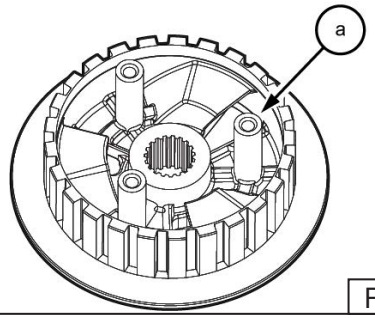

Fig. 5.4.25

Clutch Housing

- Visually inspect clutch housing and lugs for any, wear, bends, lug breakage, heat marks or damages.

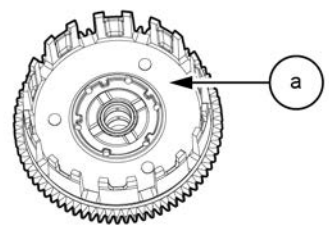

Fig. 5.4.26

5.4.5 Shifter Forks

- Measure the pegs on shifter forks **(a)** using micrometer for wear.

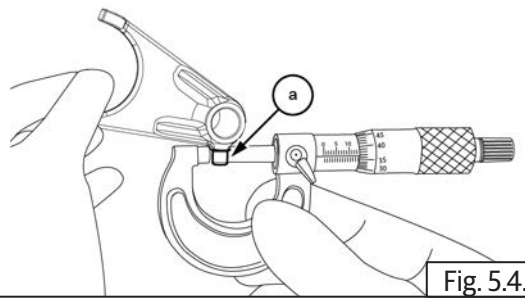

Fig. 5.4.27

	Micrometer

Part Name	Parameters	Spec (mm)		Proposed Service Limit (mm)
		Min	Max	
Fork	Pin OD	5.9	5.95	5.8

- Visually inspect the shifter fork machined lugs **(a)** for damage, excessive wear out scoring and replace if damaged.

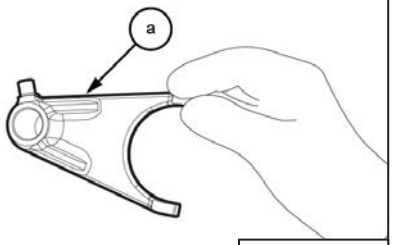

Fig. 5.4.28

5.4.6 Selector Drum

- Inspect the shifter fork working grooves in the selector drum for any damages, chipped ends etc. Measure the grooves in their working area for excessive wear out.

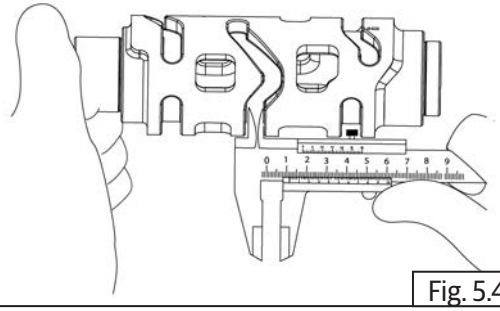

Fig. 5.4.29

	Vernier caliper

Part Name	Parameters	Spec (mm)		Proposed Service Limit (mm)
		Min	Max	
Cam Drum	Groove Width	6.05	6.2	6.35

5.4.7 Magneto Cover

- Visually inspect the magneto cover for any outer damages, cracks etc.
- Inspect the cover seating area for any damages pitting etc.
- Place the magneto cover **(a)** on a surface plate and measure for any surface warpage using feeler strip **(b)** of 0.01 mm.
- Replace cover if warpage is beyond service limit.

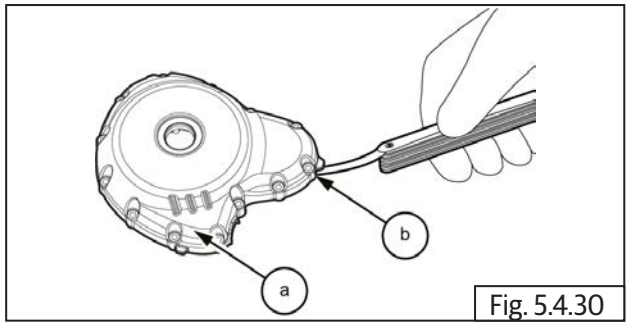

Fig. 5.4.30

	Feeler gauge and Surface plate

Part Name	Parameters	Spec (mm)		Proposed Service Limit (mm)
		Min	Max	
ACG Cover	Flatness	0	0.05	0.06

5.4.8 Clutch Cover

- Visually inspect the clutch cover for any outer damages, cracks etc.
- Inspect the cover seating area for any damages pitting etc.
- Place the clutch cover **(a)** on a surface plate and measure for any surface warpage using feeler strip **(b)** of 0.01 mm.
- Replace cover if warpage is beyond service limit.

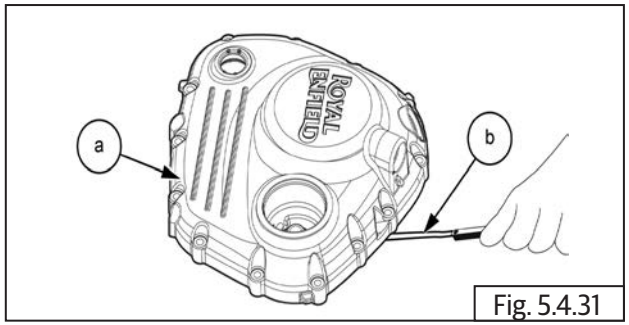

Fig. 5.4.31

	Feeler gauge and Surface plate

Part Name	Parameters	Spec (mm)		Proposed Service Limit (mm)
		Min	Max	
Clutch Cover	Flatness	0	0.05	0.06

Engine Assembly Procedure

CONTENTS PAGE

5.5.1 Countershaft Assembly Sequence 170
5.5.2 Countershaft Components 170
5.5.3 Drive shaft Assembly Sequence 173
5.5.4 Drive shaft Components 173
5.5.5 LH Crankcase 176
5.5.6 Gear Assembly 177
5.5.7 Crankshaft And Mass Balancer 178
5.5.8 RH Crankcase 179
5.5.9 Gear Shifter Shaft Installation 180
5.5.10 oil Pump assembly 182
5.5.11 Primary Drive Gear assembly 184
5.5.12 Clutch assembly 184
5.5.13 Pistons Rings 188
5.5.14 Piston Assembly 189
5.5.14.a Piston pin first circlip assembly 189
5.5.14.b Piston pin second circlip assembly 191
5.5.15 Cylinder Head Valve Assembling 192
5.5.16 Cylinder Head & Noise Suppressor Assembling 193
5.5.17 Cam Ladder And Camshaft Assembling 196
5.5.18 Cam Timing Procedure 196
5.5.19 Water Pump assembly 203
5.5.20 Cylinder Head Cam Cover Assembling 203
5.5.21 Magneto Assembly & Idler Gear installation 205
5.5.22 Magneto Stator Assembly 207
5.5.23 LH Cover Assembly 207
5.5.24 Oil Inspection Window Assembling 209
5.5.25 Clutch Shifter shaft Assembling 209
5.5.26 RH Side Cover Assembling 210
5.5.27 Oil Filter Assembling 211
5.5.28 Starter Motor Assembling 212
5.5.29 Gear Position Sensor (GPS) Assembling 212
5.5.30 Injector Assembling 213
5.5.31 Oil Pressure Switch Assembling 214
5.5.32 Coolant Temperature Sensor Assembling 214
5.5.33 Thermostat Assembling 214
5.5.34 Manifold clamp Assembling 215
5.5.35 Oil Strainer Assembling 215
5.5.36 Spark Plug Assembling 216

5.5.1 Countershaft Assembly Sequence

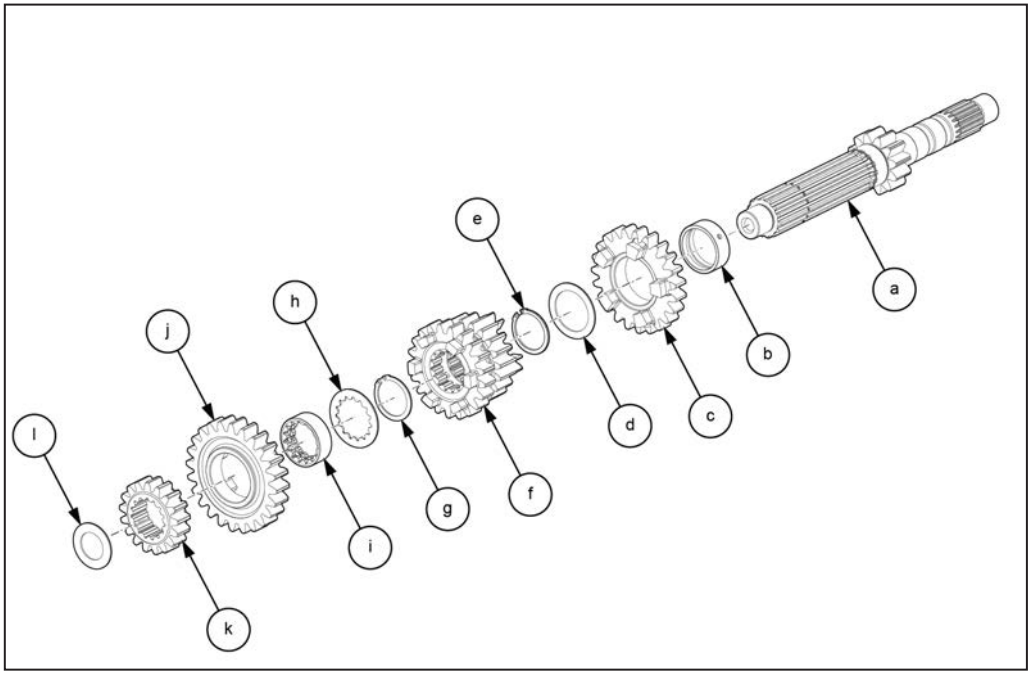

Item No.	Description	Quantity	Item No.	Description	Quantity
a	Shaft,counter (input) 1st gear	1	g	Circlip	1
b	Bush,5th drive gear	1	h	Washer-3rd & 4th driven gear	1
c	Gear,5th drive	1	i	Splined bush - 6th drive gear	1
d	Thrust washer	1	j	6th drive gear	1
e	Circlip	1	k	2nd drive gear	1
f	Gear,3rd & 4th drive	1	l	Thrust washer	1

5.5.2 Countershaft Components:

NOTE
• *Bush inner surface should freely slide on the shaft.* • *Gear inner surface should freely rotate on bush outer surface.* • *Gear inner spline should freely enter onto the shaft.* • *Ensure proper seating of circlips after assembly.*

- Assembly the bush **(a)** 5th drive gear **(b)** and thrust washer **(c)** on counter shaft.

NOTE
• *Lubricate 5th drive gear and bush inner diameter.*

	GL80W90

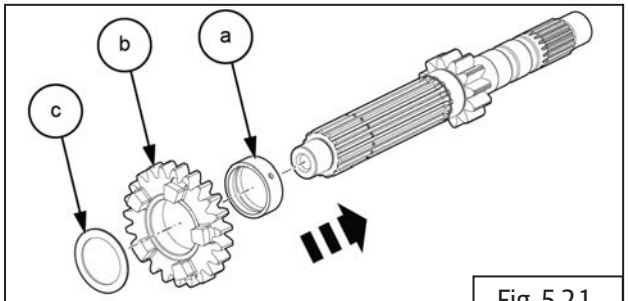

Fig. 5.2.1

NOTE
• *Ensure bush is fully seated against in* counter shaft. • *Ensure gear is fully seated on splined bush.*

- Assembly the circlip **(a)** on groove on countershaft and ensure it is seated properly in the groove near 5th drive gear.

NOTE
• *Gently rotate circlip without expanding to ensure it is properly seated in groove in countershaft.*

NOTE
• *Do not reuse the circlip, Renew all circlips.*

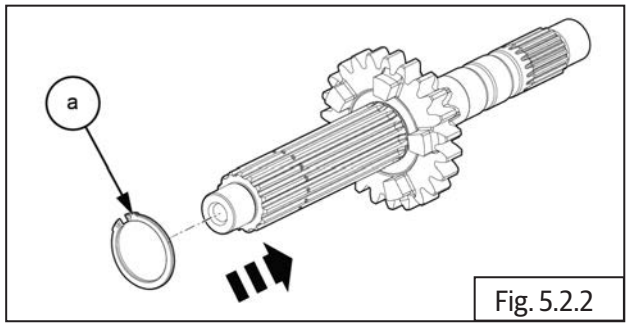

Fig. 5.2.2

	Circlip plier

- Assembly the 3rd & 4th Drive gear **(a)** on countershaft.

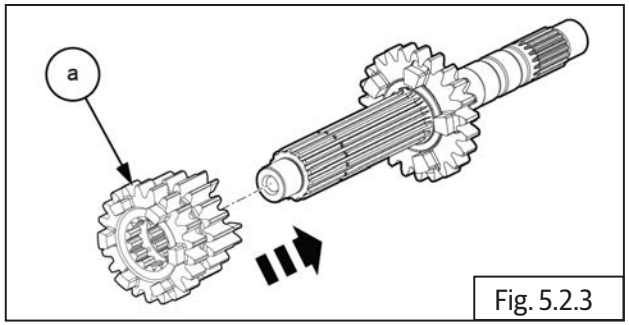

Fig. 5.2.3

- Assembly the 2nd circlip **(a)** on countershaft and ensure it is seated properly in the groove.

NOTE
• *Gently rotate circlip without expanding to ensure it is properly seated in groove in countershaft.*

NOTE
• *Do not reuse the circlip, Renew all circlips.*

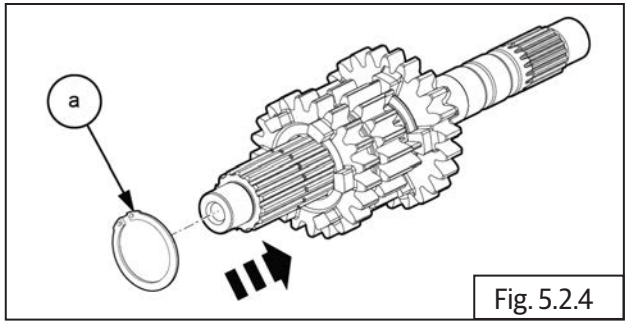

Fig. 5.2.4

	Circlip plier

- Assembly thrust washer **(a)** on countershaft and ensure it is seated properly against circlip.

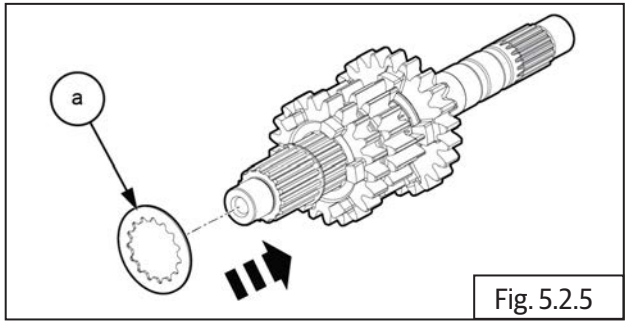

Fig. 5.2.5

- Ensure oil hole in splined bush **(a)** is aligned with oil hole in counter shaft and assemble splined bush.

NOTE
• *Lubricate the* splined bush *Outer diameter.*

	GL80W90

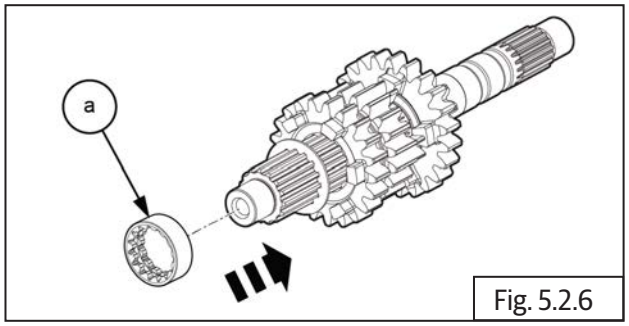

Fig. 5.2.6

NOTE
• *Ensure bush is fully seated against* thrust washer *in countershaft.*

- Assembly the 6th drive gear **(a)** on countershaft.

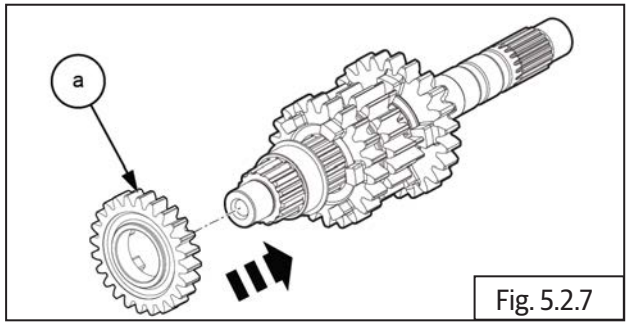

Fig. 5.2.7

NOTE
• *Lubricate the* 6th drive gear *inner diameter.*

	GL80W90

NOTE
• *Ensure gear is fully seated on splined bush.*

- Assembly the 2nd drive gear **(a)** on countershaft.

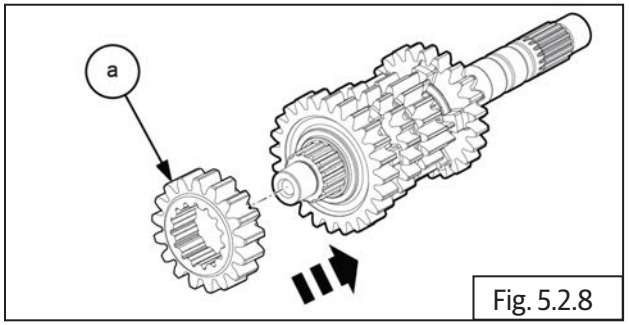

Fig. 5.2.8

- Assembly the 2nd drive gear thrust Washer **(a)** on counter shaft and ensure it is seated properly against 2nd drive gear.

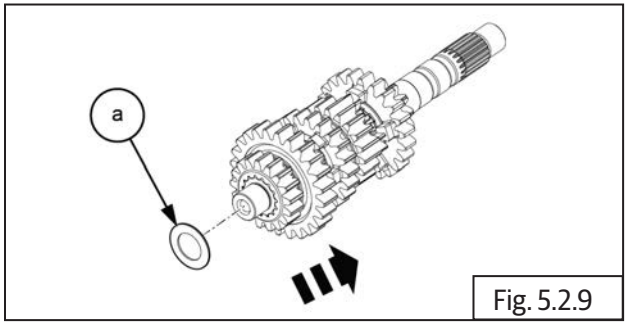

Fig. 5.2.9

5.5.3 Drive shaft Assembly Sequence

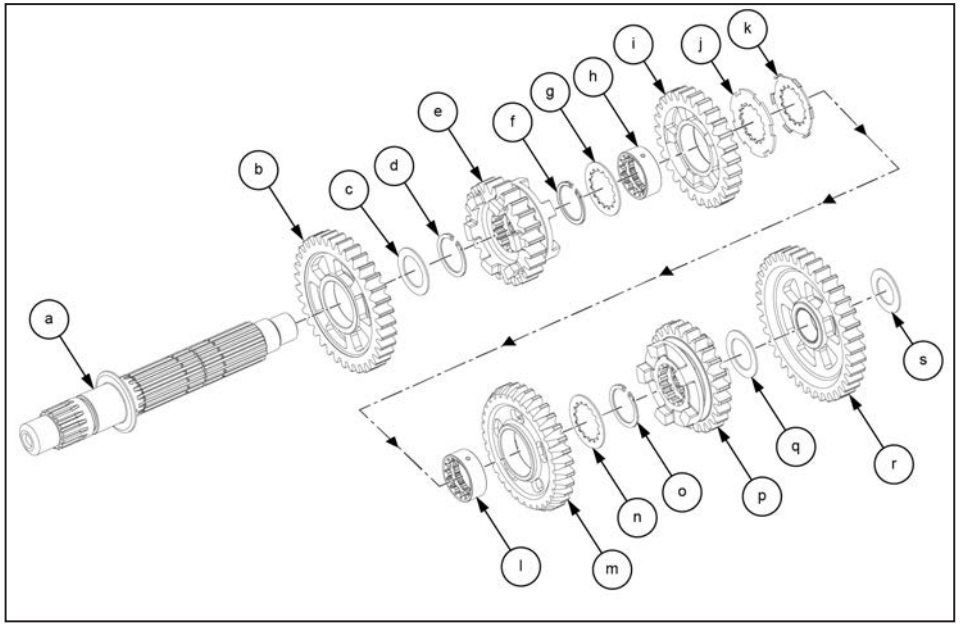

Item No.	Description	Quantity	Item No.	Description	Quantity
a	Drive shaft (out put)	1	k	Thrust Washer Lock	1
b	2nd Driven Gear Comp	1	l	Splined bush	1
c	Washer	1	m	3rd Driven Gear	1
d	Circlip	1	n	Washer 3rd & 4th Driven Gear	1
e	6th Driven Gear	1	o	Circlip	1
f	Circlip	1	p	5th Driven Gear	1
g	Washer 3rd & 4th Driven Gear	2	q	Washer	1
h	Splined bush	2	r	1st Driven Gear	1
i	4th Driven Gear	1	s	Washer	1
j	Thrust Washer	1			

5.5.4 Drive shaft Components:

NOTE

- **Do not** *reuse thrust washers, circlips, collar bush. Always replace with new parts.*
- *Ensure all components are cleaned and lubricated with recommended lubricants before assembly.*
- *The drive shaft gears can be recognized by size: the gear with the smallest diameter is 6th gear, and the one with largest is 1st gear. Ensure that all parts are put back in correct sequence and all circlips and washers are incorporated in correct places.*

- Assembly the washer **(a)** and 2nd driven gear comp **(b)** on drive shaft **(c)**.

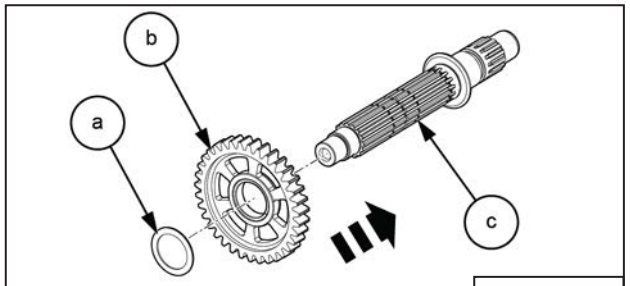

Fig. 5.2.1

- Assembly the circlip **(a)** on groove in drive shaft
- and ensure it is seated properly in the groove near 2nd driven gear.
- Gently rotate circlip without expanding to ensure it is properly seated.

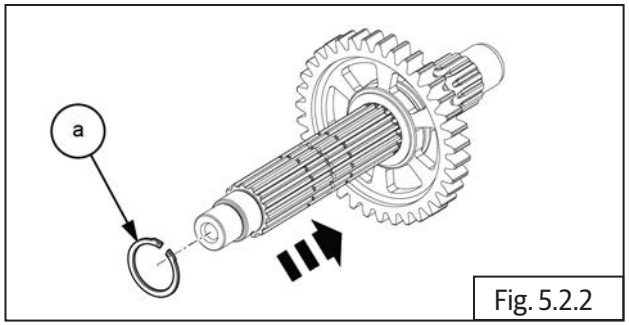

Fig. 5.2.2

NOTE
• *Do not reuse the circlip, Renew all circlips.*

NOTE
• *Do not reuse the circlip, Renew all circlips.*

	Circlip plier

NOTE
• *Ensure proper seating of circlip after assembly.*

- Assembly the 6th driven gear **(a)** on drive shaft.

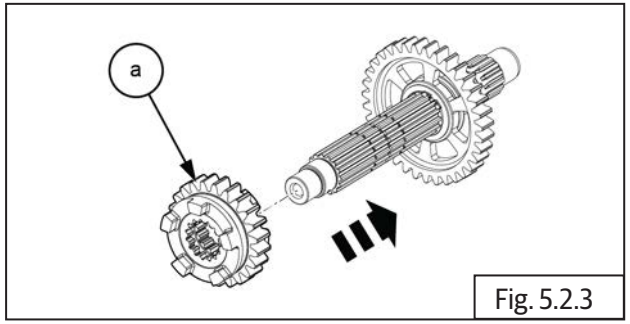

Fig. 5.2.3

NOTE
• *Spline should enter freely onto the shaft.*

- Install the circlip **(a)** on the 6th gear.

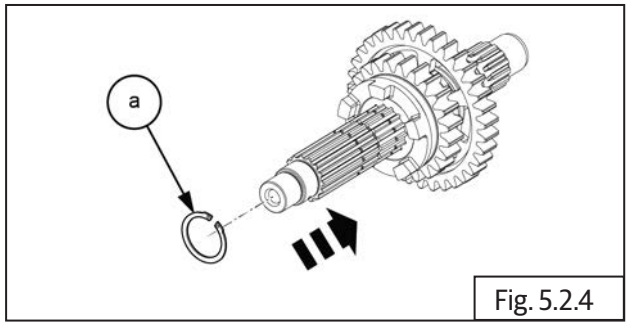

Fig. 5.2.4

NOTE
• *Do not reuse the circlip, Renew all circlips.*

	Circlip plier

NOTE
• *Ensure proper seating of circlip after assembly.*

- Assembly thrust washer **(a)** on drive shaft and ensure it is seated properly against circlip.

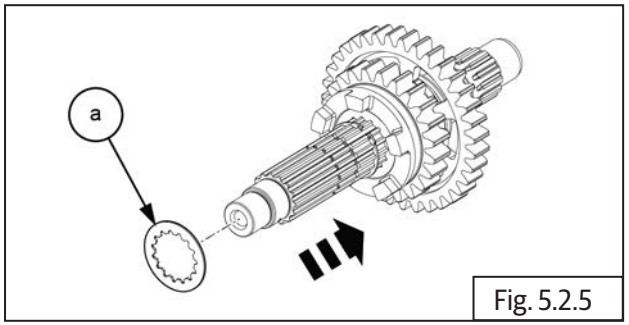

Fig. 5.2.5

NOTE
• *Spline should enter freely onto the shaft.*

- Ensure oil hole in 1st splined bush **(a)** is aligned with oil hole in drive shaft and assemble splined bush on drive shaft.

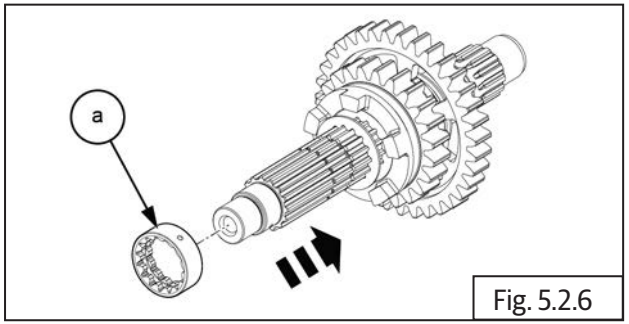

Fig. 5.2.6

NOTE
• *Spline should enter freely onto the shaft* • *Ensure bush is fully seated against thrust washer in drive shaft.*

- Assembly the 4th driven gear **(a)** on drive shaft.

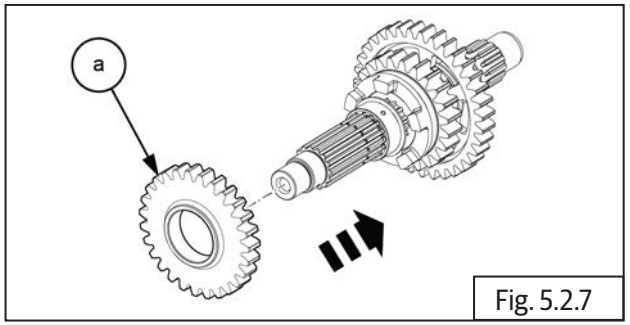

Fig. 5.2.7

- Assembly thrust washer **(a)** on drive shaft and ensure it is seated properly against 3rd driven gear.

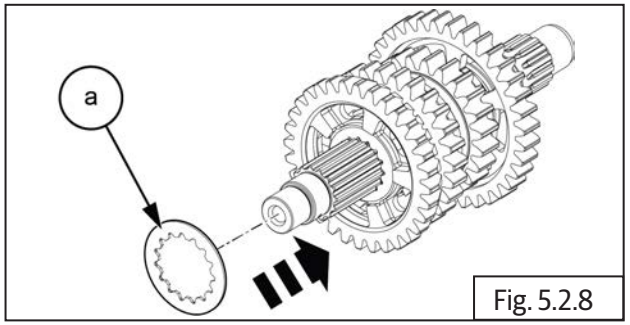

Fig. 5.2.8

NOTE
• *Gently rotate circlip without expanding to ensure it is properly seated in groove in drive shaft.* • *Gear inner surface should freely rotate on bush outer surface*

- Assembly the 3rd circlip **(a)** on drive shaft and ensure it is seated properly in the groove.

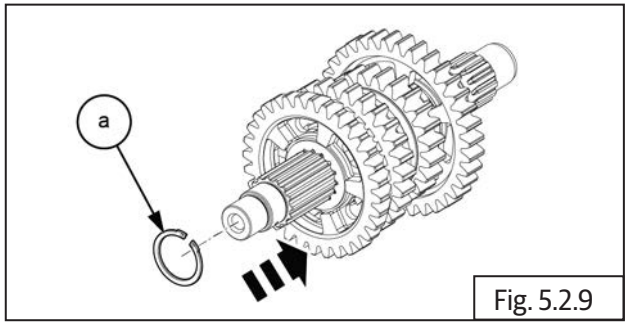

Fig. 5.2.9

NOTE
• *Do not reuse the circlip, Renew all circlips.*

NOTE
• *Ensure proper seating of circlip after assembly.*

	Circlip plier

- Assembly the 5th driven gear **(a)** on drive shaft.

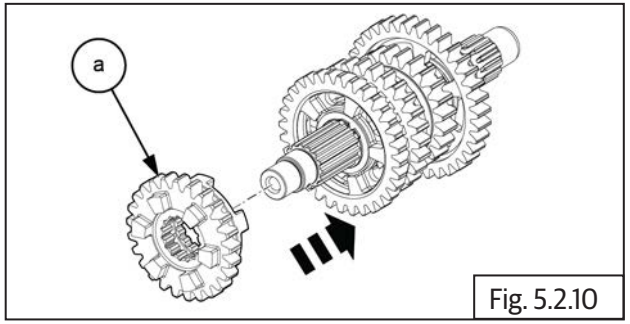

Fig. 5.2.10

NOTE
• *Spline should enter freely onto the shaft.*

- Assembly the 1st driven gear **(b)** along with thrust washer **(a)** on drive shaft.

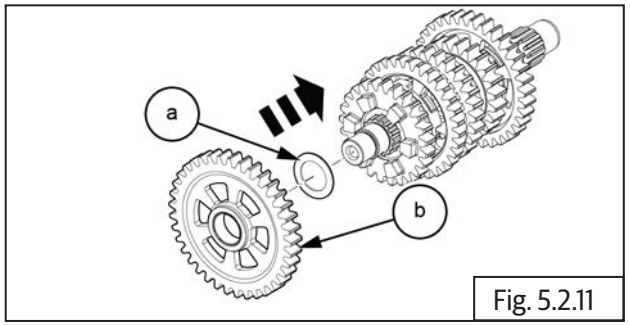

Fig. 5.2.11

NOTE

- *Ensure gear is fully seated on splined bush.*
- *Bush inner surface should freely slide on the shaft.*
- *Gear inner surface should freely rotate on bush outer surface*

- Insert thrust lock washer **(a)** with internal and external splines on drive shaft and align internal splines with groove in drive shaft.
- Rotate lock washer such that the washer locks in place on drive shaft and cannot come out.

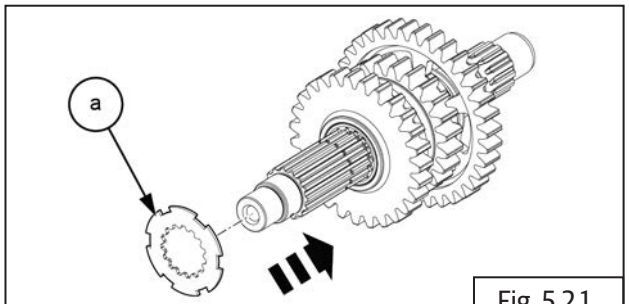

Fig. 5.2.1

NOTE

- *Thrust washer spline should enter freely onto shaft.*
- *Ensure bush is fully seated against* splined lock washer *in drive shaft.*

- Assemble splined lock washer **(a)** on drive shaft such that the outside tabs are facing the lock washer on drive shaft.
- Ensure outer tabs of lock washer are aligned and fully seated in outer splines of lock washer

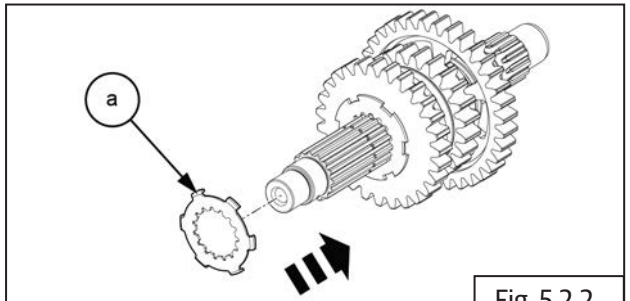

Fig. 5.2.2

NOTE

- *Thrust washer lock spline should enter freely onto shaft and lug to be matched with washer groove.*

- Ensure oil hole in 2nd splined bush **(a)** is aligned with oil hole in drive shaft and assemble splined bush on drive shaft.

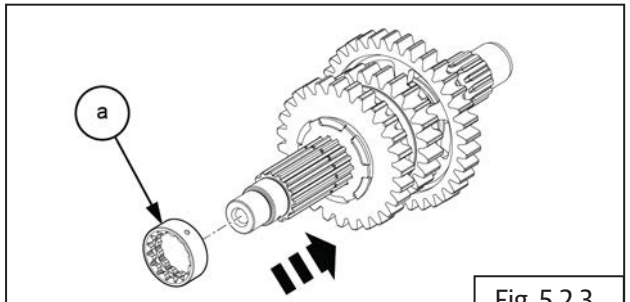

Fig. 5.2.3

NOTE

- *Spline should enter freely onto the shaft.*
- *Ensure bush is fully seated against* splined lock washer *in drive shaft.*

- Assembly the 3rd driven gear **(a)** on drive shaft.

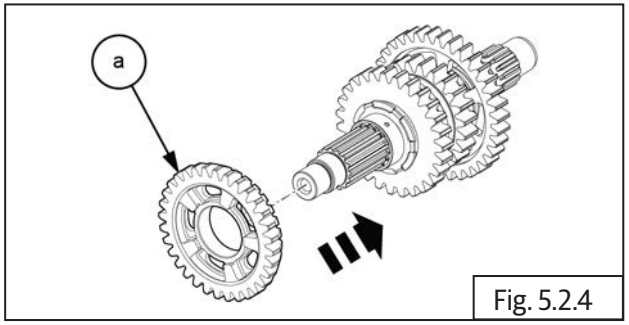

Fig. 5.2.4

NOTE

- *Ensure gear is fully seated on splined bush.*
- *Gear inner surface should freely rotate on bush outer surface*

NOTE
• *Bush inner surface should freely slide on the shaft.*

- Assembly thrust washer **(a)** on drive shaft and ensure it is seated properly against 1st driven gear.

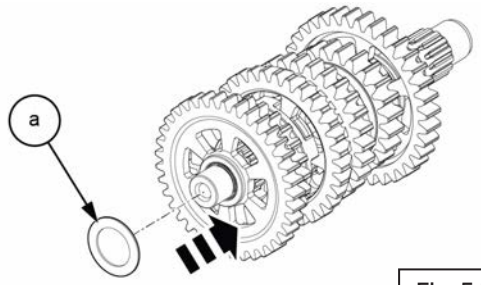

Fig. 5.2.12

5.5.5 LH Crankcase:

- Insert the 1 No dowel pin **(a)** into crankcase LH.

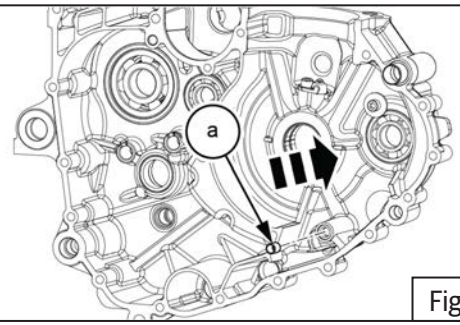

Fig. 5.2.13

- Install the 2 Nos. O-rings **(a)** into crankcase LH.

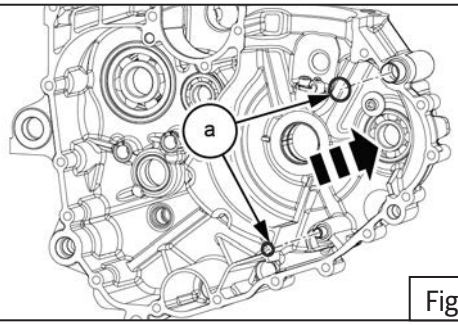

Fig. 5.2.14

NOTE
• **Do not reuse the "O" Rings, Renew all "O" Rings.**

5.5.6 Gear Assembly

- Install the gear box assembly **(a)** into crankcase LH.

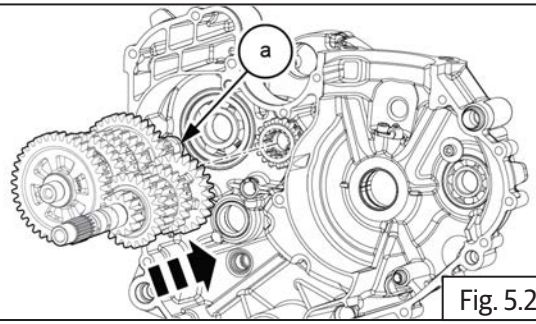

Fig. 5.2.15

NOTE
• *Lubricate the* all gears.

	GL80W90

- Install the shifter drum **(a)** into crankcase LH.

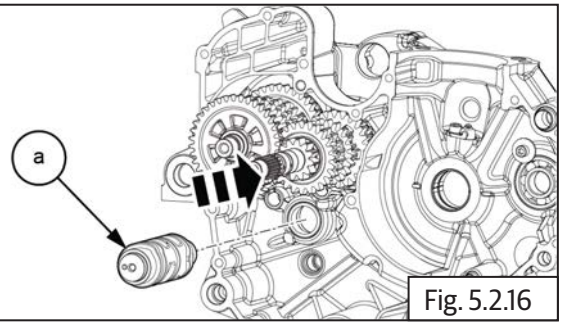

Fig. 5.2.16

- Install the gear shifter fork **(a)** 2 Nos. into drive shaft.

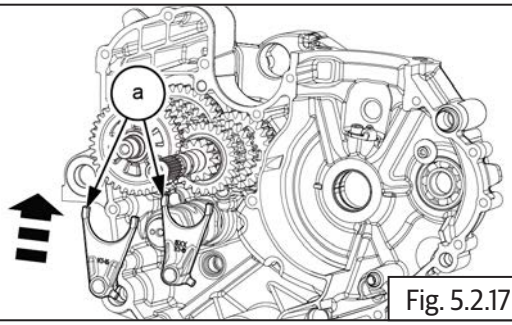

Fig. 5.2.17

NOTE
• *Lubricate the* selected fork and shaft before assemble.

	GL80W90

- Install the gear shifter shaft **(a)** into drive shaft.

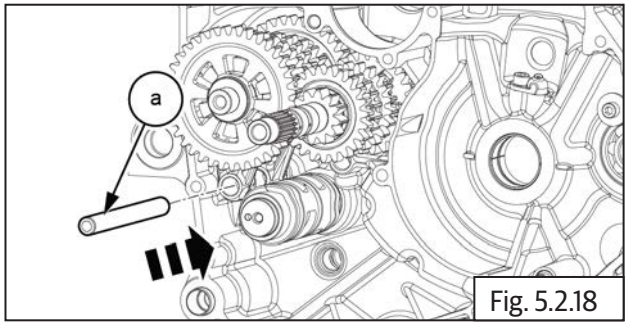

Fig. 5.2.18

- Install the gear shifter fork **(a)** 1 No. into counter shaft.

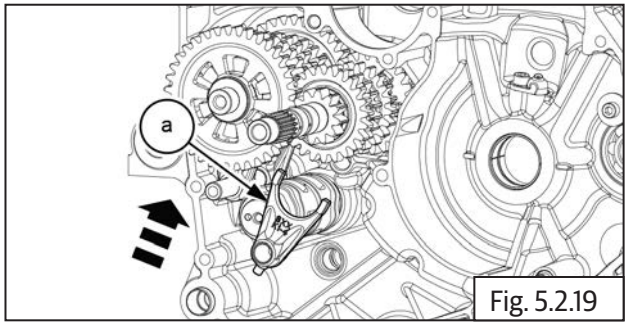

Fig. 5.2.19

- Install the gear shifter shaft **(a)** into counter shaft.

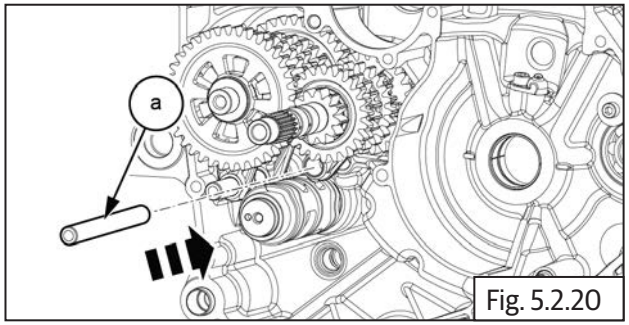

Fig. 5.2.20

5.5.7 Crankshaft And Mass Balancer

NOTE
• *Lubricate the* crankshaft and balancer before assemble..

	GL80W90

- Locate the crankshaft assembly **(a)** into crankcase.

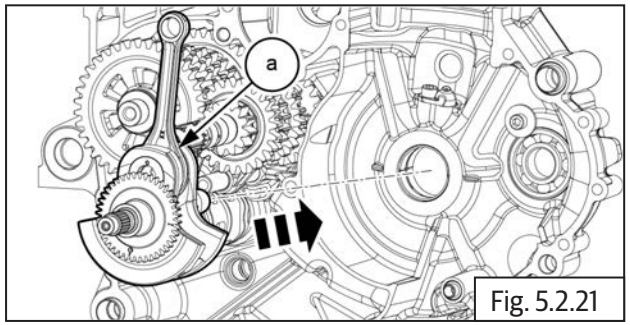

Fig. 5.2.21

- Rotate the crankshaft assembly anticlockwise.

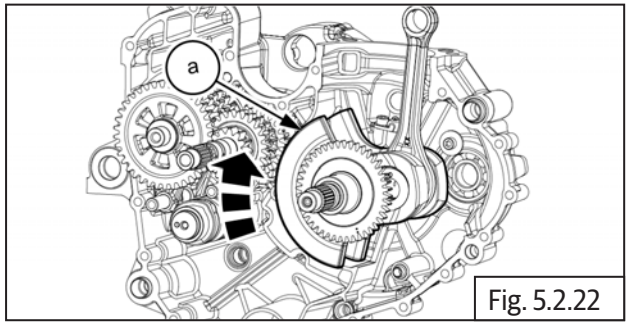

Fig. 5.2.22

- Locate the mass balancer **(a)** into crankcase.

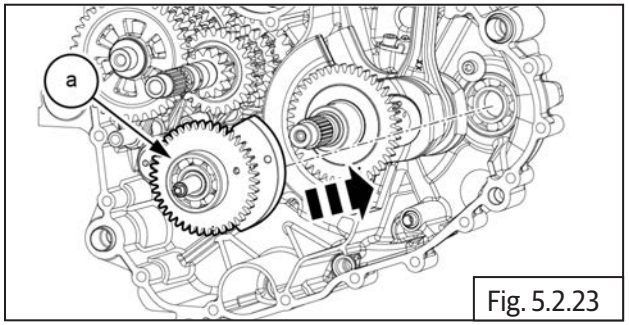

Fig. 5.2.23

- Rotate and ensure the crankshaft assembly **(a)** and mass balancer **(b)** it is seated properly in crankcase.

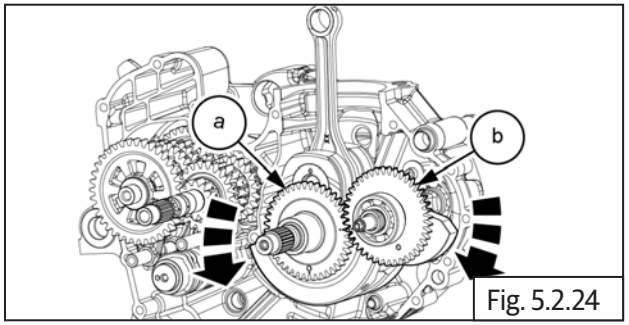

Fig. 5.2.24

NOTE
• *Make sure the three punch marks on the crankshaft and balancer shaft line up during assembly.*

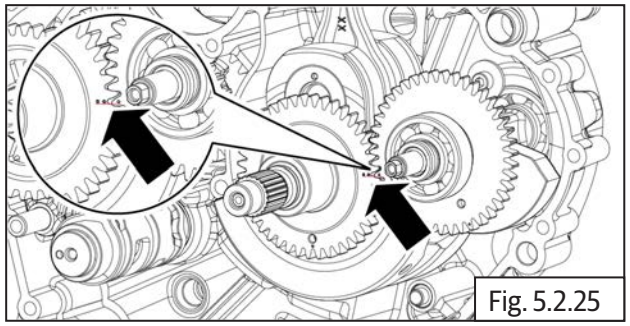

Fig. 5.2.25

5.5.8 RH Crankcase

- Apply Threebond Super Cleaner on the crankcase surface and wipe it using a lint-free cloth.
- Use Threebond 1217H sealant with a bead diameter of 1.5 +0.5mm. Please refer to the image provided for more details.

NOTE
• *Before closing the crankcase box, ensure there is no excess sealant on the crankcase surface..*

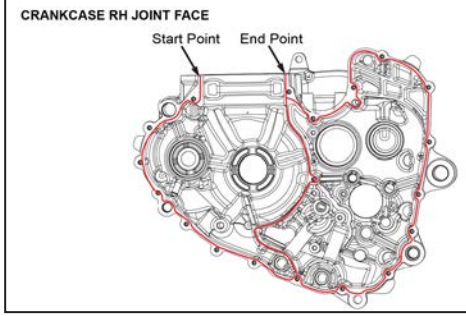

Fig. 5.2.26

- Apply recommended sealant on gasket evenly, on the upper crankcase mating surface **(a)**.

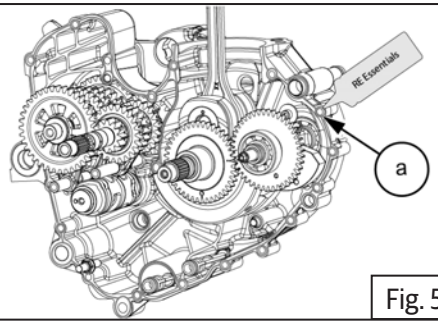

Fig. 5.2.27

	Threebond 1217H 2.Sealant

- Assemble the RH crankcase **(a)** and ensure proper fitment.

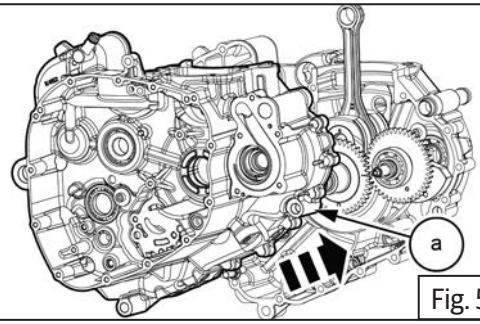

Fig. 5.2.28

- Locate 4 Nos. Hex socket screws **(M6) (a)** in RH crankcase cover and hand tighten just sufficiently **Do not TIGHTEN FULLY**.

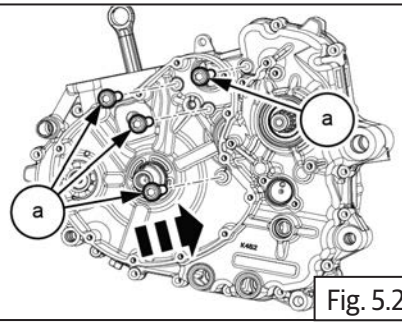

Fig. 5.2.29

	5 mm Allen key with Ratchet

- Locate 15 Nos. Hex socket screws **(M6) (a)** in RH crankcase cover and hand tighten just sufficiently **Do not TIGHTEN FULLY**.

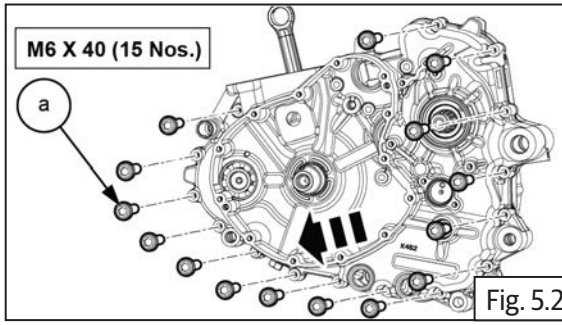

Fig. 5.2.30

	5 mm Allen key with Ratchet

- Locate 4 Nos. Hex socket screws **(M6) (a)** in RH crankcase cover and hand tighten just sufficiently **Do not TIGHTEN FULLY**.

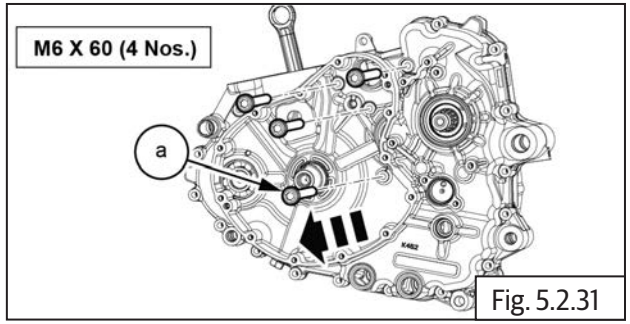

Fig. 5.2.31

	5 mm Allen key with Ratchet

- Tighten the 19 Nos. Hex flange bolts , as mentioned in the sequence below,

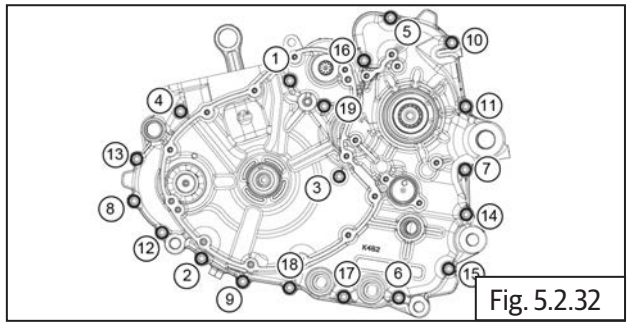

Fig. 5.2.32

	5mm Allen key with ratchet
Torque	10 - 12 Nm / 1.0 - 1.2 kgf-m

- Connect the special tool **(a)** from connecting rod **(b)**.

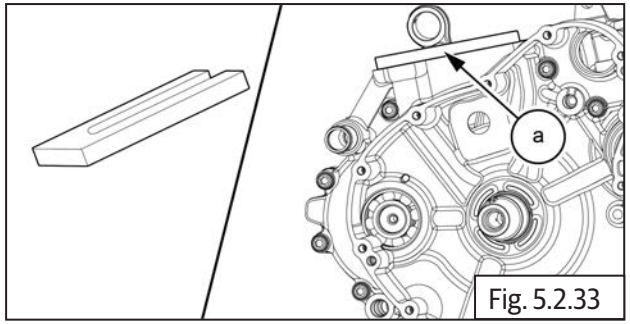

Fig. 5.2.33

SPL	Part No: ST-27529-2
	Part Name: Connecting rod holder

- Locate and tighten 1 No. Hex flange head bolt **(M6) (a)** along with washer **(b)** on balancer shaft assembly.

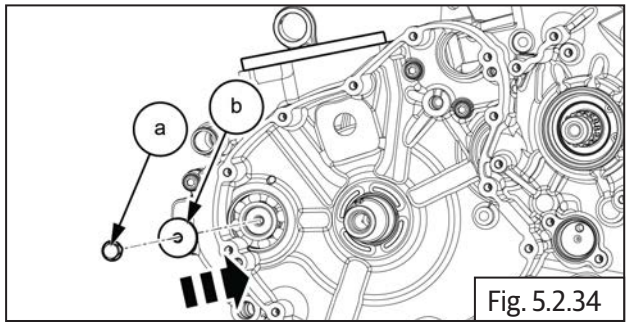

Fig. 5.2.34

	Loctite 243

	10mm Socket with ratchet
Torque	11 N-m / 1.1kgf-m

5.5.9 Gear Shifter Shaft Installation:

- Install the oil seal **(a)** into LH crankcase.

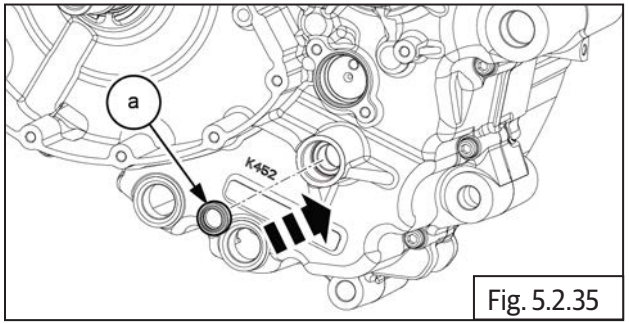

Fig. 5.2.35

- Use special tool **(a)** to install the oil seal.

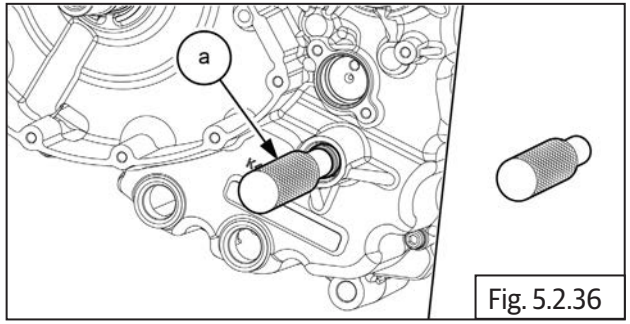

Fig. 5.2.36

SPL	Part No: ST30270/a
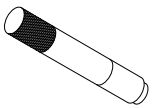	Part Name: Gear Shifter seal installer

NOTE
• **Oil seal should be used one time only. Do not reuse**.

- Locate the star index **(a)** into shifter drum dowel pin.

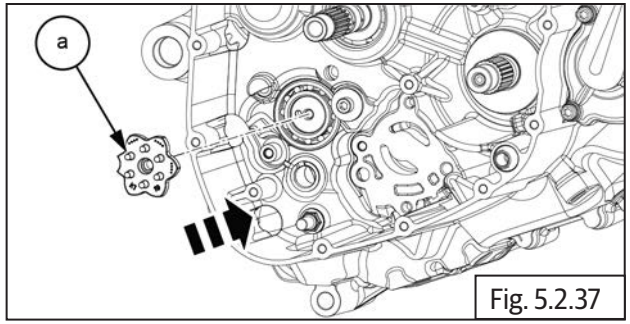

Fig. 5.2.37

- Locate and tighten 1 No Hex flange head bolt **(M6)** **(a)** into star index.

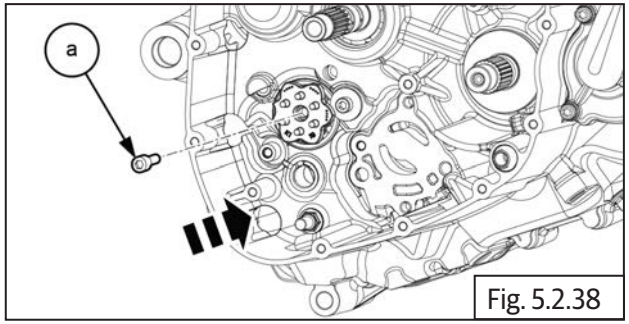

Fig. 5.2.38

NOTE
• **Intex bolt should be used one time only. DO NOT reuse.**

	5mm Allen Key with ratchet
Torque	11 N-m / 1.1kgf-m

- Locate the spring **(a)** in crankcase RH.

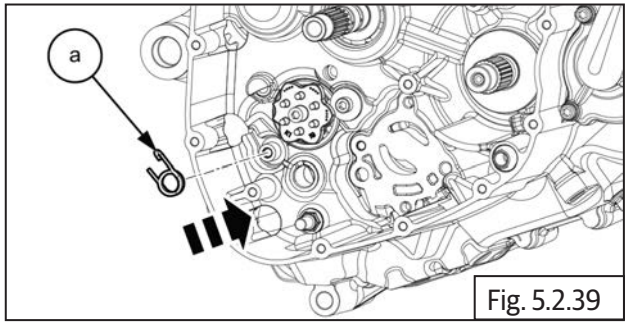

Fig. 5.2.39

- Locate the stopper arm **(a)** and washer **(b)** above spring.
- Ensure spring is seated on the groove provide in the stopper arm **(a)**.

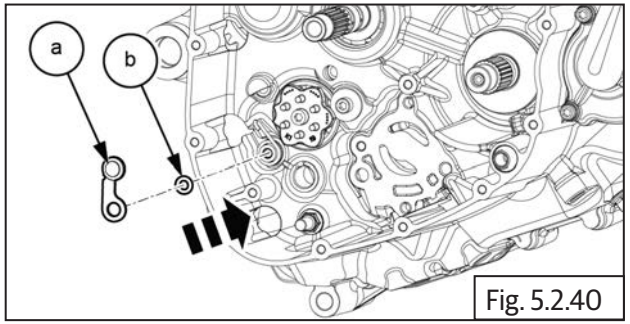

Fig. 5.2.40

⚠ CAUTION
Ensure the arm stopper is seated properly on the bolt step.

- Tighten 1 No Hex flange head bolt **(M6) (a)** into into cam stopper arm .

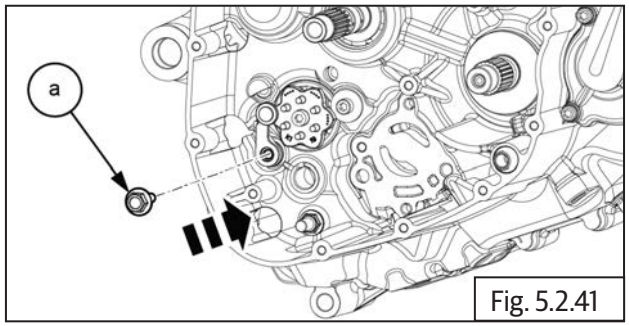

Fig. 5.2.41

NOTE
• **Stopper arm bolt should be used one time only. DO NOT reuse.**

	10mm Socket with ratchet
Torque	11 N-m / 1.1kgf-m

- Insert gear shifter**(a)** from RH side of the engine.

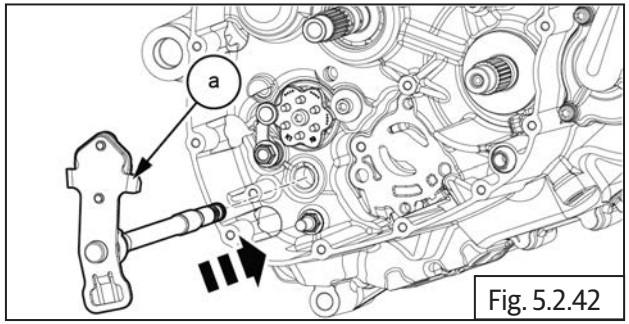

Fig. 5.2.42

- Assemble the stopper bracket **(b)** on crankcase RH locating on gear shifter shaft and tighten **(M6) (a)**.

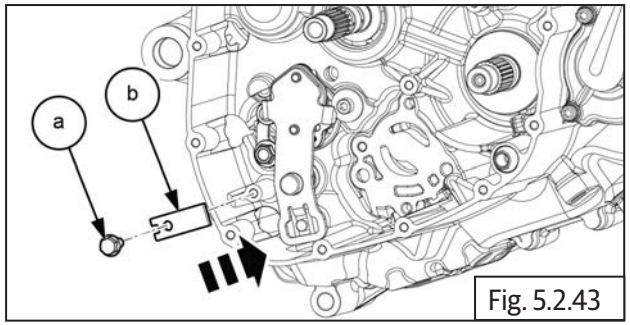

Fig. 5.2.43

	Loctite 243

	10mm Socket with ratchet
Torque	9 N-m / 0.9 kgf-m

- Insert the flat washer **(a)** on gear shifter shaft.

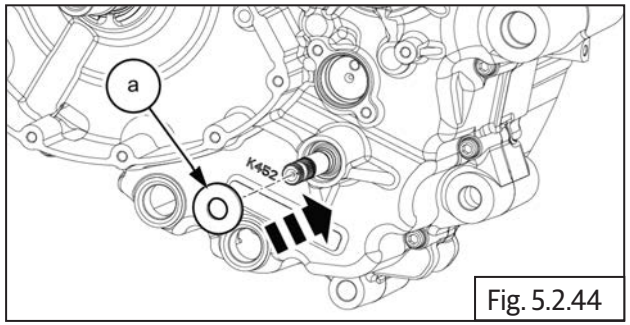

Fig. 5.2.44

- Insert the circlip **(a)** into the shaft.

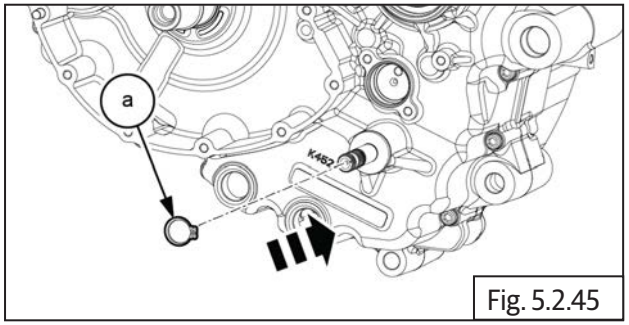

Fig. 5.2.45

NOTE
• *Do not reuse the circlip, Renew all circlips.*

	External Circlip Plier

5.6.10 oil Pump assembly:

NOTE
• *Check oil pump rotates freely before assembly.*
• *Check both pump and idler rotate freely after assembly.*

- Install the oil pump assembly **(a)** into crankcase LH.

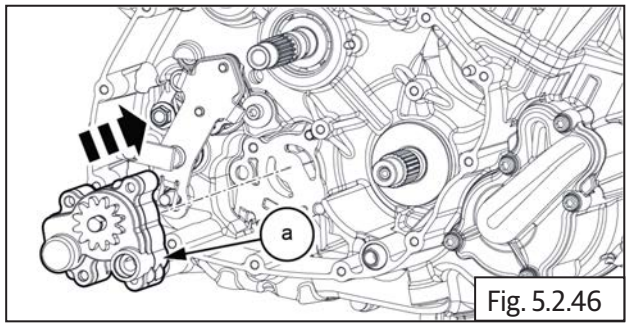

Fig. 5.2.46

- Locate and tighten 3 Nos **(M6) (a)** into oil pump assembly.

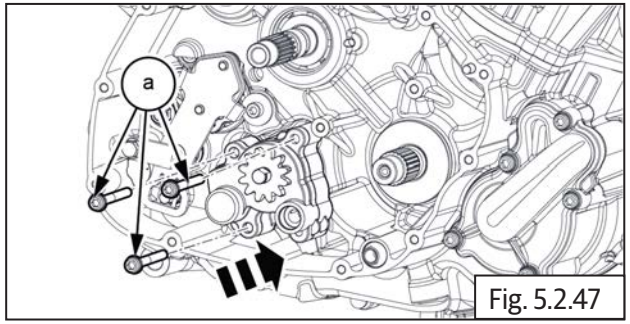

Fig. 5.2.47

	5mm Allen Key with ratchet
Torque	10 N-m / 1.0 kgf-m

- Install the circlip **(a)** into oil pump gear.

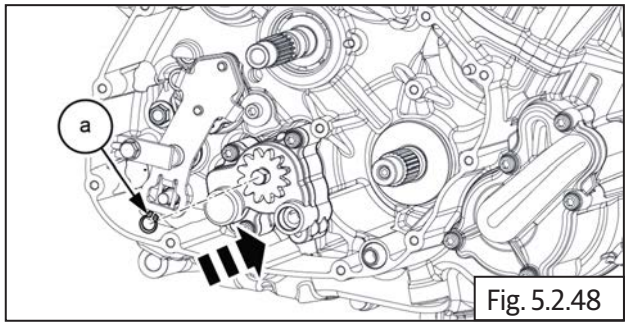

Fig. 5.2.48

NOTE
• *Do not reuse the circlip, Renew all circlips.*

	External Circlip Plier

- Install the thrust washer **(a)** into crankshaft.

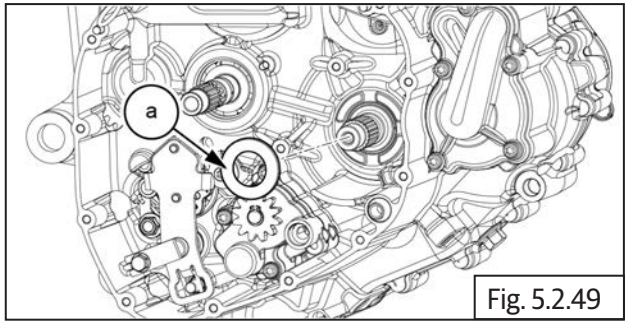

Fig. 5.2.49

- Locate and tighten 1 No stepped bolt **(M6) (a)** with washer **(b)** on ideal gear.

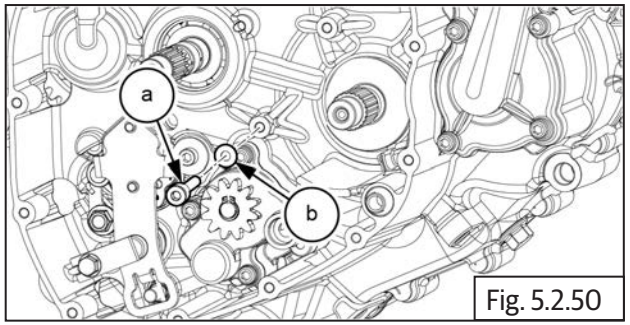

Fig. 5.2.50

	Loctite 243

	5mm Allen Key with ratchet
Torque	9 N-m / 0.9 kgf-m

- Install the ideal gear **(a)** along with washer **(b)**.

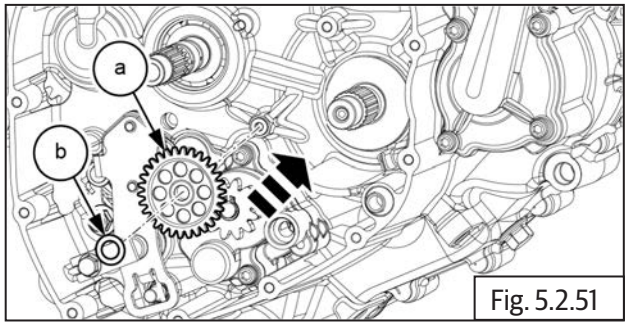

Fig. 5.2.51

- Install the circlip **(a)** into ideal gear.

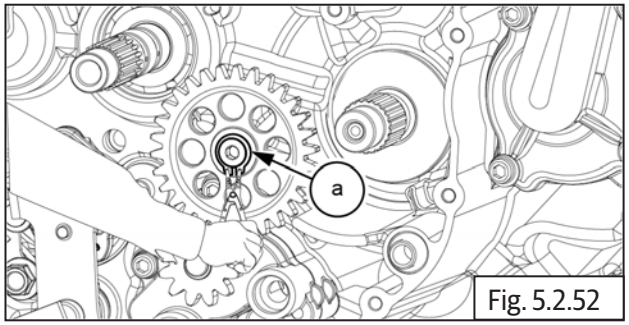

Fig. 5.2.52

NOTE
• *Do not reuse the circlip, Renew all circlips.*

	External Circlip Plier

5.5.11 Primary Drive Gear assembly:

- Locate and tighten the chain tensioner pad **(a)** shoulder bolt **(b)** and washer **(c)**.

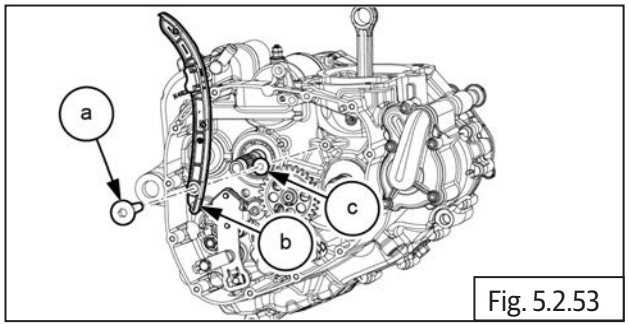

Fig. 5.2.53

	Loctite 243

	6mm Allen Key with ratchet
Torque	11 N-m / 1.1 kgf-m

- Locate and fix the cam chain **(a)**.

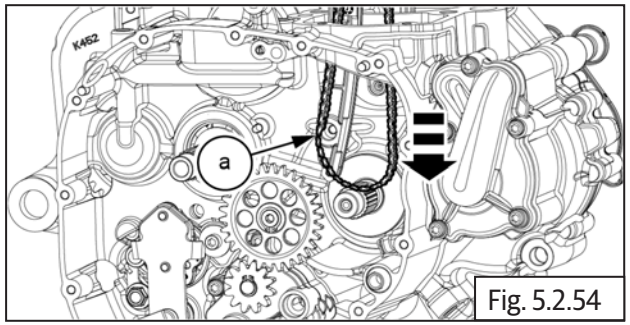

Fig. 5.2.54

- Locate and install the primary drive gear **(a)**.

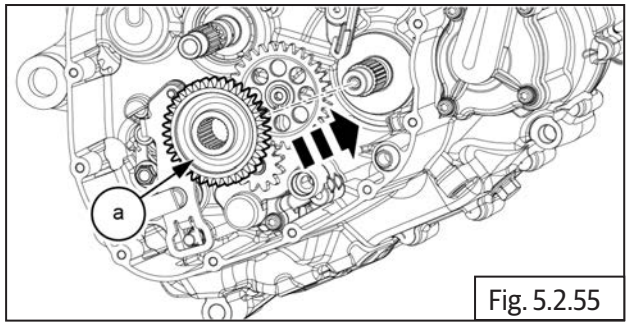

Fig. 5.2.55

- Ensure cam chain properly guide on primary drive gear.

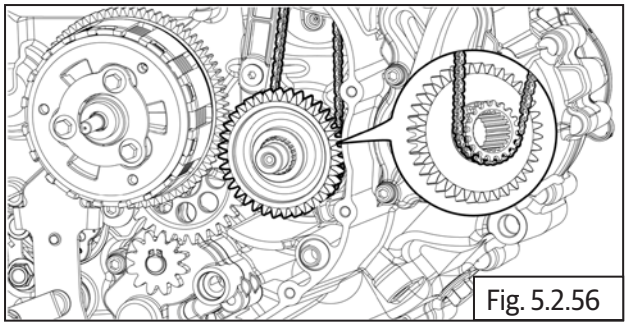
Fig. 5.2.56

- Install the crank nut **(a)** along with washer **(b)**.
- Ensure washer OUT facing to be on nut side
- Apply hand tight on nut.

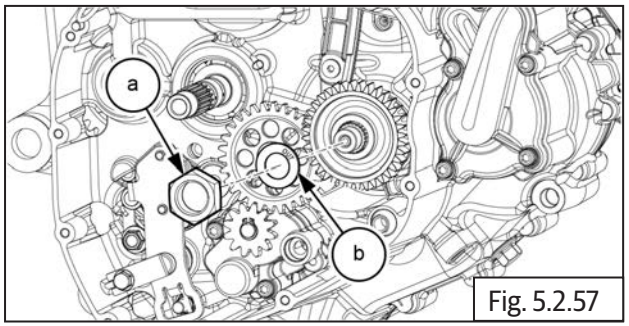

Fig. 5.2.57

	Loctite 243

NOTE
• **Crank Nut should be used one time only. DO NOT reuse.**

NOTE
• **Crank Nut** *is left hand thread. Turn anticlockwise to tighten nut on shaft.*

	24 mm socket with ratchet
Torque	118-122 N-m /11.8 - 12.2 kgf-m

5.5.12 Clutch assembly:

- Locate and tighten the oil jet **(a)** into crankcase.

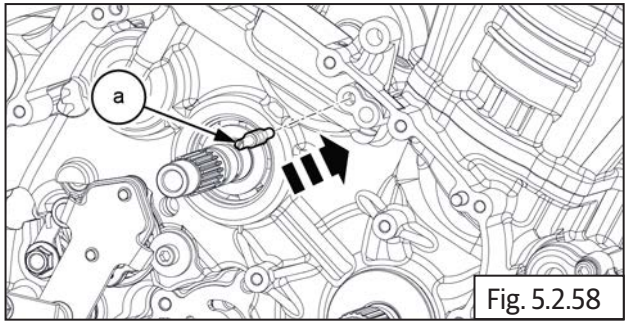

Fig. 5.2.58

	Screw Driver
Torque	1.5 N-m/ 0.15 kgf-m

- Install the O-ring **(a)** into crankcase.

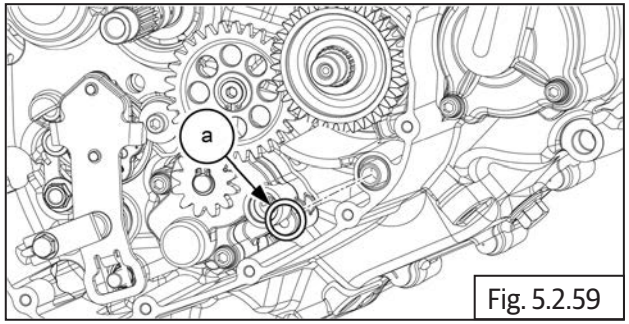

Fig. 5.2.59

NOTE
• **Do not reuse the "O" Rings, Renew all "O" Rings.**

- Install the 2 Nos. Hollow dowel pins **(a)** into crankcase.

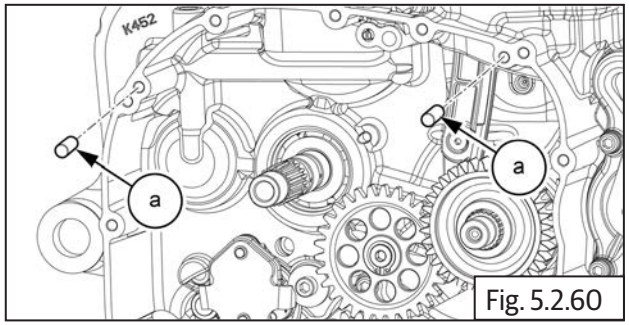

Fig. 5.2.60

- Install the needle bearing **(a),** spacer **(b),** needle roller bearing **(c)** spacer **(d)** & into clutch housing.

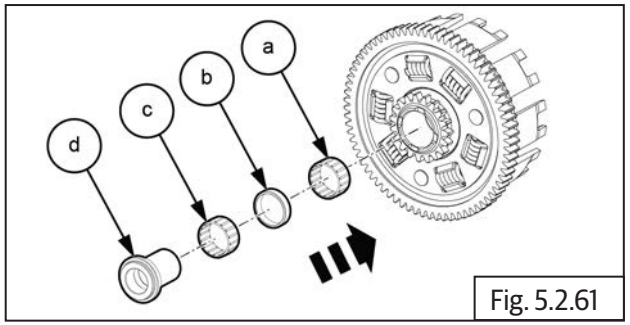

Fig. 5.2.61

- Install the clutch housing **(a)** into counter shaft.

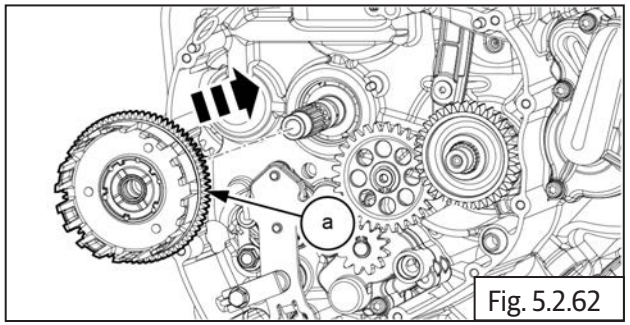

Fig. 5.2.62

- Install the washer **(a)** into clutch assembly.

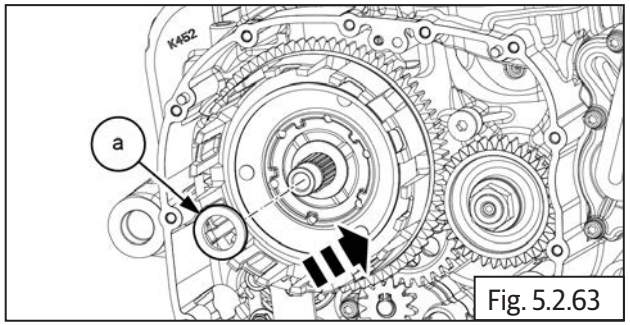

Fig. 5.2.63

- Install the clutch hub **(a)** into clutch housing.

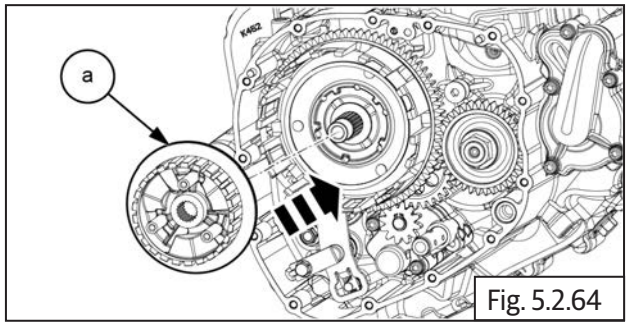

Fig. 5.2.64

- Install the washer **(a)** into clutch hub.

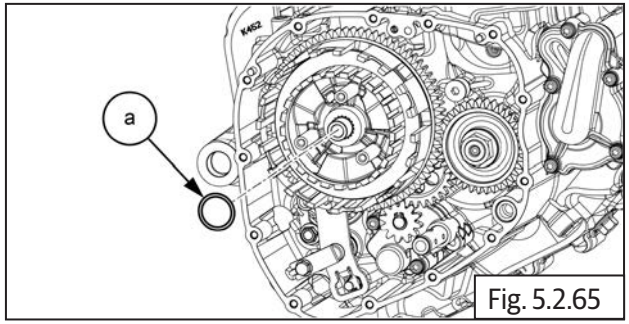

Fig. 5.2.65

- Locate and tighten the nut **(M17) (a)** along with Belleville washer **(b)** into clutch hub.

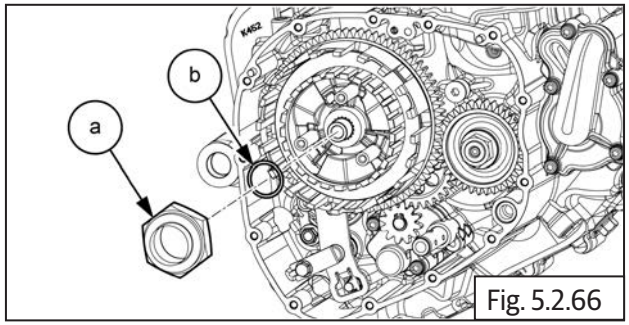

Fig. 5.2.66

NOTE
• **Clutch Nut** *is left hand thread. Turn anticlockwise to tighten nut.*

⚠ **CAUTION**
Hex "U" nut is a left hand thread. Wrong rotation may damage the threads.

- Insert special tool **(b)** in clutch center and ensure it is seated fully on the splines.
- Hold the clutch center firmly and tighten nut **(M17) (a)** by rotating anti-clockwise.

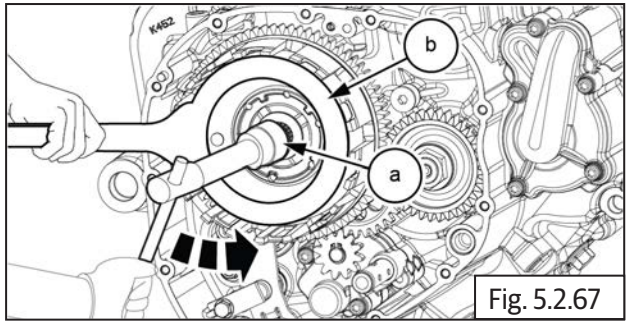

Fig. 5.2.67

SPL 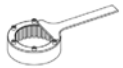	Part No: ST30266/a
	Part Name: Clutch holder

	27mm Socket with ratchet
Torque	120 -130 N-m / 12 - 13 kgf-m

- Insert special tool **(a)** in crankcase RH to lock the crankshaft and prevent rotation.

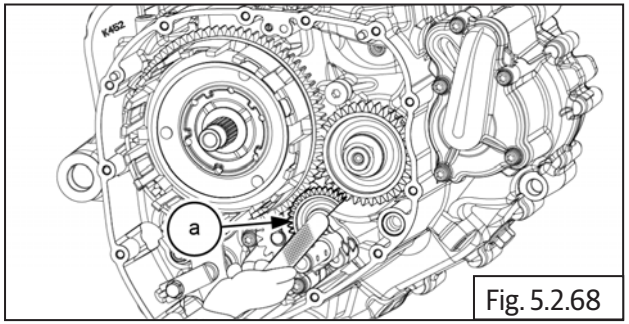

Fig. 5.2.68

SPL	Part No: ST275332
	Part Name: Crank gear locking tool

⚠ **CAUTION**
Crank Nut is left hand thread. Turn anticlockwise to tighten nut on shaft.

- Hold the special tool **(b)** and tighten the Hex"U" nut **(M18) (a)** by rotating Anti-clockwise.

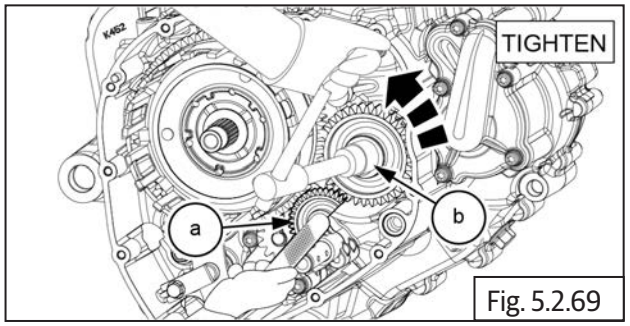

Fig. 5.2.69

	Loctite 243

NOTE
• **Crank Nut should be used one time only. DO NOT reuse.**

NOTE
• **Crank Nut** *is left hand thread. Turn anticlockwise to tighten nut on shaft.*

	24 mm socket with ratchet
Torque	118-122 N-m /11.8 - 12.2 kgf-m

- Install washer **(a)** & spring **(b)** from clutch assembly.

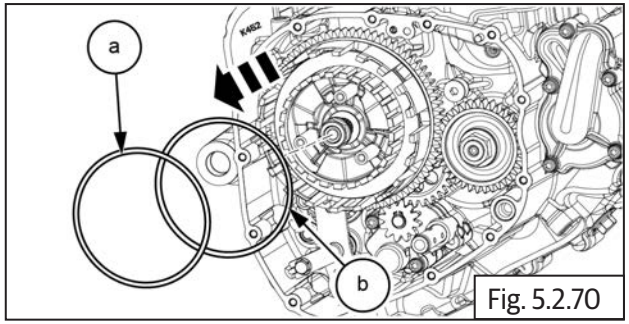

Fig. 5.2.70

- Install friction plate **(a)** and metal plate assembly **(b)** from clutch hub.
- Ensure the splines of the plates are correctly positioned and located on the clutch housing.

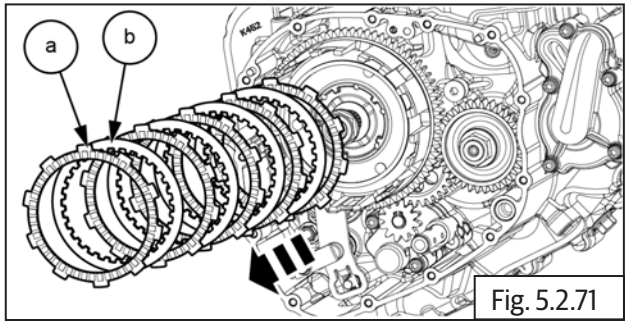

Fig. 5.2.71

- Install the clutch release pin **(a)** into clutch housing.

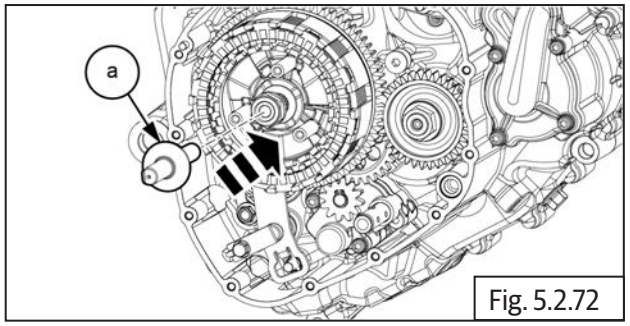

Fig. 5.2.72

- Install pressure plate **(a)** on clutch hub.

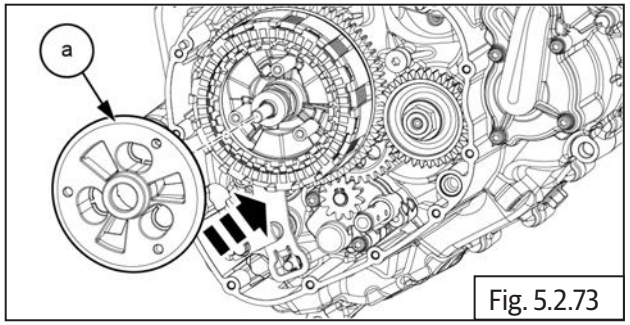

Fig. 5.2.73

- Install the spring **(a)** 3 Nos. into clutch hub.

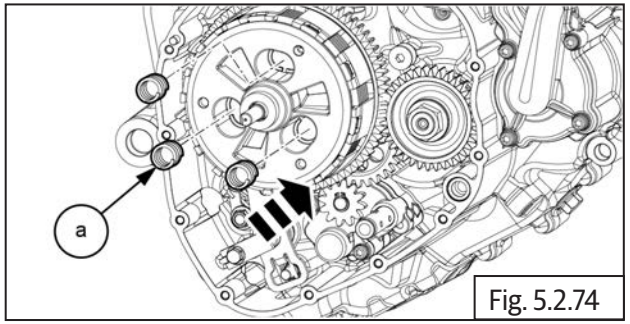

Fig. 5.2.74

- Install mounting bracket **(a)** on clutch hub.

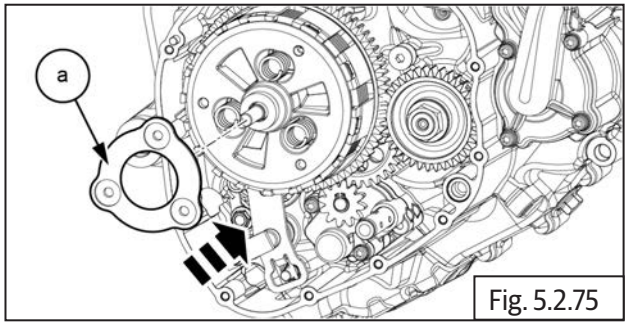

Fig. 5.2.75

- Insert special tool **(a)** in crankcase RH to lock the crankshaft and prevent rotation.

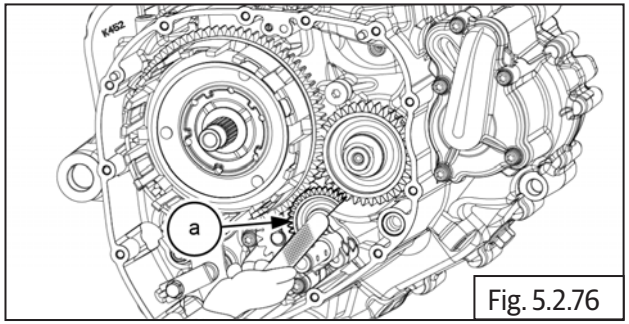

Fig. 5.2.76

SPL	Part No: ST275332
	Part Name: Crank gear locking tool

- Locate and tighten 3 Nos. Hex flange head bolts **(M6) (a)** into the pressure plate evenly to avoid thread damage.

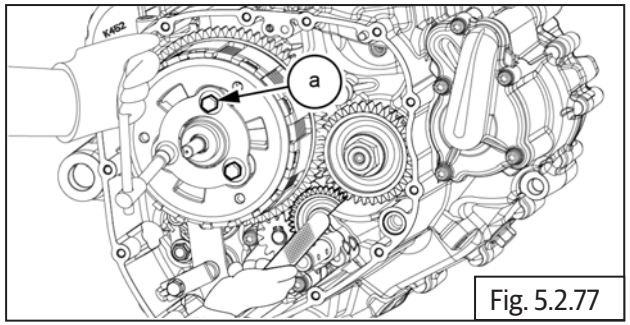

Fig. 5.2.77

	10mm Socket with ratchet
Torque	11 N-m / 1.1 kgf-m

- Install the oil transfer pipe **(a)** along with O-rings 2 Nos **(b)**.

NOTE
• *Lubricate the transfer pipe o-rings* before assemble.

	GL80W90

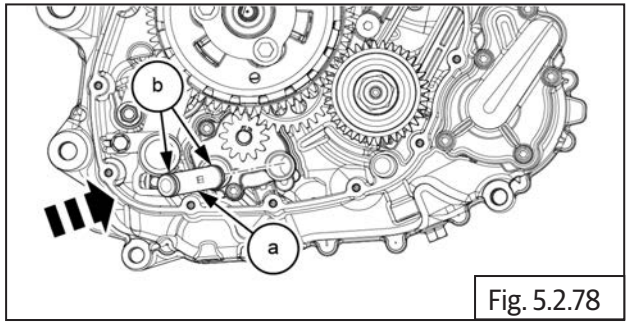

Fig. 5.2.78

5.5.13 Pistons Rings

- **Orientation Pattern**

NOTE
• *Rings should be assembled with proper orientation Refer below image.*

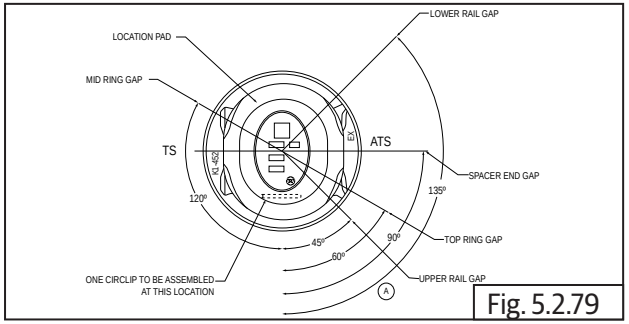

Fig. 5.2.79

- Position and install the Oil control ring with stiffener ring **(a)** into piston bottom groove.

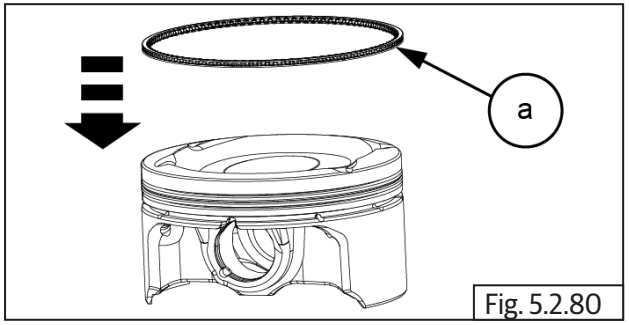

Fig. 5.2.80

- Position and install the Second compression ring **(b)** into piston middle groove.
- Position and install the first compression ring **(a)** into piston Top groove

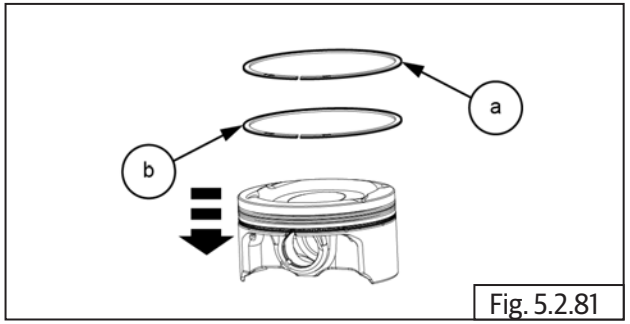

Fig. 5.2.81

5.5.14 Piston Assembly

- Install 2 Nos. dowel pins **(a)** on upper crankcase.

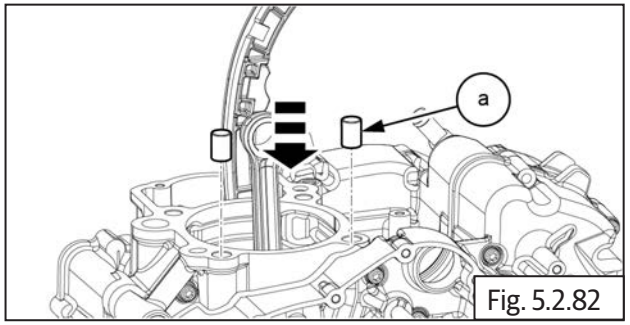

Fig. 5.2.82

- Remove the special tool **(a)** from connecting rod **(b)**.

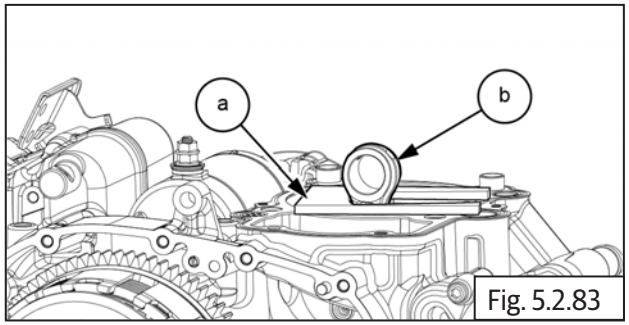

Fig. 5.2.83

SPL	Part No: ST-27529-2
	Part Name: Connecting rod holder

- Ensure the gasket seating area in crankcase is clean.
- Ensure proper seating of the gasket on the dowels on the crankcase.

NOTE
• Apply Threebond 1217H at the LH & RH crankcase joints before assembling the gasket and push the gasket to fill the joint split line after applying the sealant"

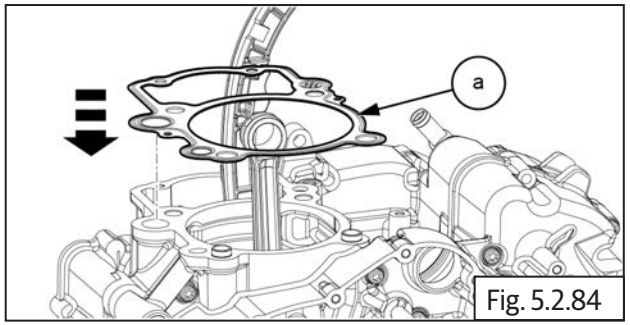

Fig. 5.2.84

- Position and hold the piston **(a)**.

⚠ **CAUTION**
Assemble the piston Ex facing the exhaust side of the engine.

NOTE
• *Lubricate the* piston.

	GL80W90

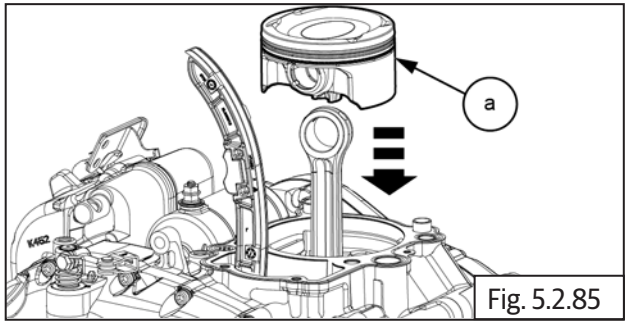

Fig. 5.2.85

- Gently install gudgeon pin **(a)** into the inner side of piston RH and ensure it has completely seated of the connecting rod.

NOTE
• *Lubricate the* gudgeon pin.

	GL80W90

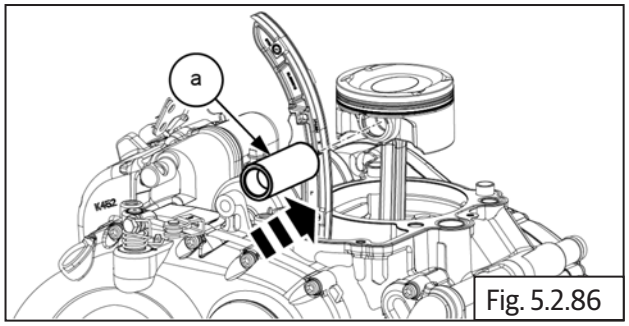

Fig. 5.2.86

5.5.14.b Piston pin second circlip assembly

- circlip fixing special tool.

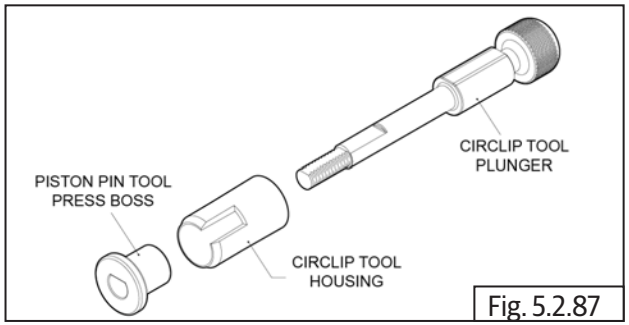

Fig. 5.2.87

- Lubricate the inner surface of tool housing **(b)**.
- Press and insert the circlip **(a)** into tool housing **(b)**.

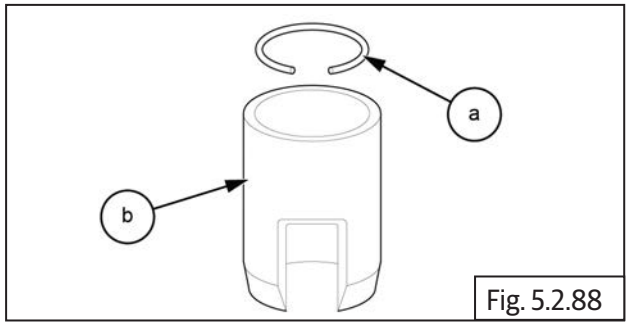

Fig. 5.2.88

	GL80W90

NOTE
• *Do not reuse the circlip, Renew all circlips.*

- Install the circlip tool plunger **(a)** into tool housing **(b)**.

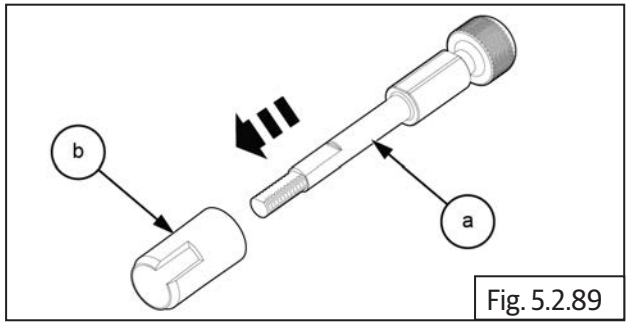

Fig. 5.2.89

NOTE
• *Do not reuse the circlip, Renew all circlips.*

- Press the plunger and check circlip **(a)** moved to middle of tool housing.

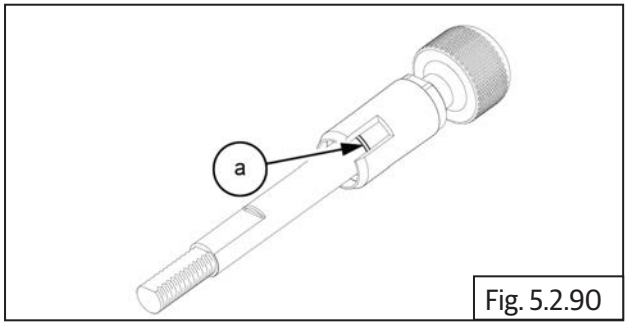

Fig. 5.2.90

- Locate and position the circlip **(a)** with special tool **(b)** to piston gudgeon hole.

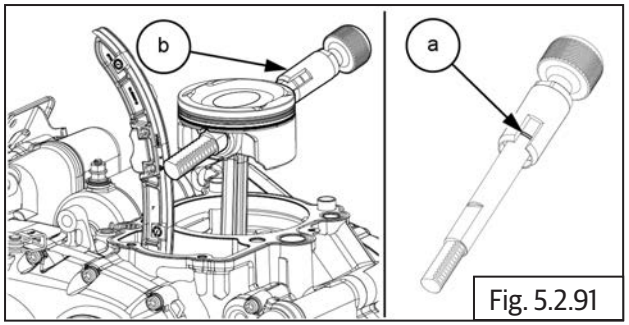

Fig. 5.2.91

- Locate the piston pin tool **(a)** on another side of the piston.

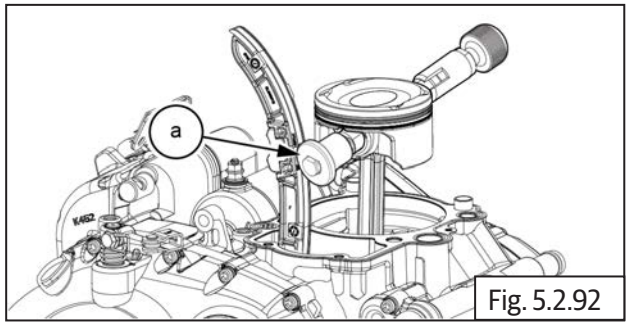

Fig. 5.2.92

- Tighten the nut **(a)** on the special tool **(b)**, until circlip seated on piston gudgeon groove.

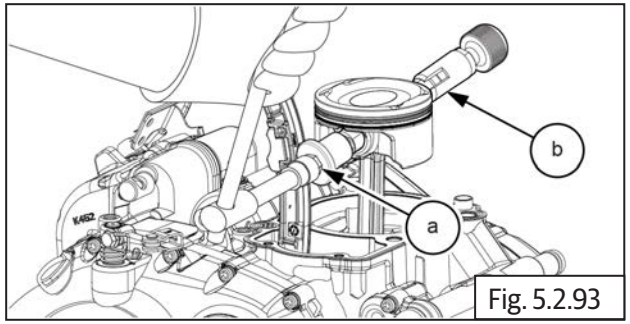

Fig. 5.2.93

	19 mm Socket with ratchet

- Disassemble the special tool **(a)** from the piston.

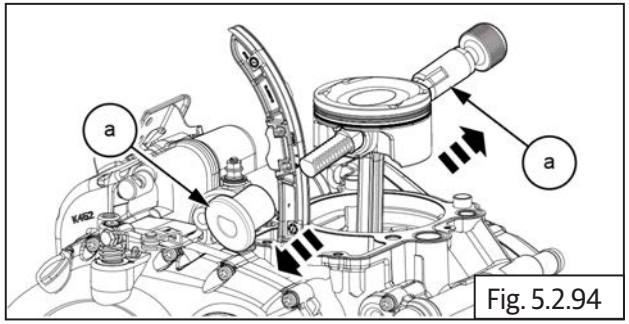

Fig. 5.2.94

NOTE
• Ensure gudgeon pin circlip end gap to face bottom.

- Support the piston vertically and install the cylinder barrel **(a)** into piston.
- Insert the piston rings with your thumbs.

NOTE
• *Lubricate the* inner cylinder bore.

	GL80W90

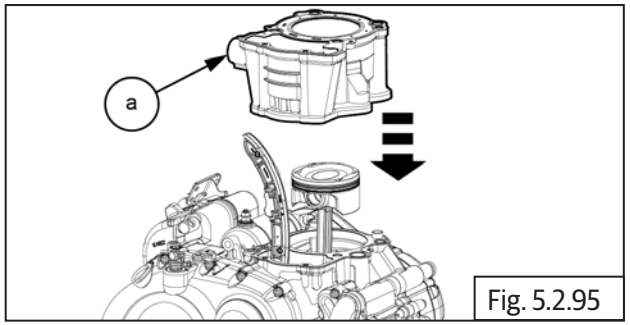

Fig. 5.2.95

- Locate and install the cam chain guide RH **(a)**.

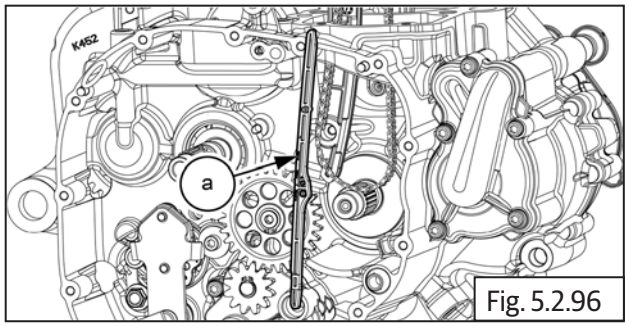

Fig. 5.2.96

5.5.15 Cylinder Head Valve Assembling:

NOTE
• *Check the valve spring seat and valve stem seal have been assembled before the valve are inserted.*

- Assemble inlet valve **(a)** into cylinder head.

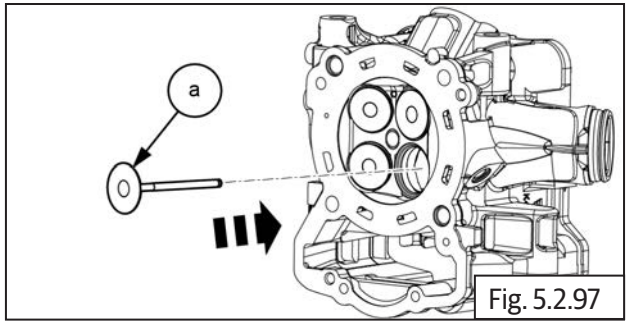

Fig. 5.2.97

- Support the valve from bottom and Insert the valve spring **(a)** into valve stem.

NOTE
• *Ensure the painted surface is facing the cylinder head.*

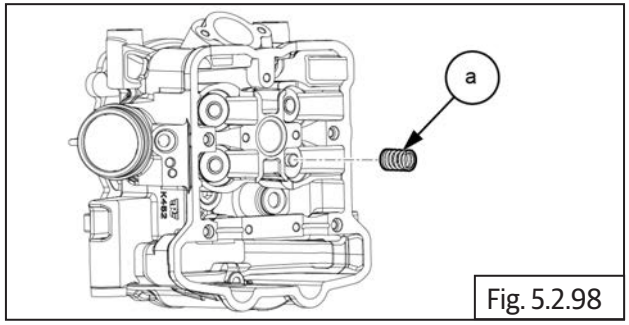

Fig. 5.2.98

- Insert the retainer collect on valve spring **(a)**.

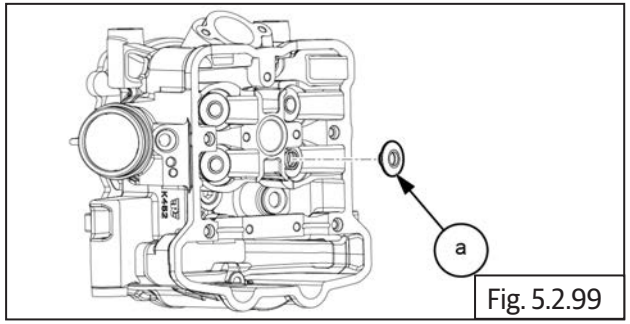

Fig. 5.2.99

Insert a special tool **(a)** and compress valve spring and "hand tighten" the threaded screw.

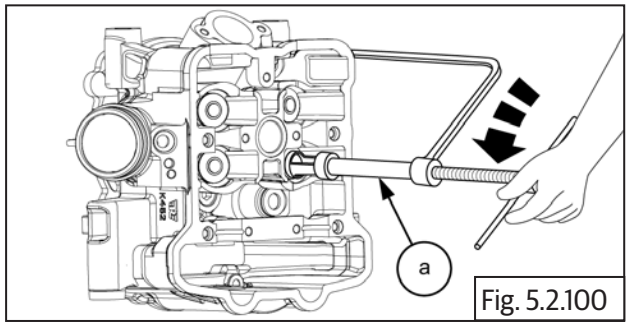

Fig. 5.2.100

SPL	
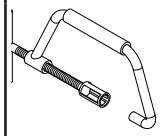	Part No: ST-27528-2
	Part Name: Valve Spring Compressor

- Insert collet **(a)** on the valve stem top portion.

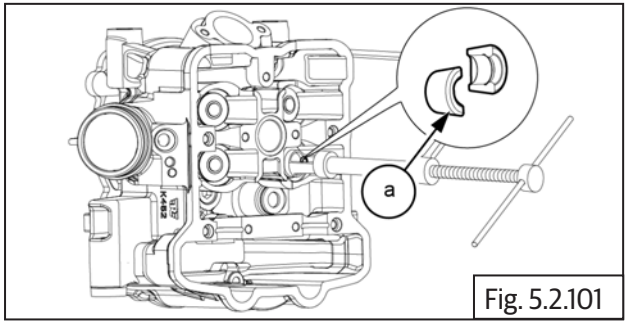

Fig. 5.2.101

Gently unscrew special tool **(a)** screw and remove from the valve spring.

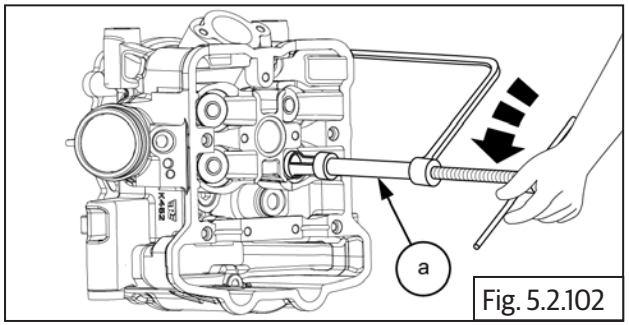

Fig. 5.2.102

- Follow the same procedure to install the other valves into the cylinder head.

5.5.16 Cylinder Head & Noise Suppressor Assembling:

NOTE
• Guide and cam chain should be installed before fitted the cylinder head gasket.

- Install 2 Nos. dowel pins **(a)** on top cylinder barrel.

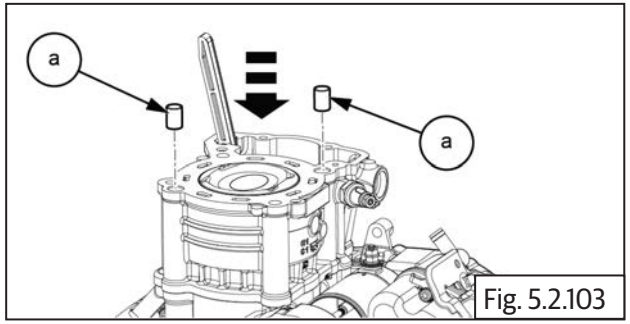

Fig. 5.2.103

- Locate the cylinder head gasket (a) over the cylinder barrel.
- Ensure head gasket orientation to be matching the oil hole position.

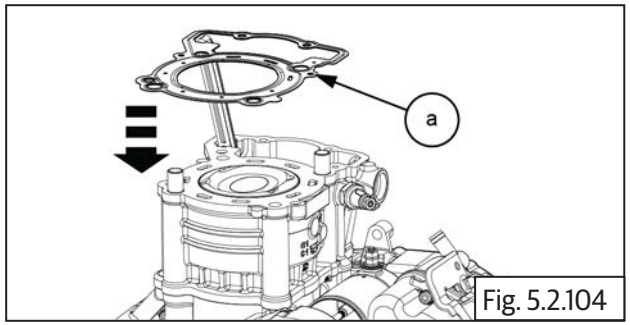

Fig. 5.2.104

- Install the cylinder head (a) over cylinder barrel.

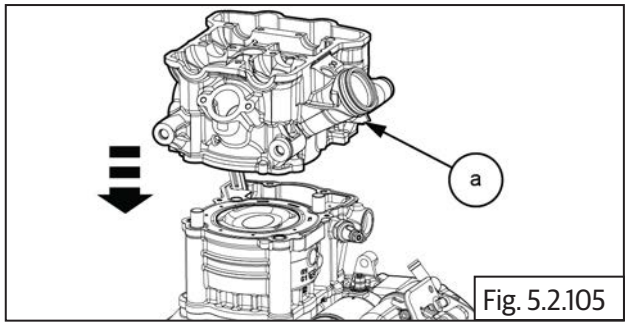

Fig. 5.2.105

- Lift the cam chain. Locate and tighten the noise suppressor bolt **(a)** with seal **(b)** on the cylinder head .

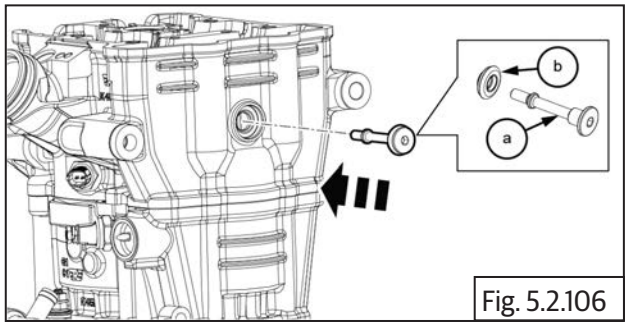

Fig. 5.2.106

NOTE
• *Seal should be used one time only. DO NOT reuse.*

	5mm Allen Key with ratchet
Torque	9N-m / 0.9kgf-m

- Locate new 4 Nos. Hex flange head bolts **(M10) (a)** along with washers **(b)** on the cylinder head.

⚠ CAUTION
Cylinders head bolts (M10) (a) should be used one time only. DO NOT reuse.

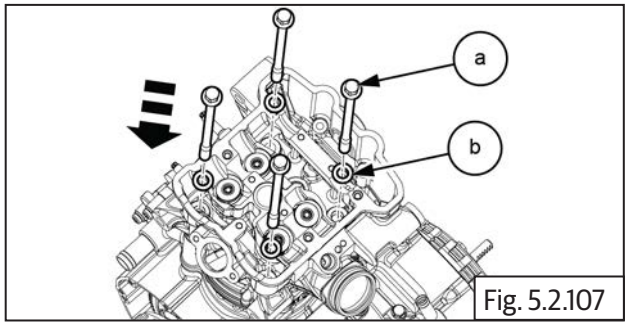

Fig. 5.2.107

	12mm Socket with ratchet

NOTE
• *Lubricate the bolts and washers to avoid friction during tightening.*

	GL80W90

- Locate the 2 Nos. Hex head long bolts **(M6) (a)** along with washer **(b)** on the cylinder head LH.

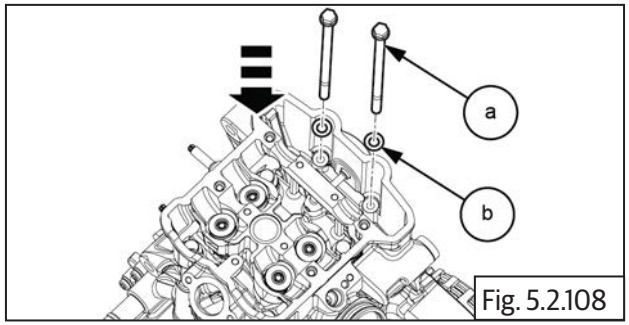

Fig. 5.2.108

	8mm Socket with ratchet
Torque	11 N-m / 1.1 kgf-m

- Tighten the cylinder head bolts below sequence.

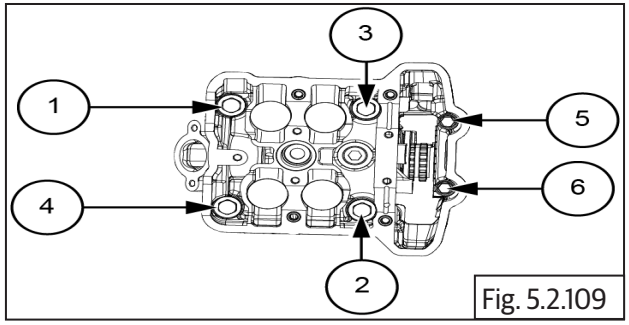

Fig. 5.2.109

- Finally tighten each of the cylinder head bolts using an angular torque wrench, to the specified angular torque value given below and in the same crisscross pattern detailed above.

- Step 1: Fasteners 1-4 to 15Nm
- Step 2: Fasteners 1-4 to 35Nm
- Step 3: Fasteners 1-4 to 180°±1°
- Step 4: Fasteners 5&6 to 11±1Nm

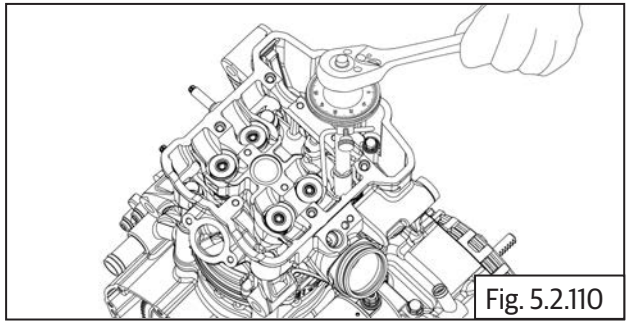
Fig. 5.2.110

	12mm Socket with ratchet 8mm Socket with ratchet

SPL	Part No: ST-27562-1
	Part Name: Angular Torque Wrench

5.5.17 Cam Ladder And Camshaft Assembling:

- Locate the 4 Nos. shims **(a)** on valve stem top portion.

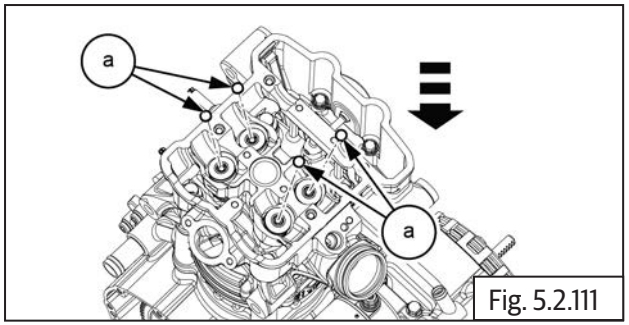

Fig. 5.2.111

- Locate the tappet bucket 4 Nos. on valve stem top portion.

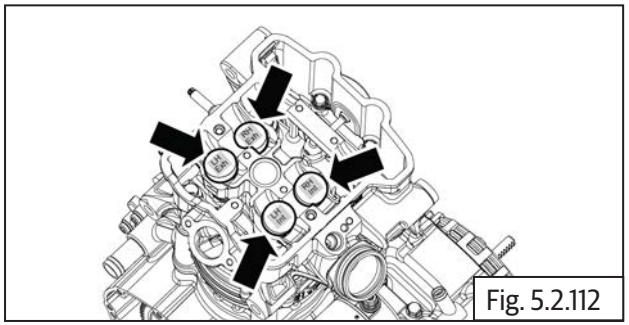
Fig. 5.2.112

- Install the O-ring **(a)** into cylinder head assembly.

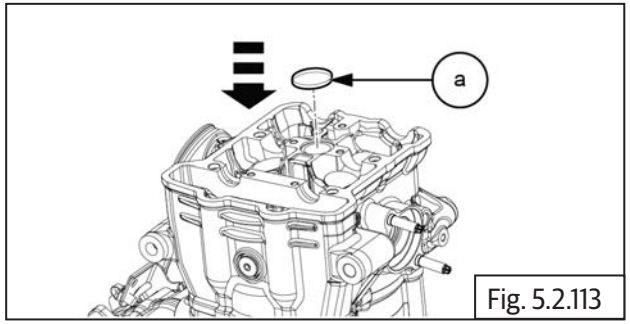

Fig. 5.2.113

NOTE
• Do not reuse the "O" Rings, Renew all "O" Rings.

- Install 4 Nos. dowel pins **(a)** into cylinder head assembly.

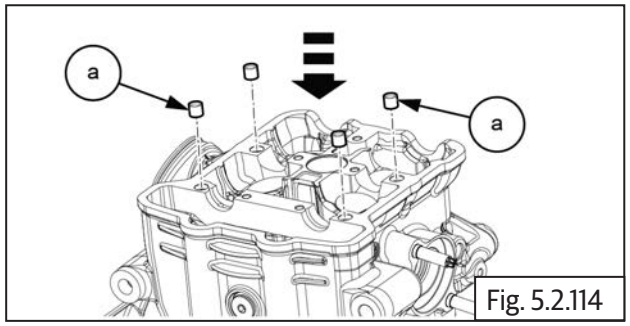

Fig. 5.2.114

5.5.18 Cam Timing Procedure:

Stage 1 - Camshaft Fitment

- Loosen and remove 1Nos. Hex head bolt **(M10) (a)**.

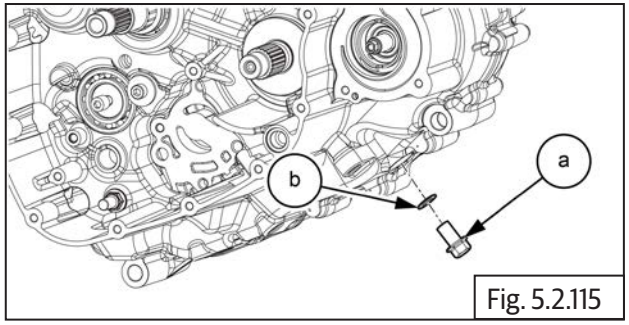

Fig. 5.2.115

	14 mm Socket with Ratchet

- Insert the special tool **(a)** to lock the crank shaft

NOTE
• Once Crank TDC Locking Tool is located in hole in crank, ensure crank cannot rotate in either direction.

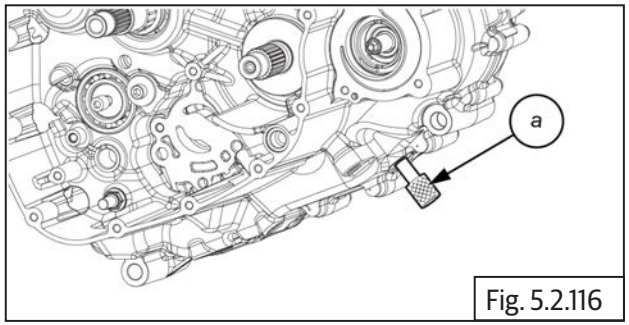

Fig. 5.2.116

SPL	Part No: ST32062/A
	Part Name: Crankshaft TDC Locking Tool

- Locate and install the Camshaft **(a)** & **(b)** 2 Nos. on cylinder head.

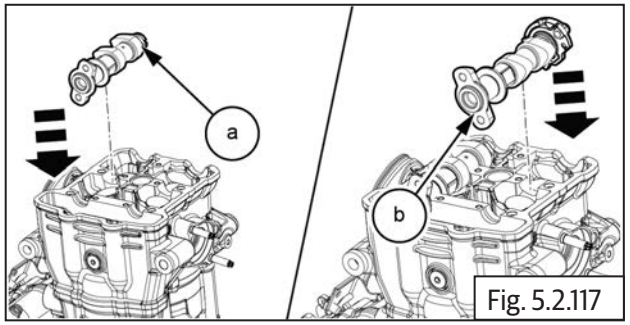

Fig. 5.2.117

- Install 2 Nos. cam ladder **(a)** & **(b)** on Camshafts.

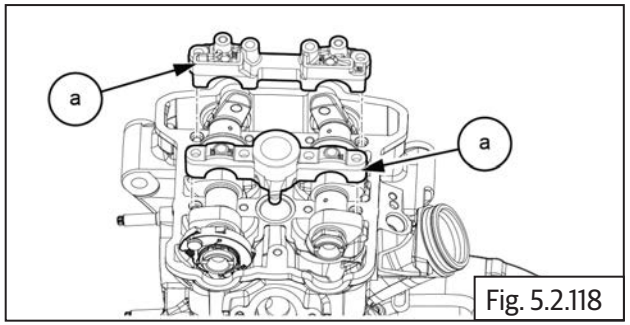

Fig. 5.2.118

- Locate and tighten 6 Nos. Hex head bolts **(M6) (a)** on cam ladder.

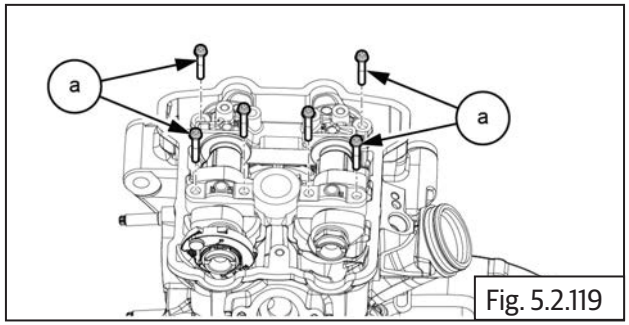

Fig. 5.2.119

	5mm Allen Socket with ratchet
Torque	9-11 N-m / 0.9 - 1.1 kgf-m

NOTE
• Do not fit 2No cap bolts **(M6) on** top guide bolts in position.

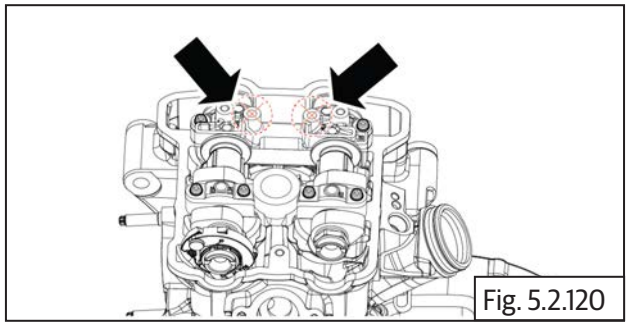
Fig. 5.2.120

- Locate and tighten cap bolts **(M6) (a)** on special tool **(b)** to lock the cam TDC.

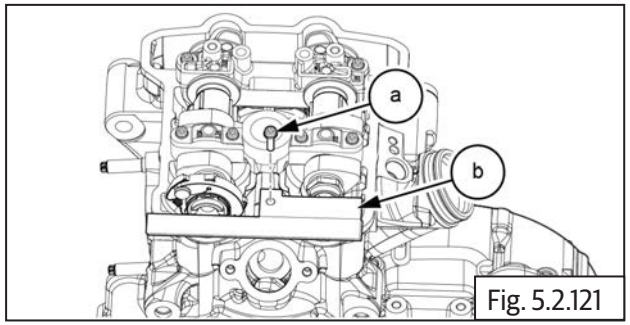

Fig. 5.2.121

	5mm Allen Socket with ratchet

SPL	Part No: ST32061/A
	Part Name: Cam TDC Locking Tool

Stage 2 - Cam Sprocket Fitment

- Loop cam chain **(a)** over exhaust cam sprocket and fit sprocket onto exhaust camshaft.

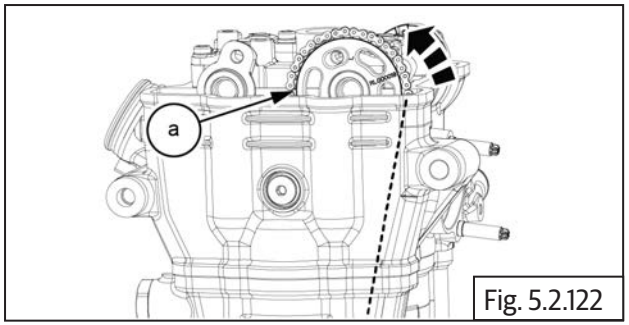

Fig. 5.2.122

NOTE
• *Ensure no chain slackness between crank sprocket and exhaust cam sprocket. Refer below image.*

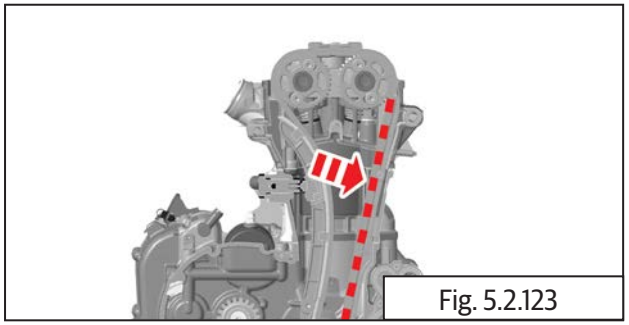
Fig. 5.2.123

- Check to see if the threaded hole **(a)** in the camshaft is fully visible in the slot of the cam sprocket

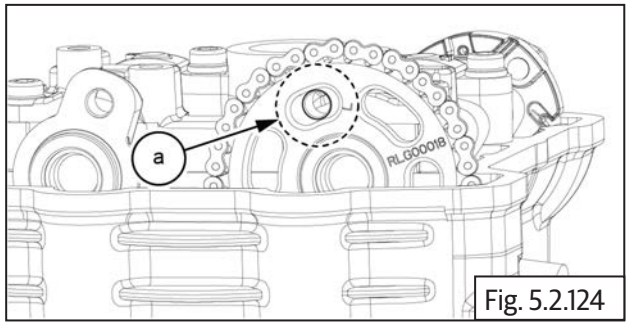

Fig. 5.2.124

NOTE
• If the threaded hole **(a)** is fully visible fix the bolt..

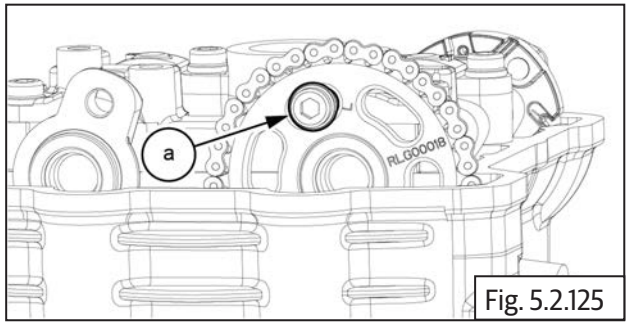

Fig. 5.2.125

	6 mm Allen Key with Ratchet

NOTE
• Cam sprocket bolt should be used one time only. DO NOT reuse. • Do not tighten bolt fully - sprocket must be free to rotate the full length of the slot.

- If the threaded hole **(a)** **is not fully visible**, remove the sprocket from the camshaft, lift the chain off the sprocket and rotate the sprocket by one tooth.
- Re-fit sprocket and check again. Repeat until threaded hole **(a)** is fully visible and fit bolt.

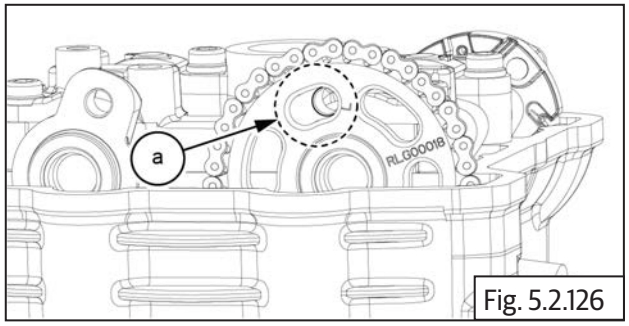

Fig. 5.2.126

- Loop cam chain over intake cam sprocket and fit sprocket onto intake camshaft
- Rotate sprocket anti clockwise to ensure there is no slack in the chain between the exhaust cam sprocket and the intake cam sprocket.

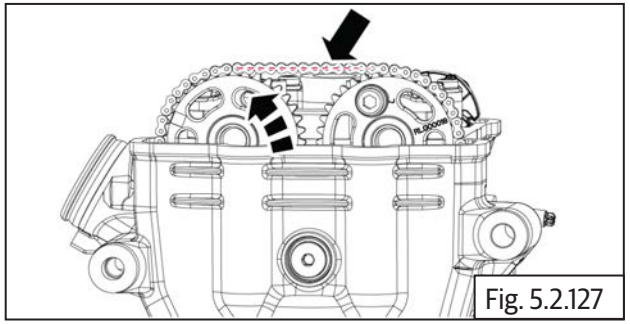
Fig. 5.2.127

- Repeat steps above to ensure threaded hole is fully visible and fit bolt on inlet cam sprocket.

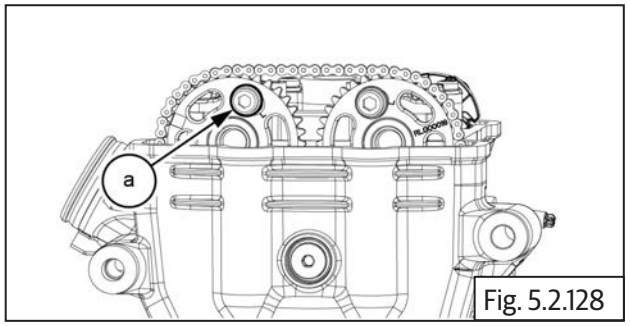

Fig. 5.2.128

	6 mm Allen Key with Ratchet

NOTE
• Cam sprocket bolt should be used one time only. DO NOT reuse. • Do not tighten bolt fully - sprocket must be free to rotate the full length of the slot.

Stage 3 - Top Guide and Hydro-Mechanical Tensioner Fitment

- Locate and tighten the cap bolts **(M6) (a)** 2 Nos on top guide plate.

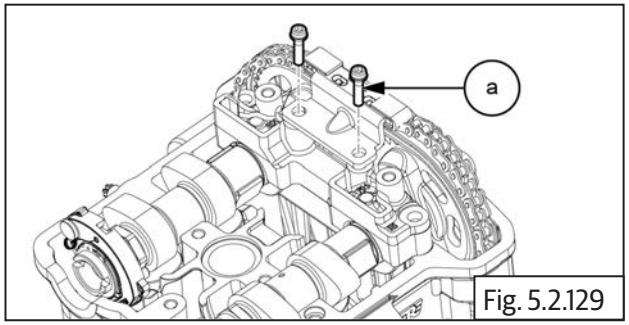

Fig. 5.2.129

	5 mm Allen Key with ratchet

- Tighten cam cap bolts 8Nos **(M6)** to specified torque according to tightening sequence.

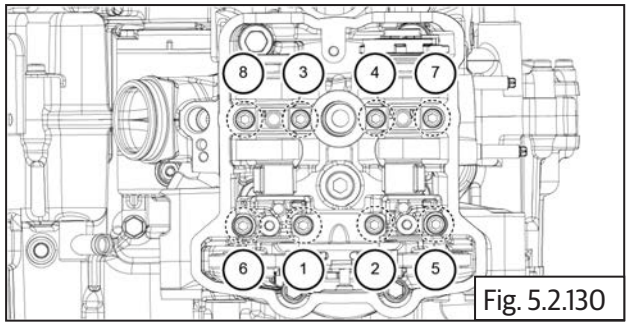

Fig. 5.2.130

	5 mm Allen Key with ratchet
Torque	10 N-m / 1.0 kgf-m

- Check for chain slack between intake cam sprocket and crank sprocket.

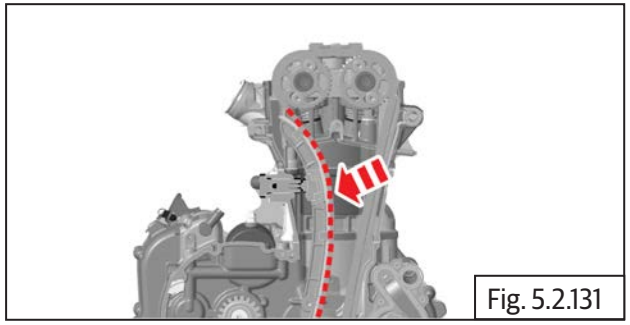
Fig. 5.2.131

NOTE
• If chain is tight here it may not be seated correctly on the crank sprocket.

NOTE
• *HMT should be in Transit position before install refer below image.*

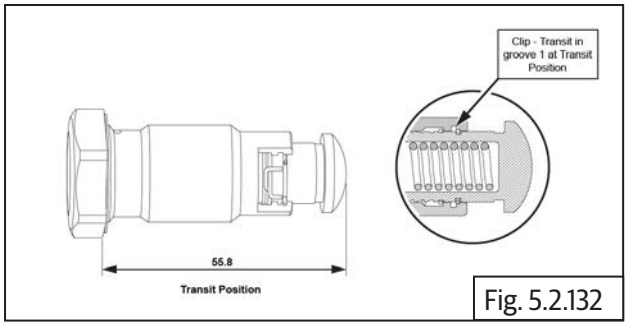

Fig. 5.2.132

- Install the HMT **(a)** with new sealing washer **(b)** on engine RHS barrel.

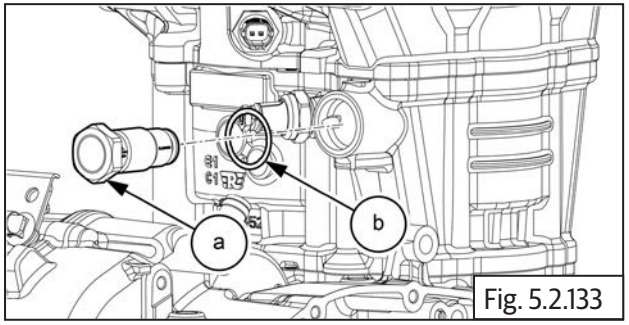

Fig. 5.2.133

	27mm Allen Key with ratchet
Torque	40 N-m/4.0 kgf-m

- Using a special tool push cam chain against tensioner arm. Refer below image.

NOTE
• Listen for "click" as HMT releases from transit position and ratchet is disengaged. • "click" will only be heard if background noise level is low.

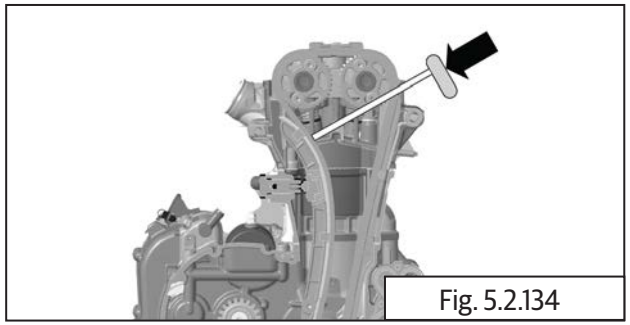

Fig. 5.2.134

SPL	Part No: ST32070/A
	Part Name: Nylon rod

- Chain should now feel tight between cam sprockets
- If chain feels slack between sprockets, repeat steps above to release HMT from transit position.

Stage 4 - Cam Sprocket Bolt Tightening

- Cam TDC Locking Tool still bolted to the head to prevent the camshafts from rotating.
- Hold the Camshaft and Tighten cam sprocket bolt 2 Nos **(M8) (a)** .

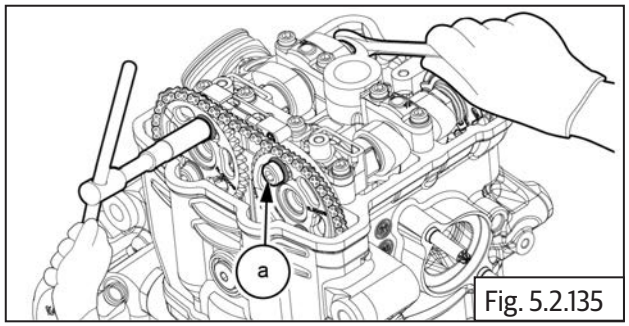

Fig. 5.2.135

	6mm Allen Key with ratchet 22mm Double End Spanner
Torque	35 N-m / 3.5 kgf-m

NOTE
• Bolts must be tightened to full torque within 10 minutes of first insertion. • If they are left longer than this the bolts must be replaced with new ones.

- Remove the special tool **(a)** from Camshaft.

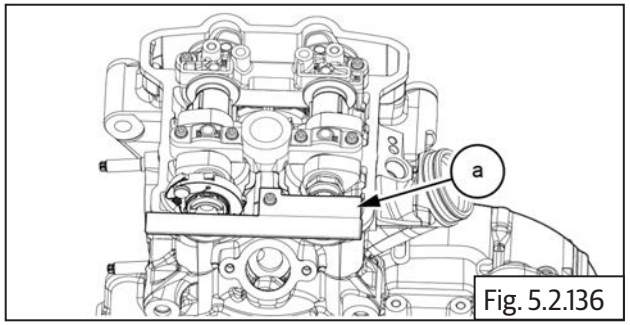

Fig. 5.2.136

SPL	Part No: ST32061/A
	Part Name: Cam TDC Locking Tool

- Remove the Crankshaft TDC locking tool **(a)** from the crankcase.

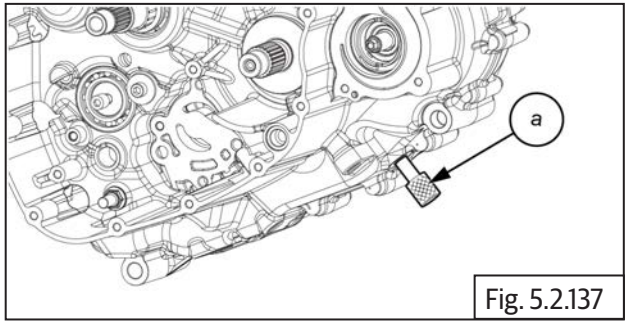

Fig. 5.2.137

SPL	Part No: ST32062/A
	Part Name: Crankshaft TDC locking tool

- Rotate the crank shaft **360 degree** on clock wise for another slotted hole on cam chain sprocket is at top most position.

NOTE
• Bolts must be tightened to full torque within 10 minutes of first insertion. • If they are left longer than this the bolts must be replaced with new ones.

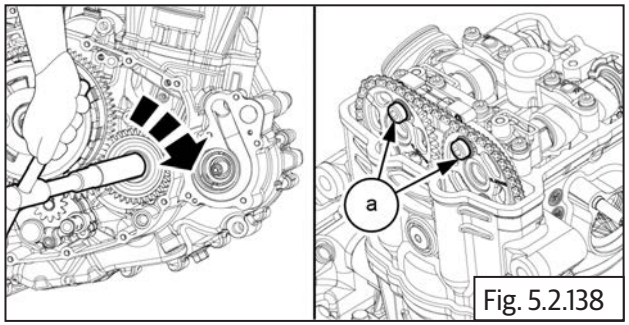

Fig. 5.2.138

- Hold the Camshaft and Tighten cam sprocket bolt 2 Nos **(M8) (a)** .

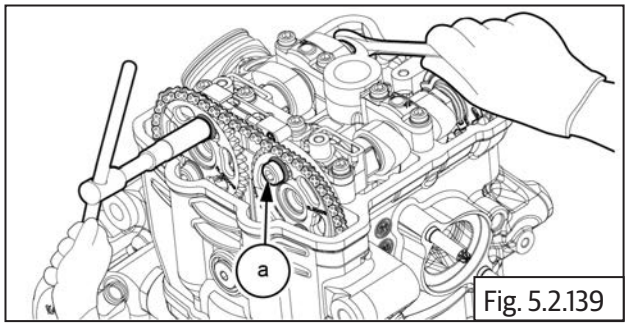

Fig. 5.2.139

	6mm Allen Key with ratchet 22mm Double End Spanner
Torque	35 N-m / 3.5 kgf-m

Stage 5 - Camshaft Timing Verification

- Rotate the crank shaft **720 degree** on clock wise
- Watch for correct actuation of intake and exhaust valve train.

NOTE
• *During engine rotation, chain run between the sprockets may become slack when intake valves are closing..*

- Chain may drop by up to 3mm between sprockets and will become tight again as the engine is rotated further and intake valves close
- This is normal operation
- After two revolutions align the bottom edge of both camshaft slots with top surface of head.

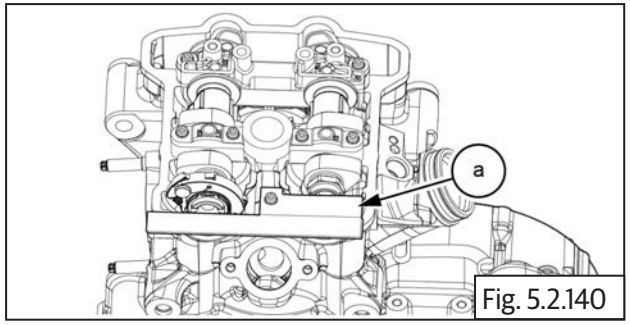

Fig. 5.2.140

SPL	
	Part No: ST32061/A
	Part Name: Cam TDC Locking Tool

- Fix crank at TDC position using Crank TDC Locking tool - Tighten by hand only.
- Once pin is located in hole in crank, ensure crank cannot rotate in either direction

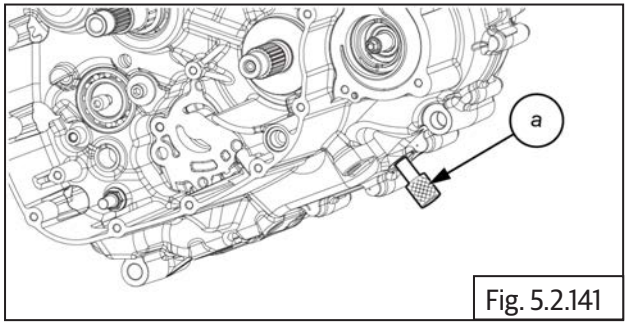

Fig. 5.2.141

SPL	
	Part No: ST32062/A
	Part Name: Crankshaft TDC locking tool

- Remove Crank TDC Locking Tool
- Remove Cam TDC Locking Tool
- Locate and tighten the crank lock plug bolt **(M10)** **(a)** with new copper washer **(b)** .

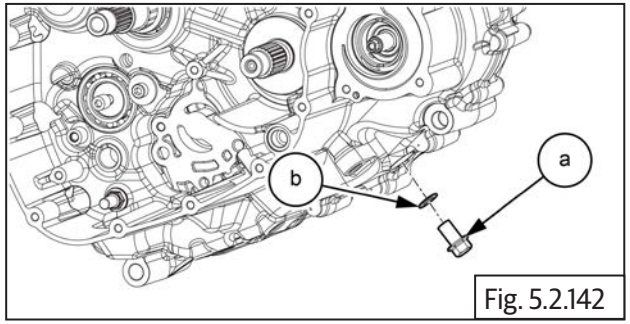

Fig. 5.2.142

	14 mm Socket with Ratchet
Torque	30 -34 N-m / 3.0 - 3.4 kgf-m

5.5.19 Water Pump assembly:

- Locate the mechanical seal **(b)** on the water pump shaft.

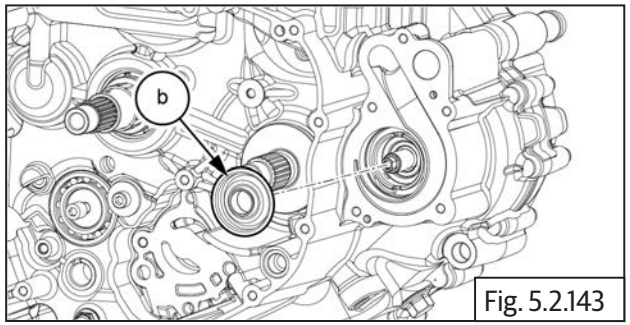

Fig. 5.2.143

- Locate and tighten 4 Nos hex bolts **(M6)** on special tool **(a)**.

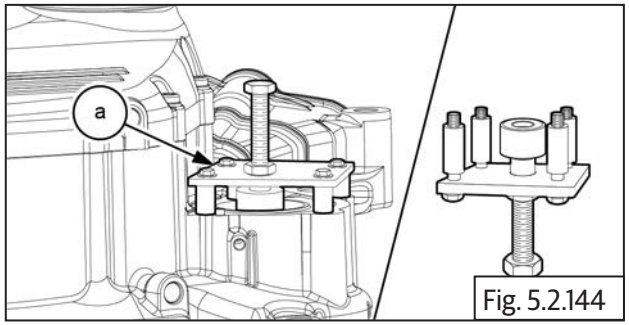

Fig. 5.2.144

SPL	Part No:ST32068/A
	Part Name: Coolant Pump Oil Seal Assembly Tool

	10mm Socket With Ratchet

⚠ CAUTION

- *Do not damage the water pump seating surface while install the seal.*

- Tighten the special tool top bolt **(a)** until lip seal to proper seat.

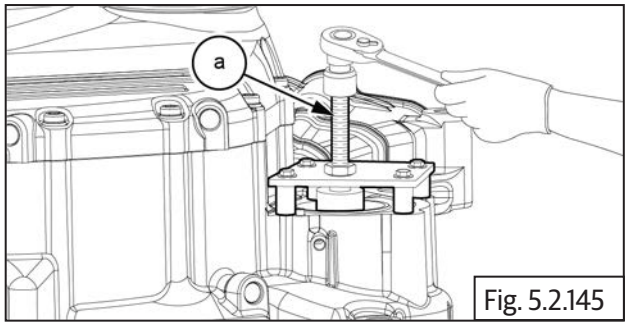

Fig. 5.2.145

	27 mm Socket With Ratchet.

- Remove the special tool **(a)** from water pump drive shaft.

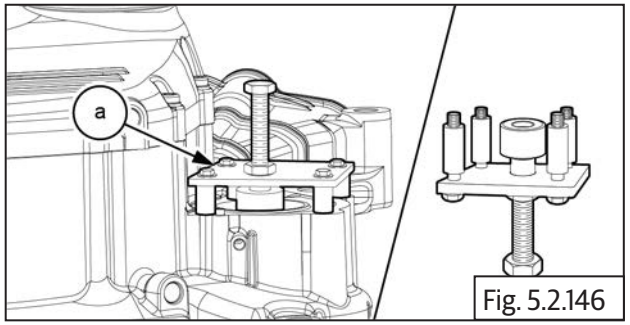

Fig. 5.2.146

	10mm Socket With Ratchet

- Install impeller **(a)** into RH crankcase.

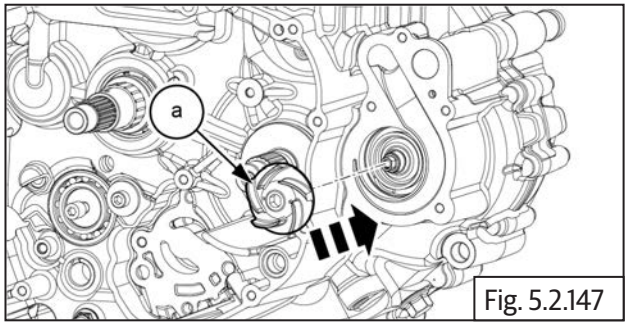

Fig. 5.2.147

- Locate and tighten 1 No. Hex head bolt **(M5) (a)** along with washer **(b)** into impeller.

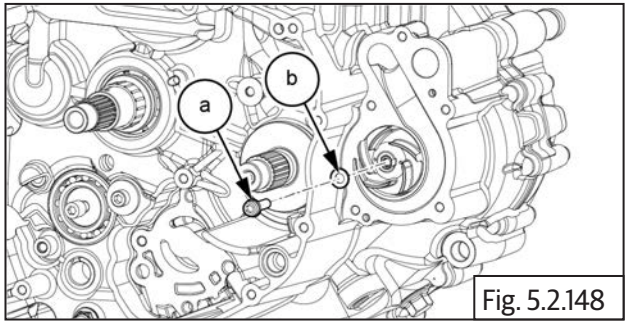

Fig. 5.2.148

	3 mm Allen Key with ratchet
Torque	4.5 N-m / 0.45 kgf-m

	3 mm allen key with Ratchet

- Install water pump cover seal **(a)**.

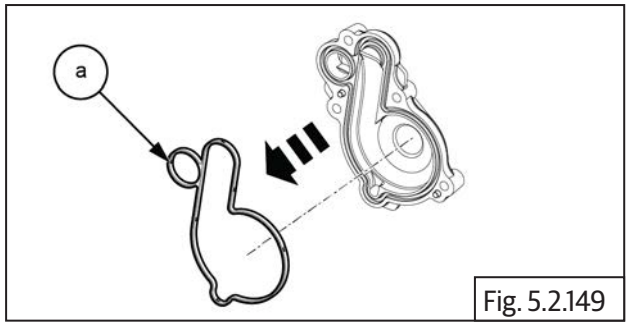

Fig. 5.2.149

NOTE
• *Cover Seal should be used one time only. DO NOT reuse.*

- Install water pump cover **(a)** along with seal into RH crankcase.

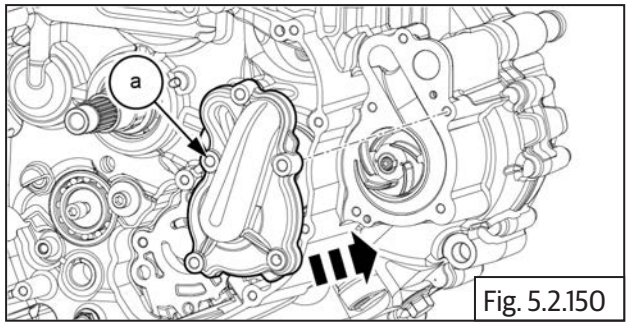

Fig. 5.2.150

- Locate and tighten 5 Nos. Hex head bolts **(M6) (a)** along with 1 No. new copper washer **(b)** on water pump cover.

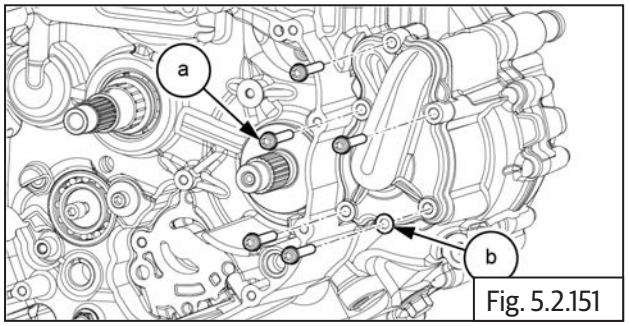

Fig. 5.2.151

	5mm Allen Key with ratchet
Torque	10 N-m / 1.0 kgf-m

5.5.20 Cylinder Head Cam Cover Assembling:

NOTE
• *Ensure the cover cylinder head seating surface and gasket seating groove are clean.*
• *Gasket is* **one time use** *only.*

- Locate the new gasket **(a)** in the groove in cylinder head **(b)** and ensure its is properly and evenly seated.

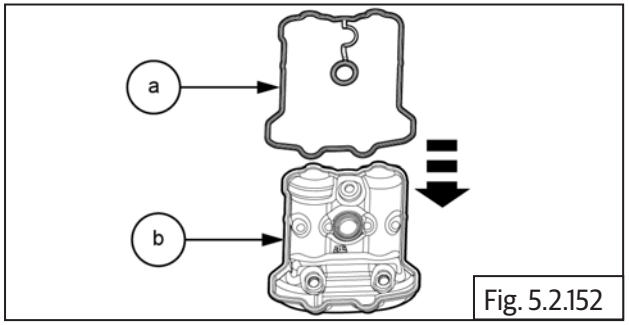

Fig. 5.2.152

- Locate the cylinder head cam cover carefully.

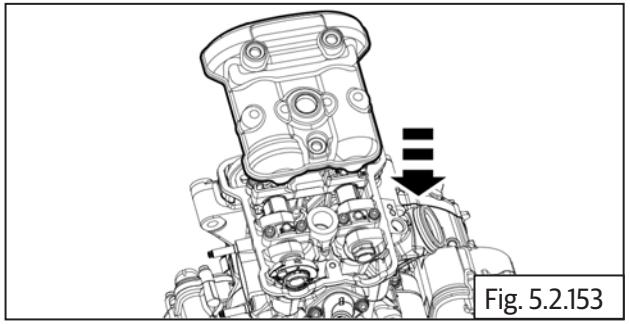

Fig. 5.2.153

- Assemble new seals washers **(a)** on the 3 Nos. Hex socket head bolts **(M6) (b)**.
- Locate the bolts **(M6) (b)**. on cylinder head cover tighten bolts to cylinder head evenly to specified torque.

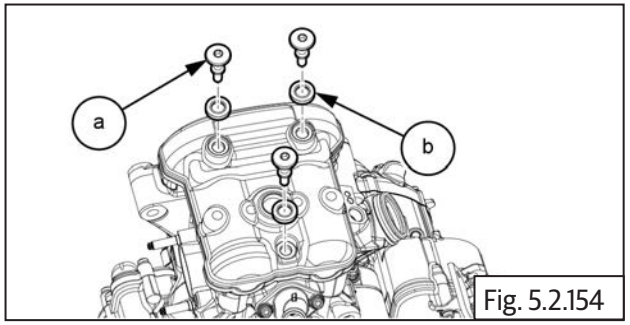

Fig. 5.2.154

	5mm Allen Key with ratchet
Torque	11 N-m / 1.1 kgf-m

5.5.21 Magneto Assembly & Idler Gear installation:

- Slightly rotate the starter gear **(a)** in an anticlockwise direction. Gently locate the gear **(a)** into the rotor roller clutch bearing.

⚠ CAUTION
• Be careful during this process as the roller clutch bearing may fall down or collapse.

- Install starter clutch **(a)** on magneto rotor assembly.

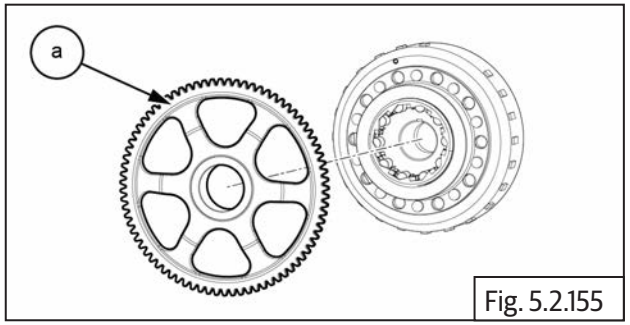

Fig. 5.2.155

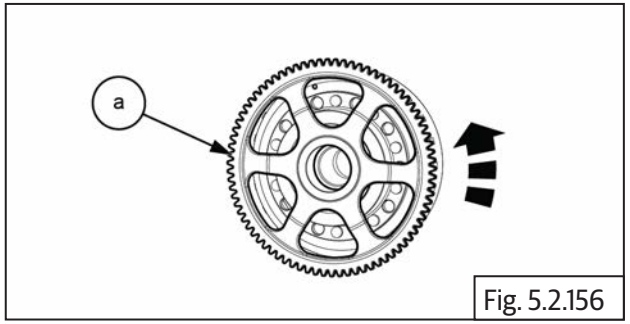

Fig. 5.2.156

- Install woodruff key **(a)** into crankshaft.

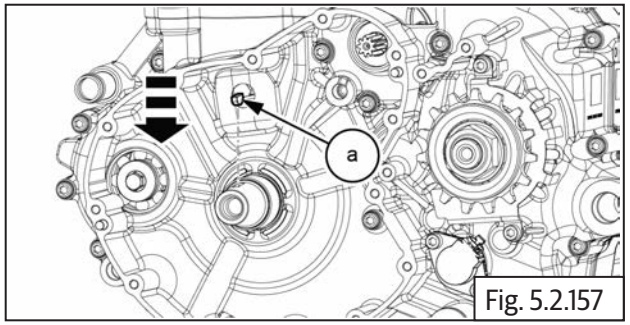

Fig. 5.2.157

- Locate magneto rotor (a) on crankshaft duly ensuring the slot in the rotor is positioned correctly on woodruff key.

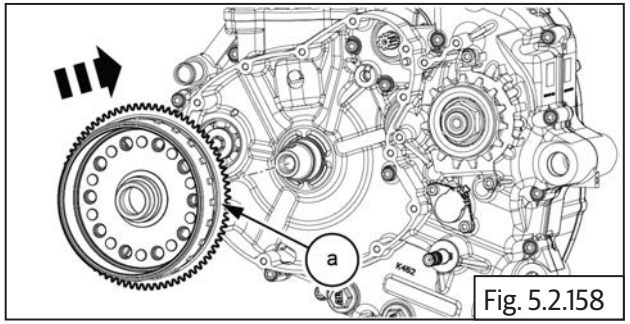

Fig. 5.2.158

- Locate the 1 No. Hex flange head bolt **(M12) (a)** along with tappet washer **(b)** on magneto rotor**.**

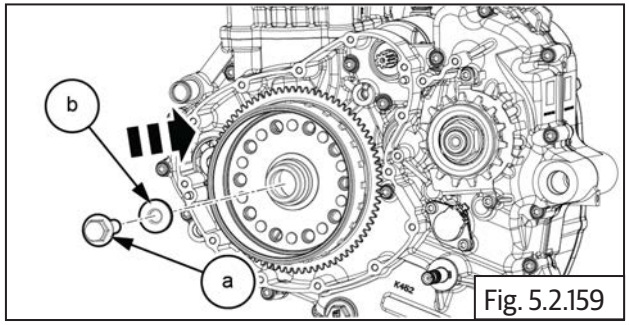

Fig. 5.2.159

- Locate the special tool **(a)** to tighten the magneto rotor **(b)**.

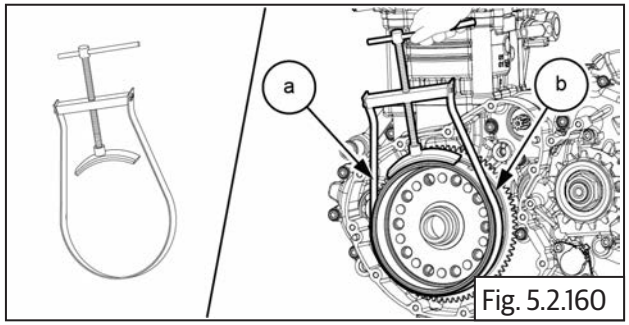

Fig. 5.2.160

SPL	Part No: ST32065/A
	Part Name: Magneto holder

- Hold the special tool **(b)** and tighten the magneto assembly **(a)** to be specify torque.

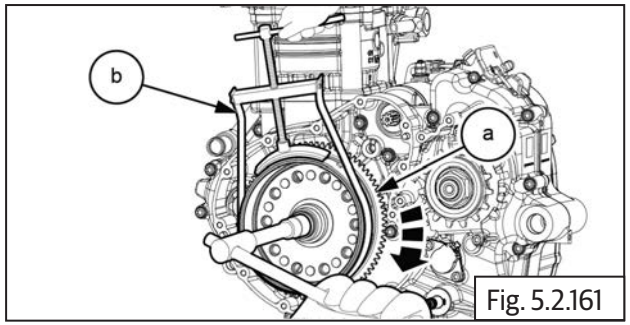

Fig. 5.2.161

	17mm Socket with ratchet
Torque	128 - 132 N-m/ 12.8 - 13.2 kgf-m

- Remove the special tool **(a)** from magneto rotor.

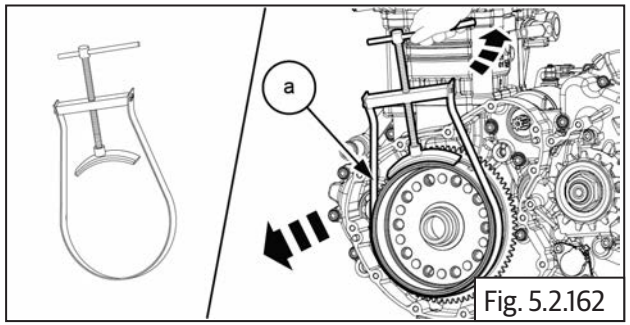

Fig. 5.2.162

SPL	Part No: ST32065/A
	Part Name: Magneto holder

- Insert the idler gear **(a)** on crankcase.

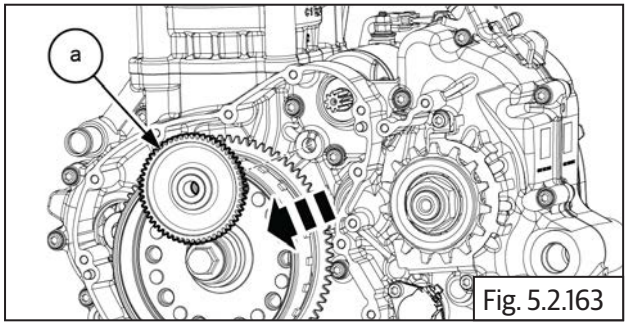

Fig. 5.2.163

- Install the idler shaft **(a)** into gear.

NOTE
• *Lubricate the* idler shaft before assemble.

	GL80W90

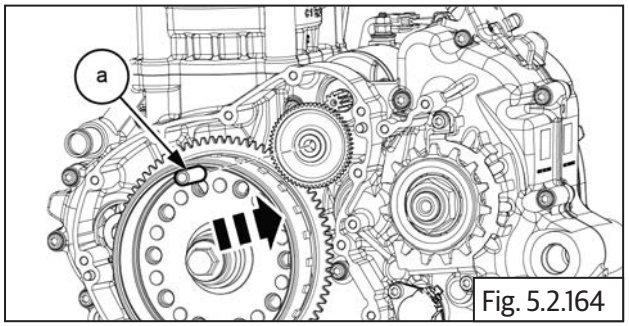

Fig. 5.2.164

5.5.22 Magneto Stator Assembly:

- Gently Install the magneto starter **(a)** into LH side cover assembly.

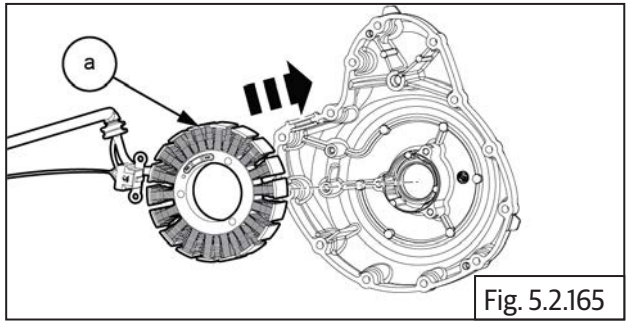

Fig. 5.2.165

- Locate and tighten 3 Nos. Hex socket head screws **(M6) (a)** on magneto starter mounting.

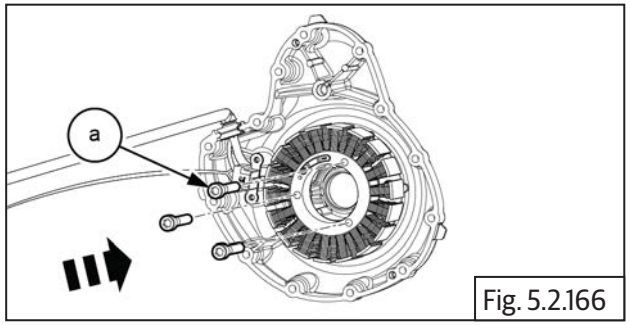

Fig. 5.2.166

	5 mm Allen Key with ratchet
Torque	11 N-m / 1.1 kgf-m

- Gently insert wiring grommet **(a)** into magneto cover.

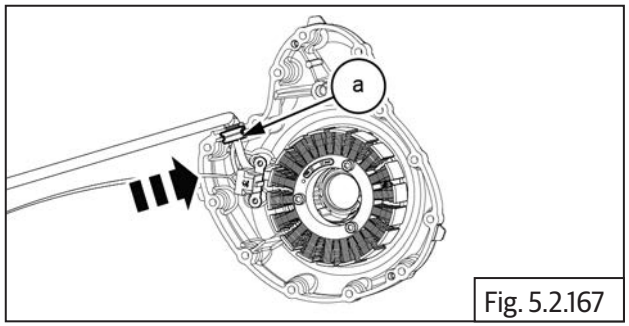

Fig. 5.2.167

	Loctite Superflex 24

NOTE
• **Apply the Loctite Superflex 24 to on cable grommet.**

- Locate and tighten 2 Nos. Hex socket head screws **(M5) (a)** on crank position sensor (CPS).

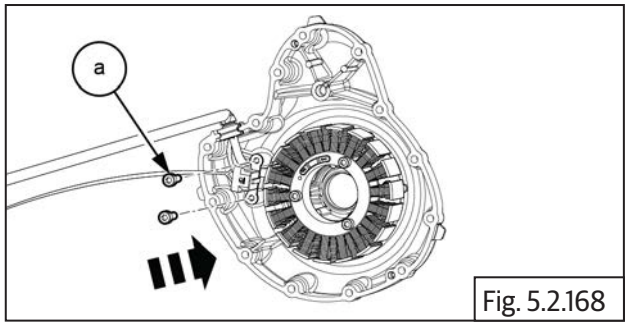

Fig. 5.2.168

	4 mm Allen Key with ratchet
Torque	9 N-m / 0.9 kgf-m

	Loctite 243

NOTE
• **Apply the** *Loctite 243* **on bolts.**

5.5.23 LH Cover Assembly:

- Install the dowel pins 2 Nos. **(a)** into LH side crankcase.

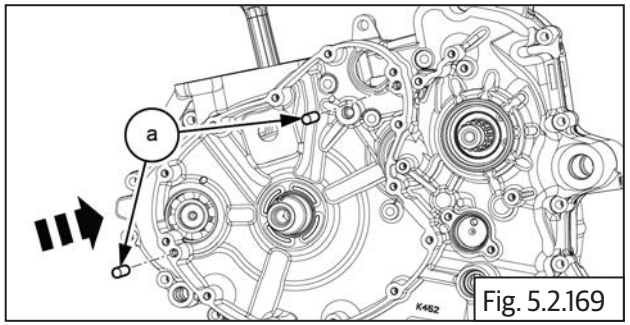

Fig. 5.2.169

- Gently install the LH side cover gasket **(a)** .

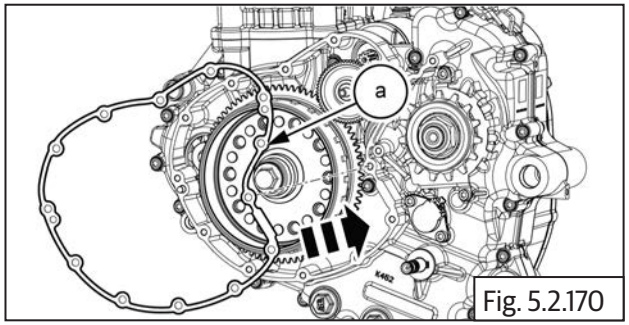

Fig. 5.2.170

NOTE
• Cover gasket *should be used one time only. DO NOT reuse.*

- Install LH side cover assembly **(a)**. on crankcase LH side.

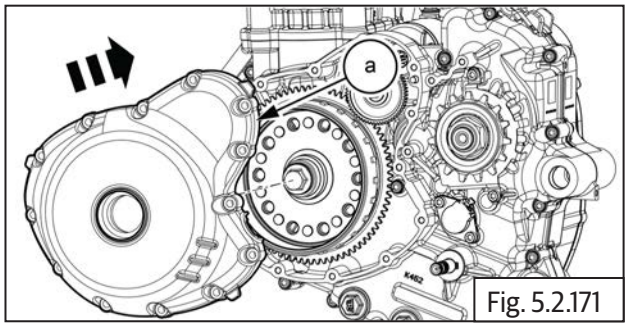

Fig. 5.2.171

- Locate and tighten 13 Nos. Hex socket head bolts **(M6) (a)** in crisscross pattern from LH side cover.

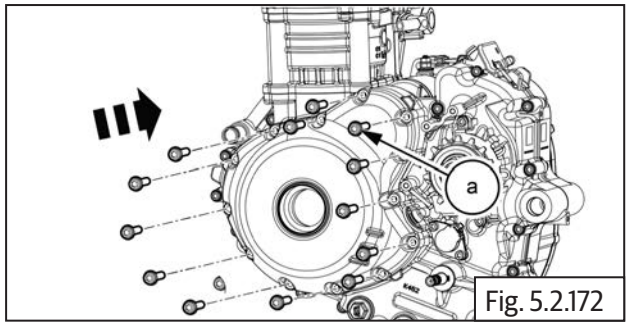

Fig. 5.2.172

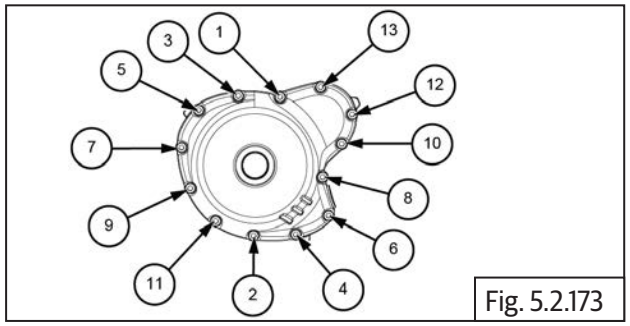

Fig. 5.2.173

	5 mm Allen Key with ratchet
Torque	11 N-m / 1.1 kgf-m

	Loctite Superflex 24

NOTE
• **Apply the Loctite Superflex 24 to on bolts.**

- Locate and tighten crankshaft timing plug **(M34) (a)** along with O ring **(b)** into LH side cover.

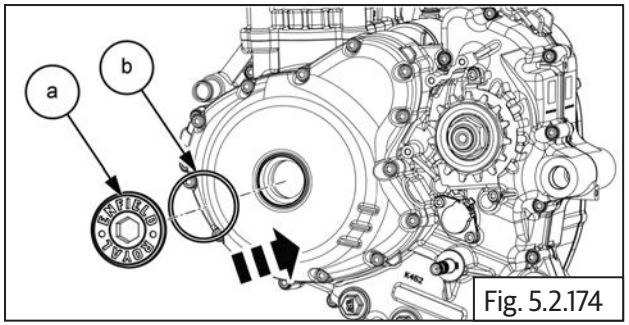

Fig. 5.2.174

	14 mm Allen Key with ratchet
Torque	20 N-m / 2.0 kgf-m

5.5.24 Oil Inspection Window Assembling:

- Gently install oil inspection window **(a)** into crankcase RH side cover.

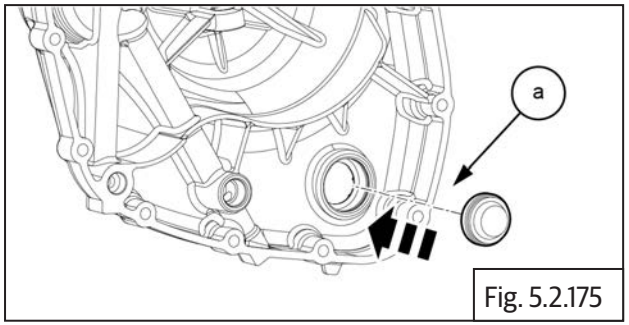

Fig. 5.2.175

	Loctite 243

NOTE
• **Apply the** *Loctite 243* **on oil window seating surface..**

- Install the circlip **(a)** on the oil level window inside clutch cover.

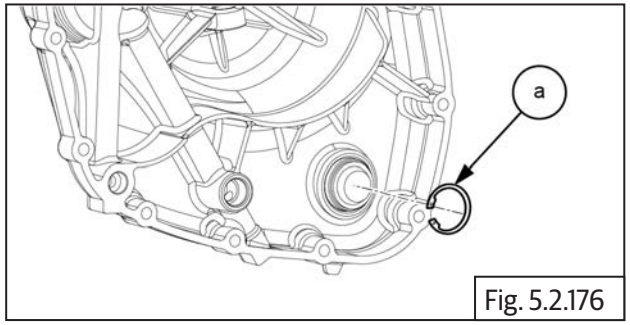

Fig. 5.2.176

NOTE
• *Do not reuse the circlip, Renew all circlips.*

	Circlip plier

5.5.25 Clutch Shifter shaft Assembling:

- Install the secondary needle roller bearing **(b)** in the clutch cover with using special tool **(a)**.
- Gently tap the bearing draft **(a)** using mallet to fix the bearing.

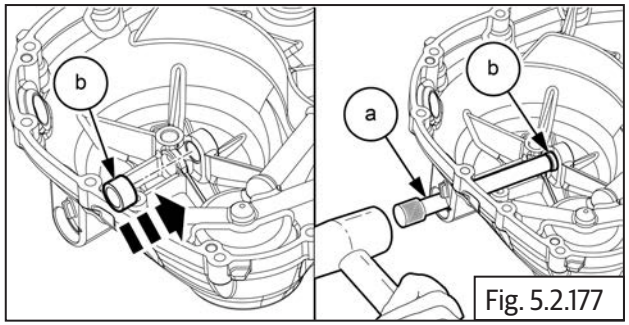

Fig. 5.2.177

SPL	Part No: ST30261/a
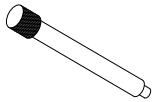	Part Name: Clutch Activating Lever Bottom Bearing Installer

- Install the Primary needle roller bearing **(a)** on the clutch cover with using special tool **(b)**.
- Gently tap the special tool **(b)** using mallet to fix the bearing.

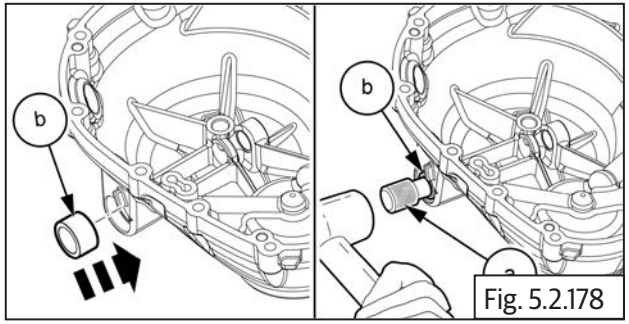

Fig. 5.2.178

SPL	Part No:ST30262/a
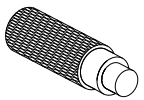	Part Name: Clutch Activating Lever Top Bearing Installer

- Install the oil seal **(b)** clutch cover with using special tool **(a)**.
- Gently tap the special tool **(a)** using mallet to fix the seal.

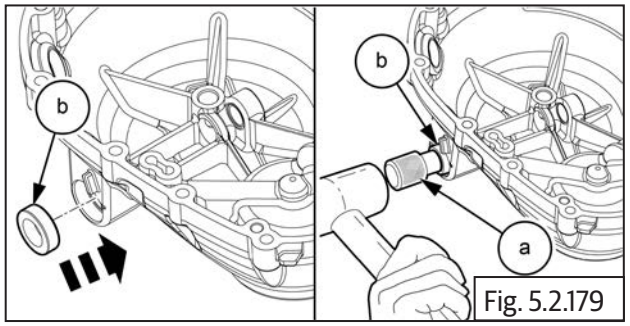

Fig. 5.2.179

SPL	Part No: ST30264/a
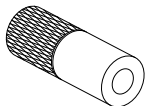	Part Name: Clutch Activating Shaft Oil Seal Installer

- Install the washer **(a)** and spring **(b)** into clutch actuating shaft **(c)**.

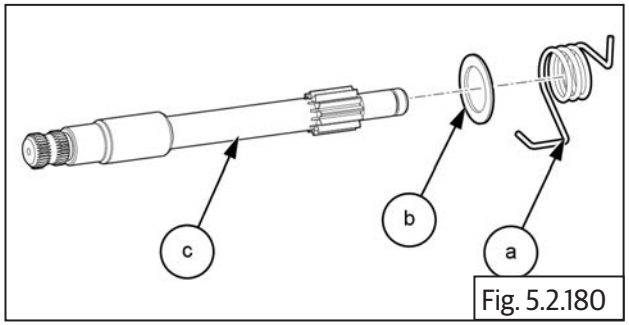

Fig. 5.2.180

- Gently insert clutch actuating shaft **(a)** into the clutch cover **(b)**.

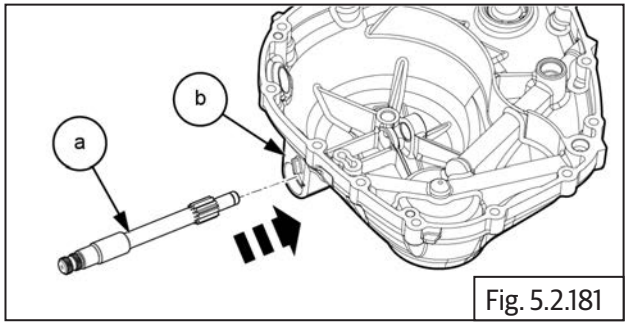

Fig. 5.2.181

- Gently install the washer **(b)** and E clip **(a)** into the bottom of the clutch actuating shaft inside clutch cover.

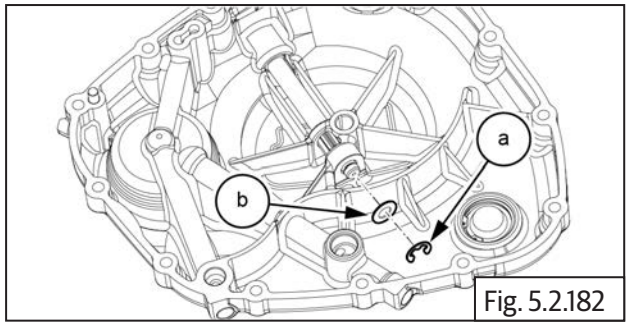

Fig. 5.2.182

	Nose plier

5.5.26 RH Side Cover Assembling:

- Locate the gasket **(a)** into the dowel pin.

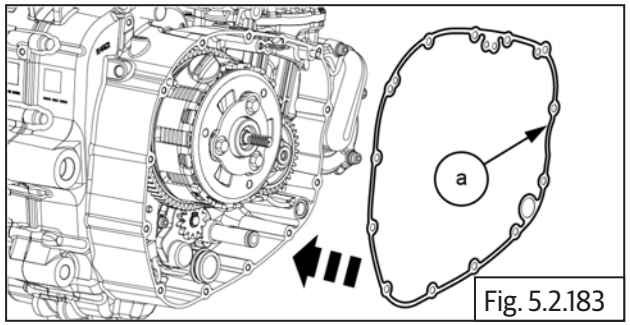

Fig. 5.2.183

NOTE
• Cover gasket *should be used one time only. DO NOT reuse.*

⚠ CAUTION
Keep pin clutch sleeve orientation as shown for ease of RH cover assembly.

- Gently locate the RH side cover **(a)** to with respective 2 dowel pins and ensure the proper fit ment.

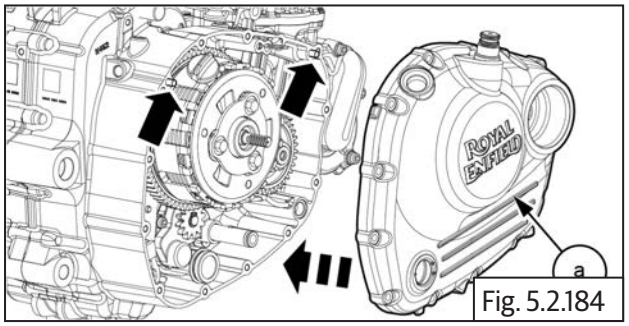

Fig. 5.2.184

- Locate and tighten 13 Nos. Hex socket head bolts **(M6) (a)** in crisscross pattern on RH side cover **(b)**.

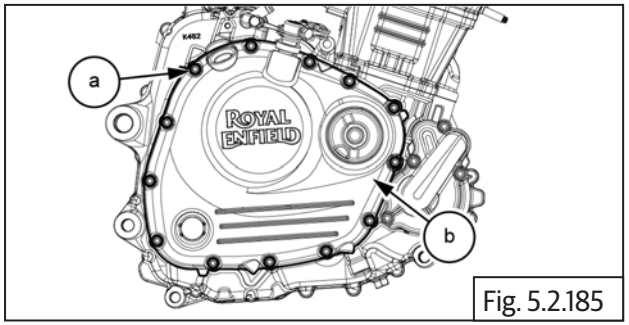

Fig. 5.2.185

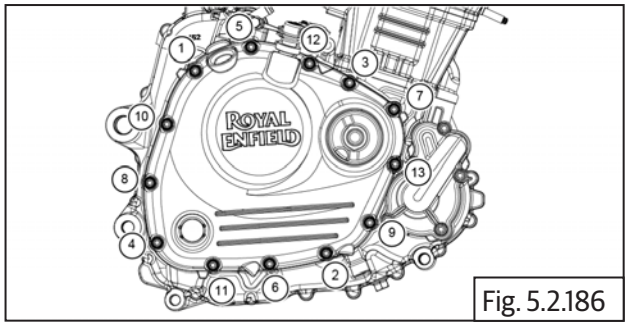

Fig. 5.2.186

	5 mm Allen Key with ratchet
Torque	11 N-m /1.1 kgf-m

5.5.27 Oil Filter Assembling:

- Install the oil filter **(a)** into RH side cover.

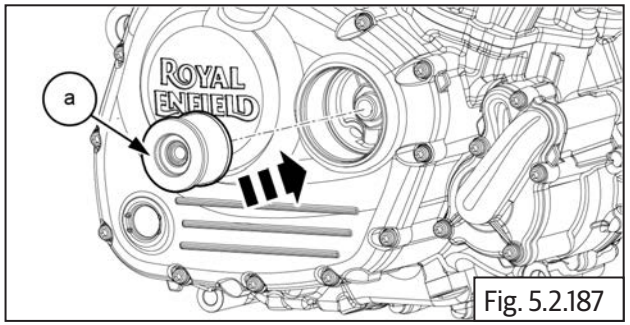

Fig. 5.2.187

NOTE
• *Lubricate O ring with tyre lube or P-80 emulsion.*

- Locate the spring **(a)**on the oil filter cap.

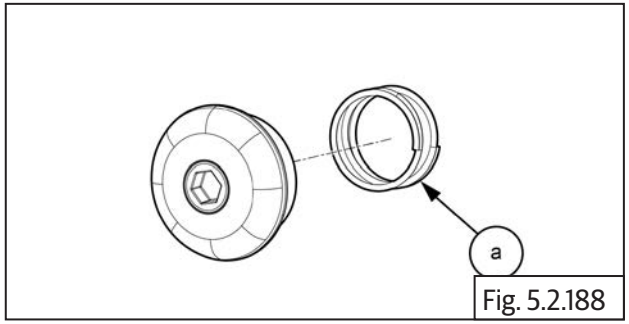

Fig. 5.2.188

- Locate and tighten the oil filter mounting cap **(a)** along with O-ring **(b)**. into RH side cover.

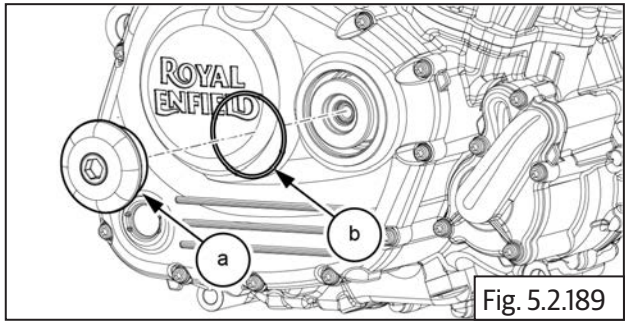

Fig. 5.2.189

	14 mm Allen Key with ratchet
Torque	22 N-m /2.2 kgf-m

5.5.28 Starter Motor Assembling:

- Gently locate the Starter motor **(a)** along with "O" ring into the LH crankcase.

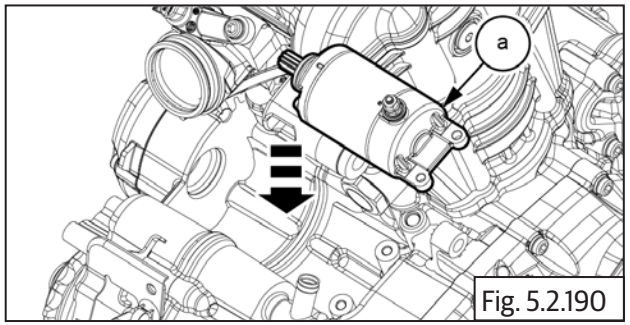

Fig. 5.2.190

- Locate and tighten 2 Nos. **(M6)** Starter Motor mounting bolts **(a)**.

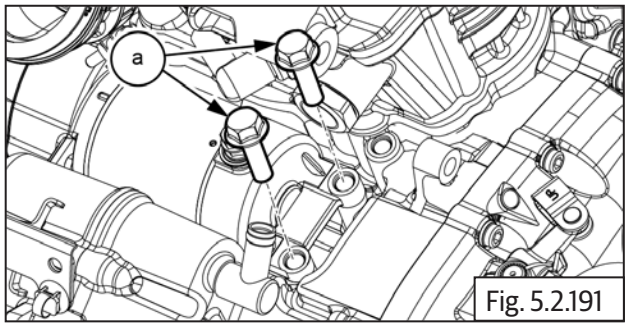

Fig. 5.2.191

	10 mm Socket with ratchet
Torque	9 N-m /0.9 kgf-m

5.5.29 Gear Position Sensor (GPS) Assembling:

NOTE
• *O ring to checked and replace if required.* • *Apply tire lube or silicone lube on O ring (all around 360).*

- Install Gear position sensor **(a)** from engine.

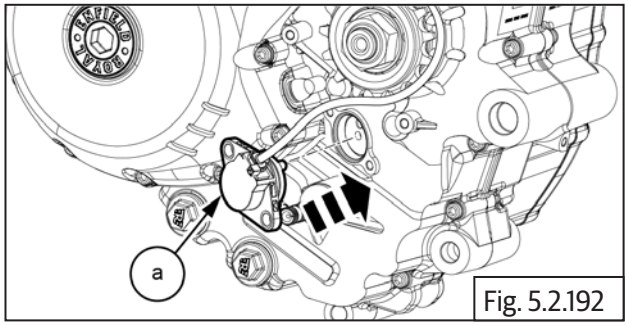

Fig. 5.2.192

- Locate and tighten 2 Nos. **(M6)** Gear position sensor mounting bolts **(a)**.
- Apply Loctite 243 around the bolt thread before the assembly.

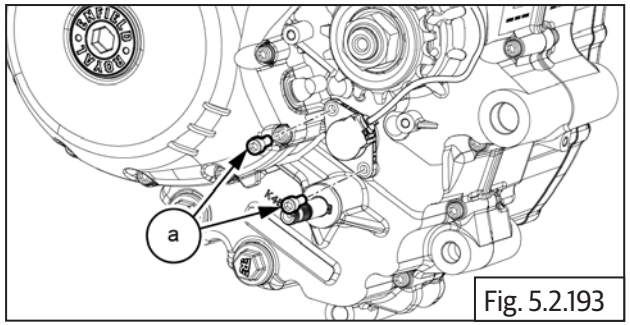

Fig. 5.2.193

	Loctite 243

	5 mm Allen Key with ratchet
Torque	9 N-m /0.9 kgf-m

- Install the cable guide bracket **(a)** .

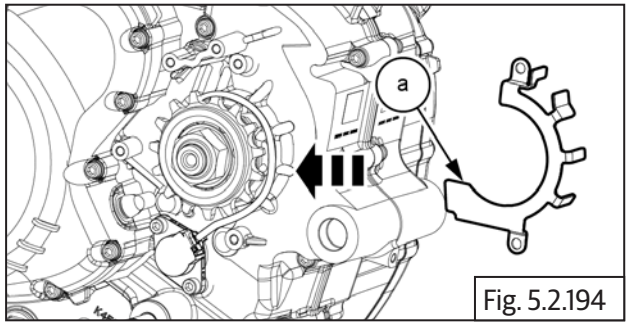

Fig. 5.2.194

- Locate and tighten 2 Nos. Hex socket head bolts **(M6) (a)** gear position sensor cable mounting.

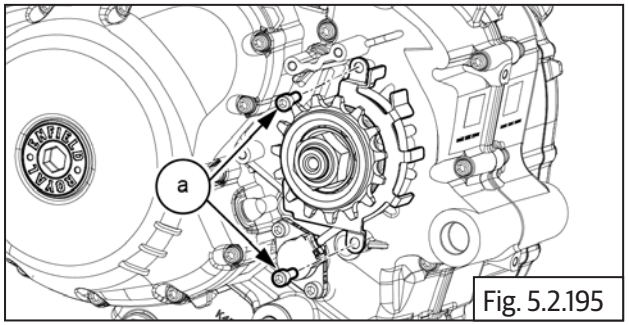

Fig. 5.2.195

	5 mm Allen Key with ratchet
Torque	9 N-m /0.9 kgf-m

- Install Cable mounting bracket **(a)** on the engine.

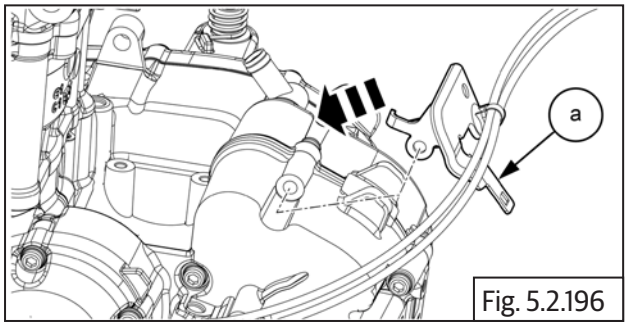

Fig. 5.2.196

- Locate and tighten 1 No **(M6)** Cable mounting bolt **(a)**.

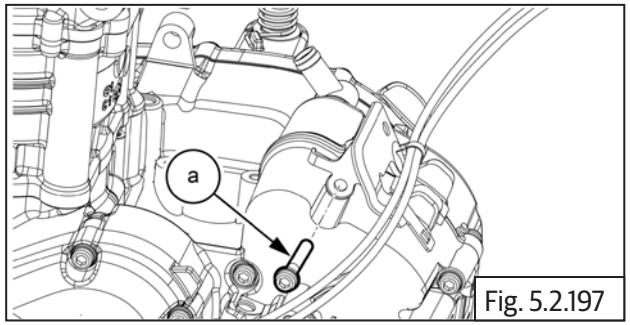

Fig. 5.2.197

	5 mm Allen Key with ratchet
Torque	11 N-m /1.1 kgf-m

5.5.30 Injector Assembling:

NOTE
• *Lubricate the* Injector 'O' ring **(a)** before assemble.

	GL80W90

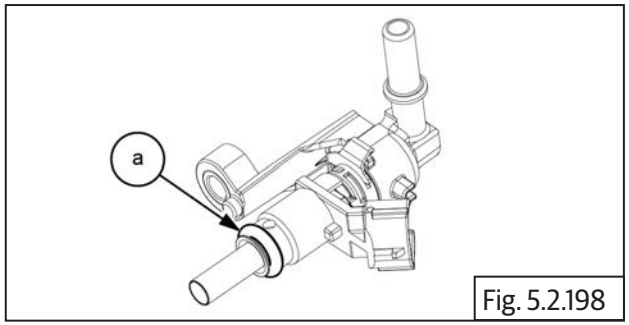

Fig. 5.2.198

- Gently locate the injector assembly **(a)**.

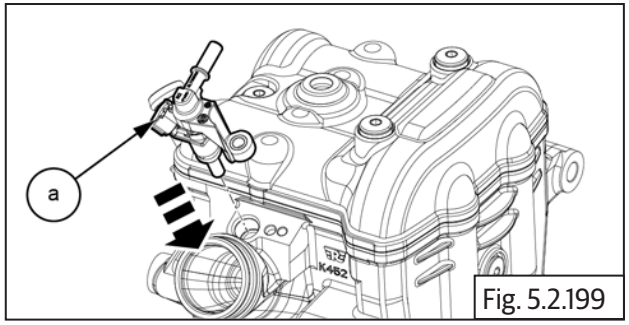

Fig. 5.2.199

- Locate and tighten 1 No **(M6)** injector mounting bolt **(a)**.

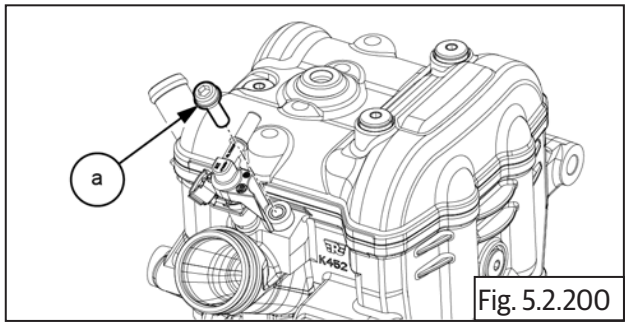

Fig. 5.2.200

	5 mm Allen Key with ratchet
Torque	11 N-m /1.1 kgf-m

5.5.31 Oil Pressure Switch Assembling:

- Locate and tighten the Oil pressure switch **(a)** along with washer **(b)**.
- Apply the Loctite 542 around the thread before assembling.

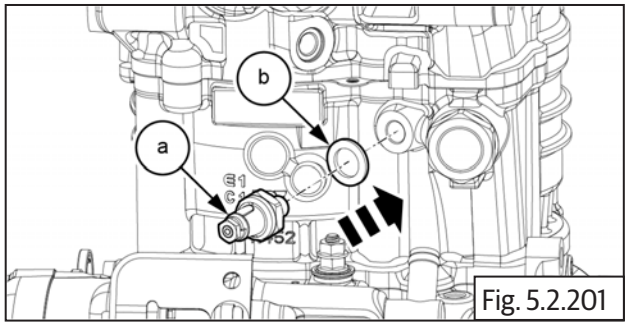

Fig. 5.2.201

	Loctite 542

	21 mm Socket with ratchet
Torque	9 N-m /0.9 kgf-m

5.5.32 Coolant Temperature Sensor Assembling:

- Install the O-ring **(a)** into coolant Temperature sensor.

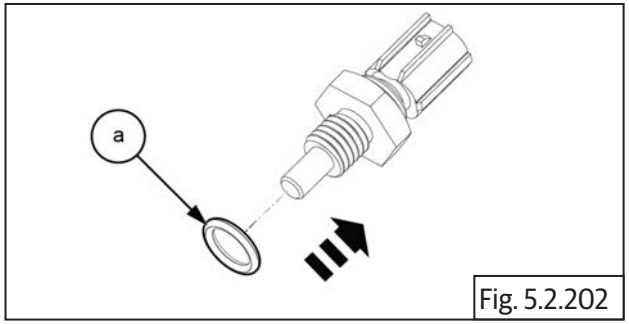

Fig. 5.2.202

- Locate and tighten the coolant Temperature sensor **(a)** along with o ring **(b)**.

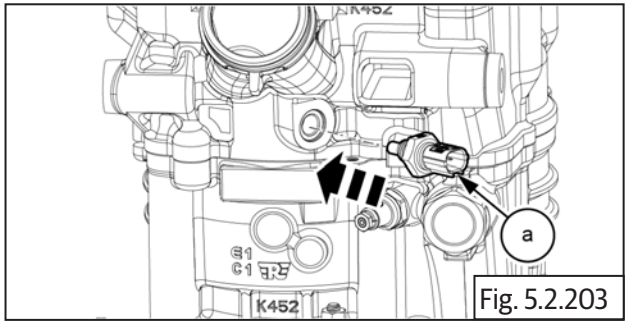

Fig. 5.2.203

	18 mm Long Socket with Ratchet
Torque	7.5 N-m /0.75 kgf-m

5.5.33 Thermostat Assembling:

- Install the Thermostat valve **(a)** into housing.

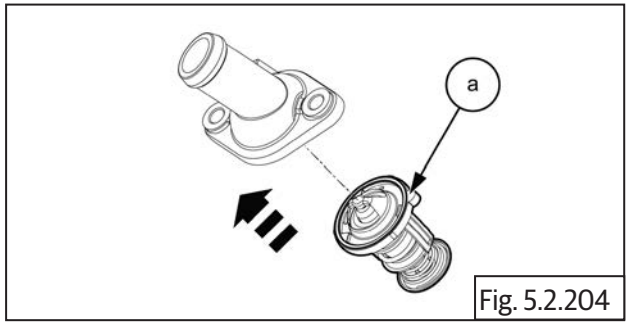

Fig. 5.2.204

- Install the Thermostat **(a)** into the engine.

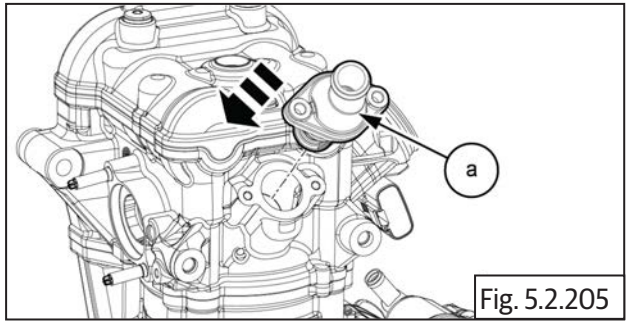

Fig. 5.2.205

- Locate and tighten 2 Nos. **(M6)** Thermostat mounting bolts **(a)**.

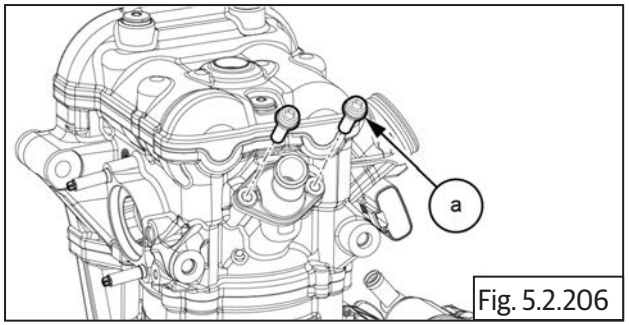

Fig. 5.2.206

	5 mm Allen Key with ratchet
Torque	11 N-m /1.1 kgf-m

5.5.34 Manifold clamp Assembling:

- Gently install the inlet manifold **(a)** into cylinder head.

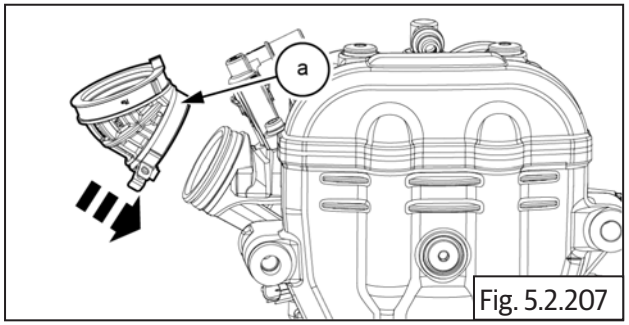

Fig. 5.2.207

- Locate and tighten the 4mm Allen bolt **(a)** into inlet manifold clamp .

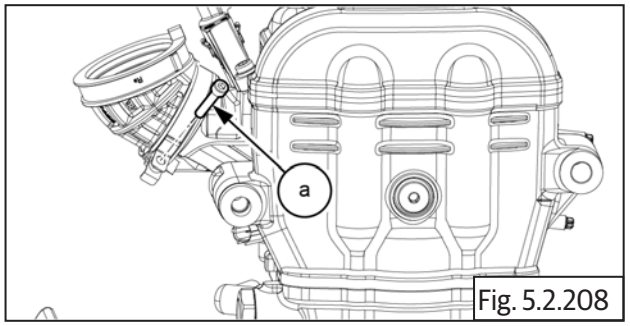

Fig. 5.2.208

	4 mm Allen Key with ratchet
Torque	2.5 N-m / 0.25 kgf-m

5.5.35 Oil Strainer Assembling:

- Gently install the 2 Nos. oil strainer **(a)** along with "O" ring **(b)** into engine.

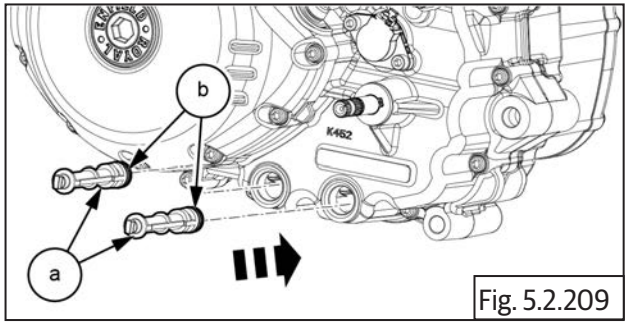

Fig. 5.2.209

- locate and tighten the 2 Nos. oil drain bolts **(a)** along with o rings **(b)** into engine.

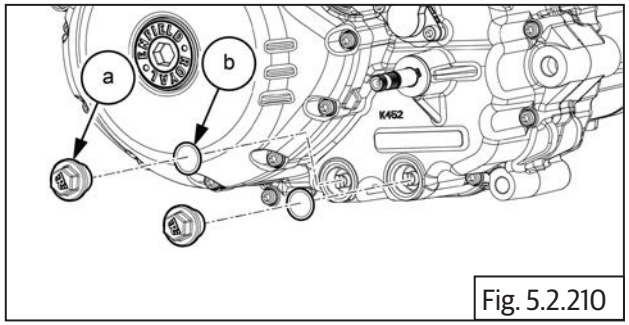

Fig. 5.2.210

	17 mm Socket with ratchet
Torque	13 N-m /1.3 kgf-m

5.5.36 Spark Plug Assembling:

- Install spark plug **(a)** into cylinder head.

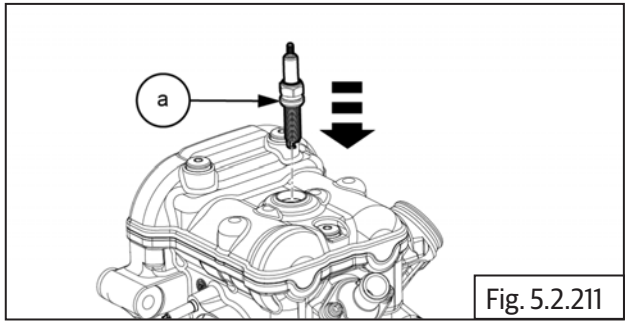

Fig. 5.2.211

- Tighten the spark plug **(a)** into cylinder head.

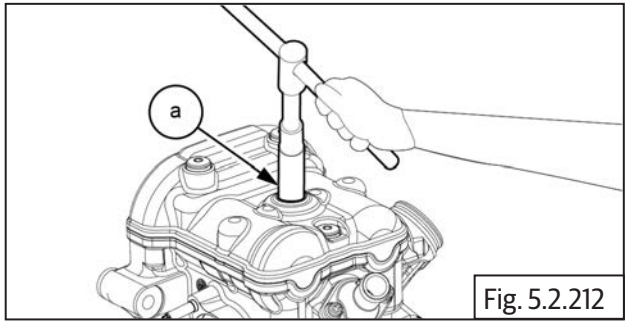

Fig. 5.2.212

	14 mm Long Socket with ratchet
Torque	11 N-m /1.1 kgf-m

ENGINE COOLING SYSTEM

CONTENTS PAGE

5.6 Engine Cooling System 140

5.6.1 Coolant Drain..... 143

Dismantling..... 144

5.6.2 Expansion tank..... 144

5.6.3 Radiator..... 145

5.6.4 Cooling fan..... 147

5.6.5 Radiator child pats..... 148

5.6.6 Thermostat..... 150

5.6.7 Water Pump..... 150

5.6.8 Engine Coolant Temperature Sensor..... 152

Inspection..... 152

Assembly..... 153

5.6.9 Engine Coolant Temperature Sensor..... 153

5.6.10 Water Pump..... 153

5.6.11 Thermostat..... 155

5.6.12 Radiator child part..... 156

5.6.13 Cooling fan..... 157

5.6.14 Radiator..... 159

5.5815 Expansion tank..... 160

5.5.16 Radiator coolant filling..... 161

5.6.17 Air Bleeding..... 163

5.6 Engine Cooling System

⚠ WARNING

Never open a radiator cap when the engine is hot.

The pressure released can make the coolant begin to boil and expand.

Boiling coolant could spurt out of the filler neck or reservoir, causing severe burns.

⚠ CAUTION

DO NOT perform any operation on cooling system soon after the motorcycle is OFF.

They can extremely hot and will cause serious injuries.

Wait until the engine temperature is the same as the outdoor temperature.

NOTE

- *Ensure the motorcycle is upright on a firm and flat surface.*

5.6.1 Coolant Drain

Prior Removal:

- Remove the fuel tank.
- Remove the LHS and RHS side panels.
- Open the radiator pressure cap **(a)**.

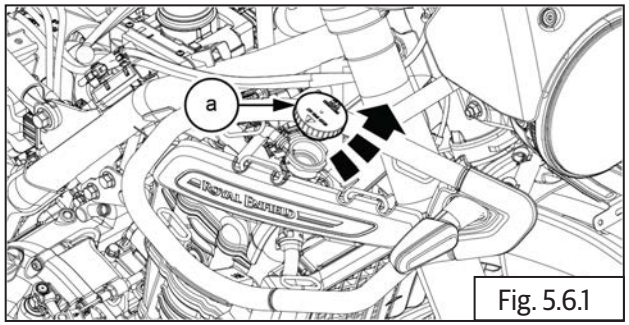

Fig. 5.6.1

- Open the expansion cap **(a)**.

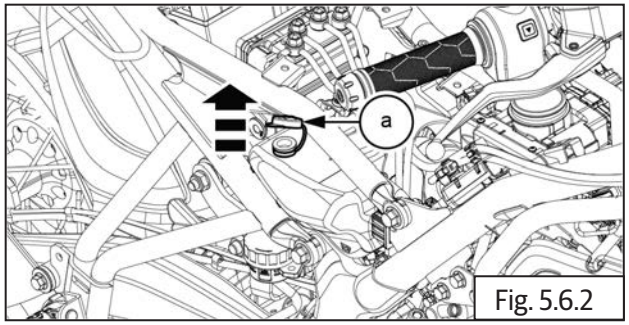

Fig. 5.6.2

- Place a tray under the engine, loosen and remove coolant drain bolt **(M6) (a)** along with copper washer **(b)** from the RHS water pump cover.

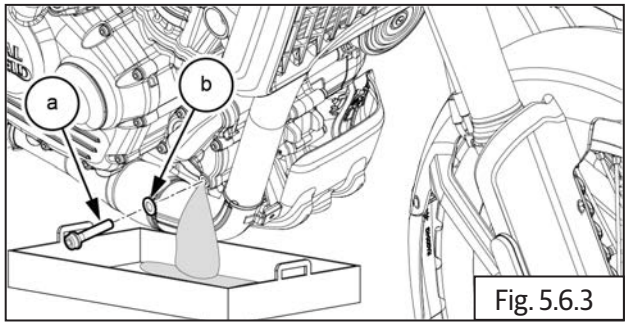

Fig. 5.6.3

	5mm Allen key

- Remove the clip **(a)** from radiator top.

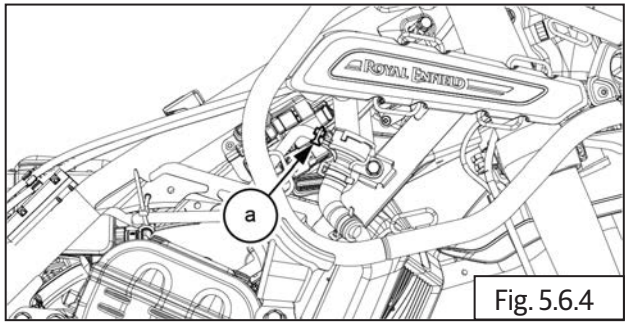

Fig. 5.6.4

	Plier

- Detach the 1 Nos tag **(a)** from hose.

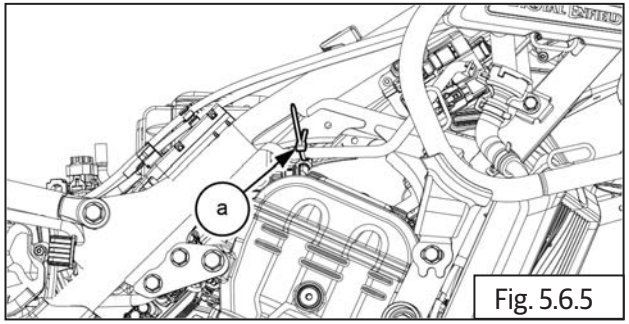

Fig. 5.6.5

	Cutter

- Place a tray under the expansion tank hose **(a)** and drain the coolant from expansion tank.

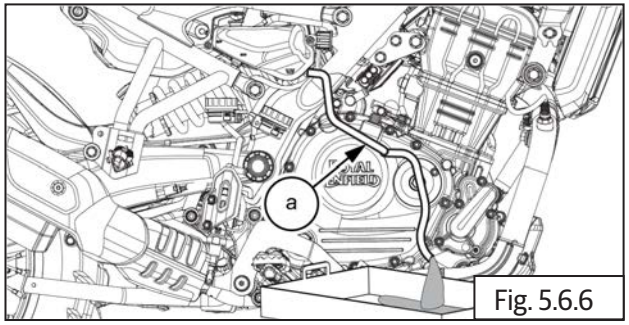

Fig. 5.6.6

⚠ WARNING

DO NOT spill coolant. Collect coolant in a separate container and dispose it through authorized disposal agencies in your locality. Avoid skin OR body contact with the coolant. Promptly wash affected area with soap and water.

Dismantling

5.6.2 Expansion tank

- Loosen and remove 2 Nos screws **(a)** from expansion tank.

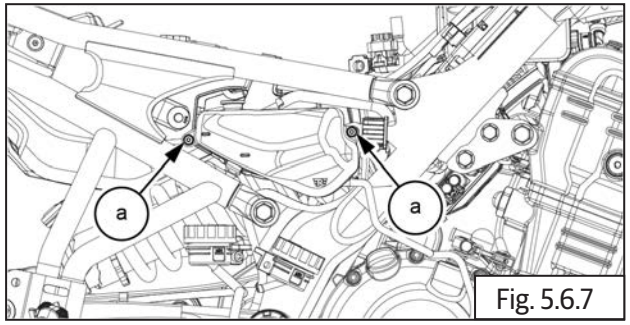

Fig. 5.6.7

	T 20 Torx

- Remove expansion tank with hoses **(a)** from chassis frame.

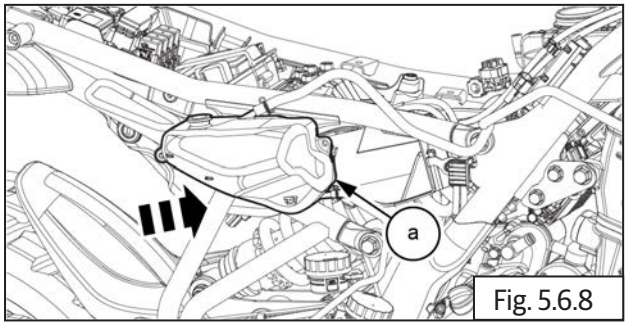

Fig. 5.6.8

- Remove the 2Nos clips **(a)** from over flow hose and main hose.

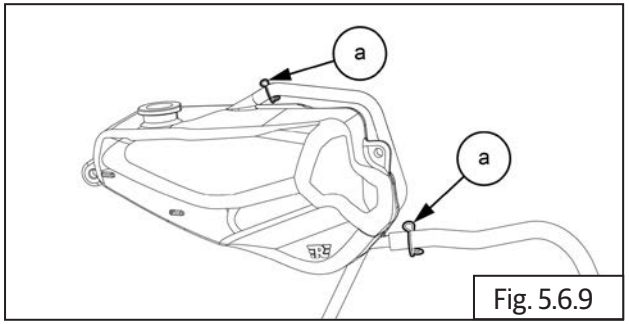

Fig. 5.6.9

	Plier

- Pull and remove the over flow hose **(a)** and main hose **(a)** from expansion tank.

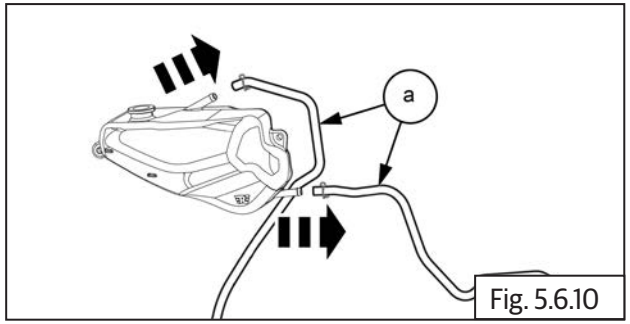

Fig. 5.6.10

5.6.3 Radiator

- Disconnect the cooling fan coupler **(a)**.

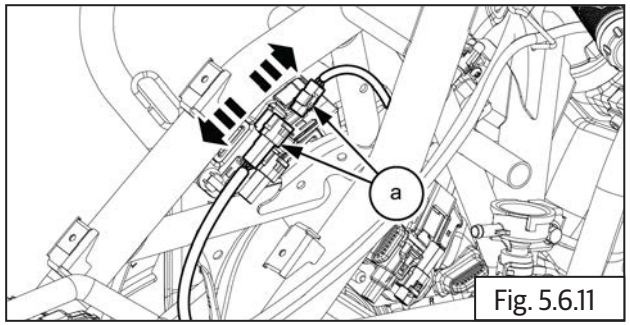

Fig. 5.6.11

- Remove the 1 Nos bolt **(M6) (a)** from filler neck.

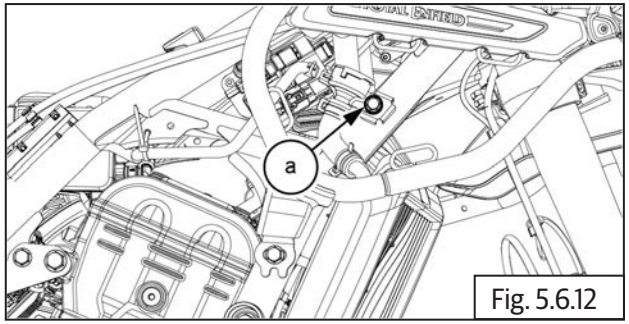

Fig. 5.6.12

	10 mm Socket with Ratchet

- Remove the 1 Nos clamps **(a)** from hose.

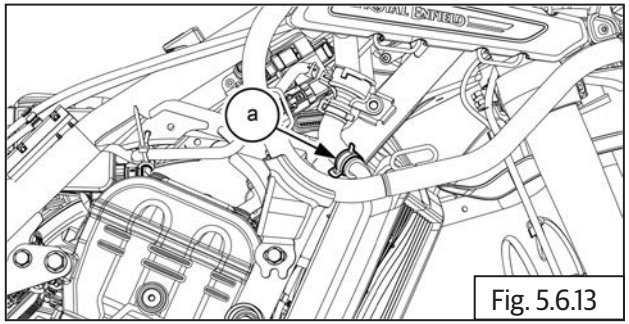

Fig. 5.6.13

	Plier

- Remove the hose with filler **(a)** from radiator.

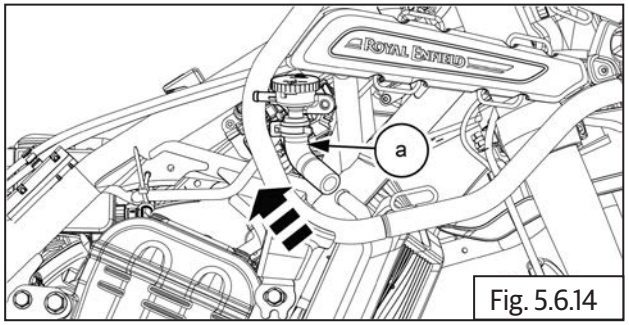

Fig. 5.6.14

- Remove the clamp **(a)** from engine inlet hose.

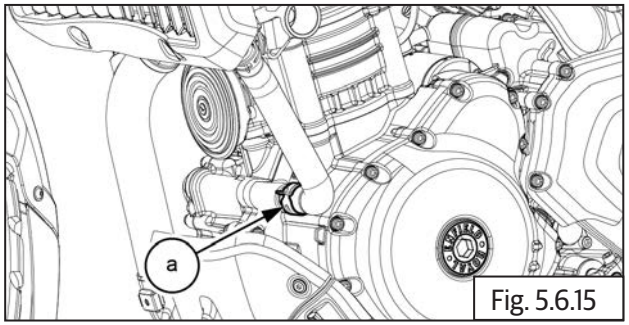

Fig. 5.6.15

	Plier

- Pull and remove the hose **(a)** from engine.

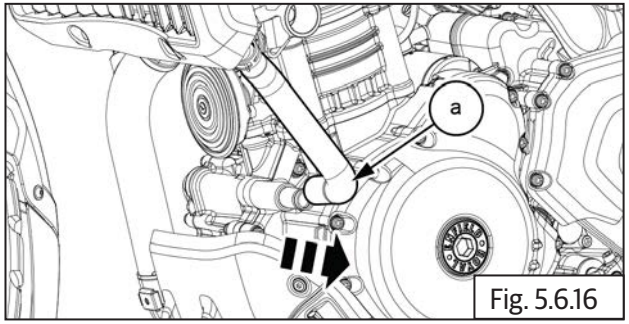

Fig. 5.6.16

- Remove the clamp **(a)** from engine outlet hose.

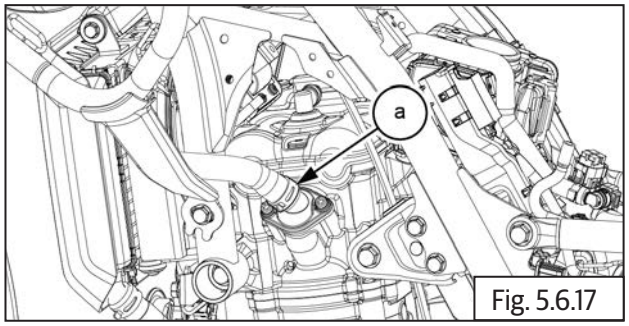

Fig. 5.6.17

	Plier

- Pull and remove the hose **(a)** from thermostat housing.

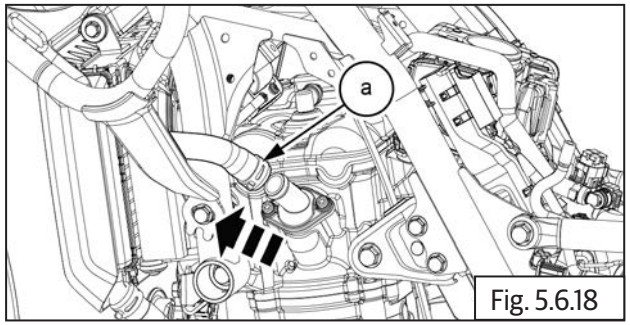

Fig. 5.6.18

- Remove the 3 Nos bolts **(M6) (a)** from radiator guard.

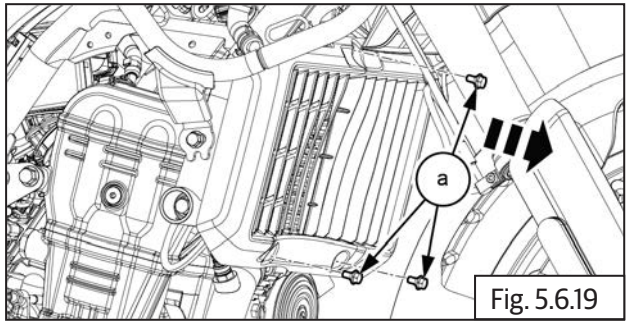

Fig. 5.6.19

	10 mm Socket with Ratchet

- Remove the guard **(a)** from radiator.

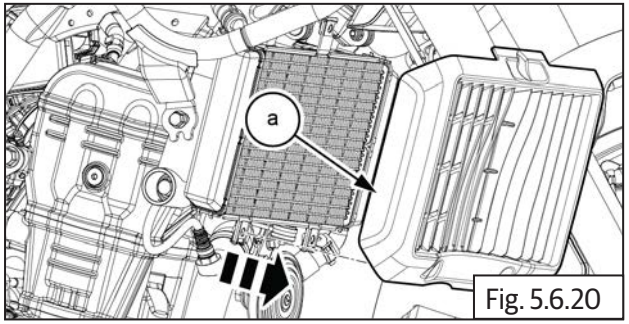

Fig. 5.6.20

- Remove the 1 Nos bolts **(M6) (a)** from bottom of the radiator.

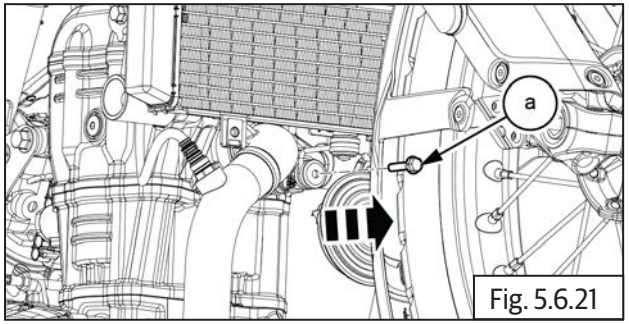

Fig. 5.6.21

	10 mm Socket with Ratchet

- Remove the 1 Nos bolts **(M6) (a)** from top of the radiator.

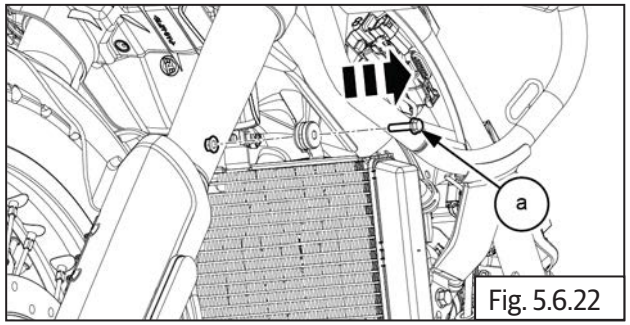

Fig. 5.6.22

	10 mm Socket with Ratchet

- Remove the radiator with hoses **(a)** from engine.

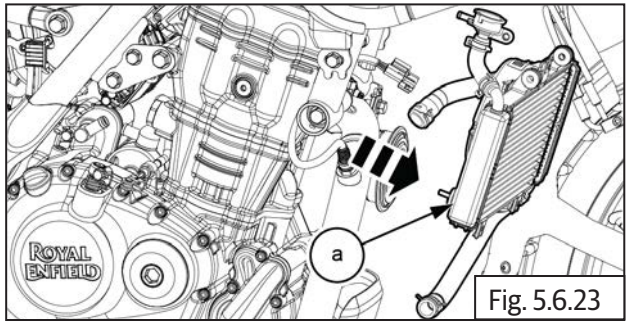

Fig. 5.6.23

5.6.4 Cooling fan

- Remove the 3 Nos nuts **(M6) (a)** from cooling fan.

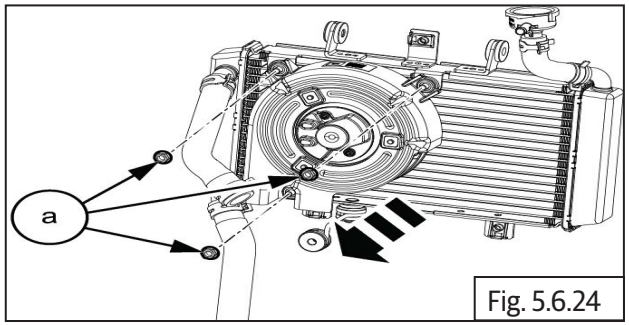

Fig. 5.6.24

	10 mm Socket with Ratchet

- Remove cooling fan **(a)** from radiator.

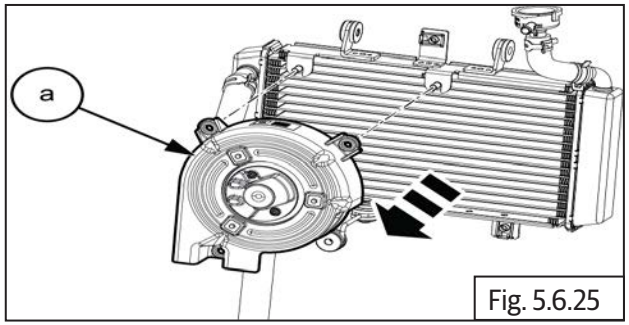

Fig. 5.6.25

- Remove the 1 Nos nuts **(M4) (a)** from fan.

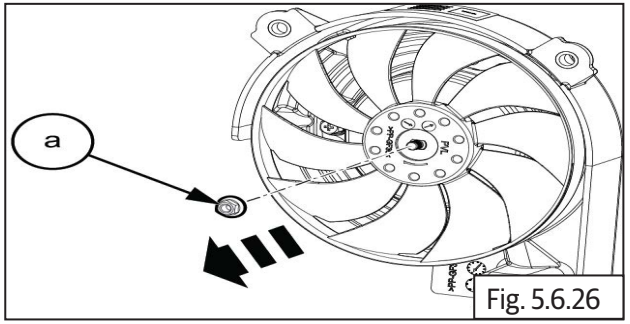

Fig. 5.6.26

	8 mm Socket with Ratchet

- Remove fan **(a)** from motor.

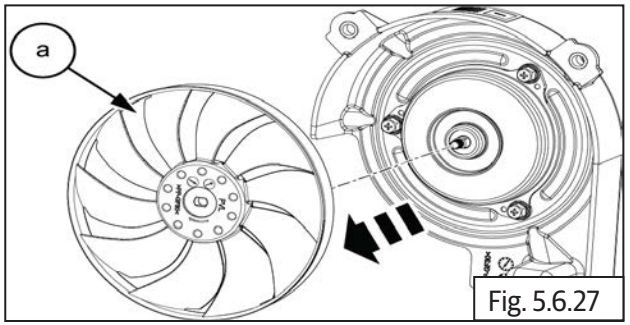

Fig. 5.6.27

- Mark the motor position **(a)** before removal.

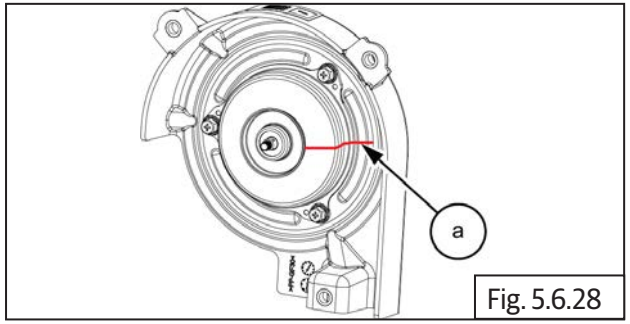

Fig. 5.6.28

- Remove the 3 Nos bolts **(M4) (a)** from motor.

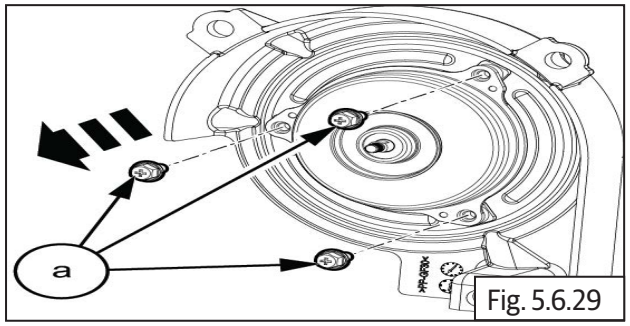

Fig. 5.6.29

	8 mm Socket with Ratchet

- Remove motor **(a)** from cowl.

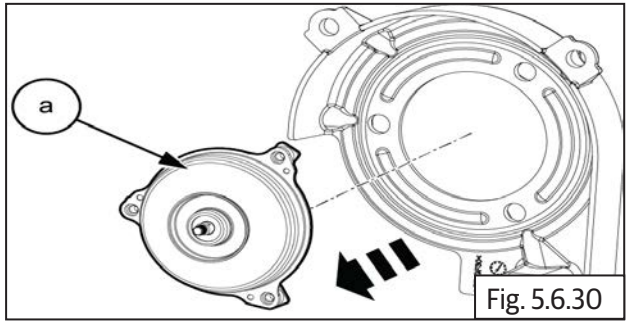

Fig. 5.6.30

5.6.5 Radiator child parts

- Remove the 3 Nos nut clips **(a)** from radiator.

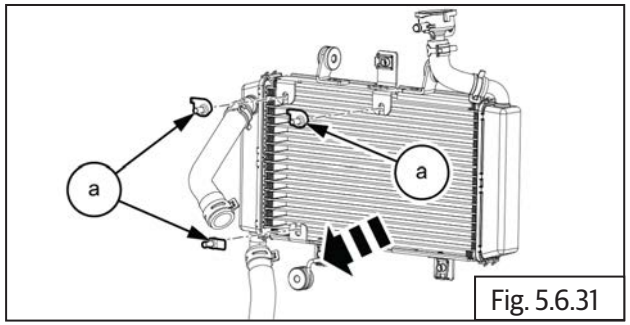

Fig. 5.6.31

- Remove the "E" clip **(a)** from bottom radiator.

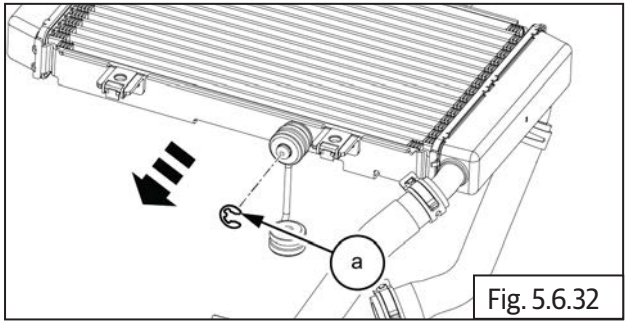

Fig. 5.6.32

	Nose plier

- Remove washer **(a)** from bottom radiator .

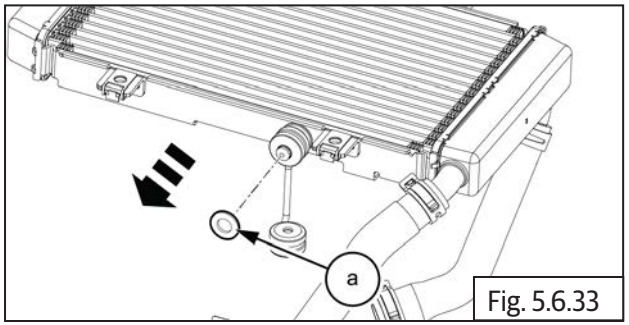

Fig. 5.6.33

- Remove bracket with grommet **(a)** from bottom radiator.

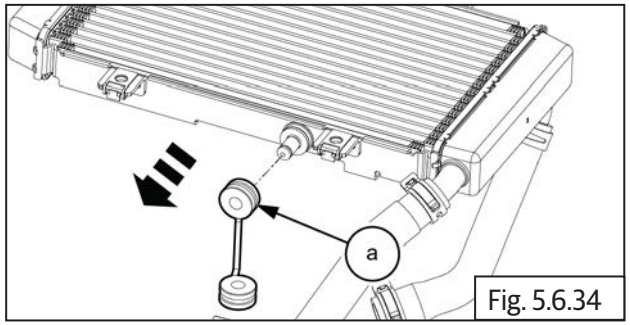

Fig. 5.6.34

- Remove 1 Nos hat washer **(a)** and 2 Nos grommets **(b)** from top radiator.

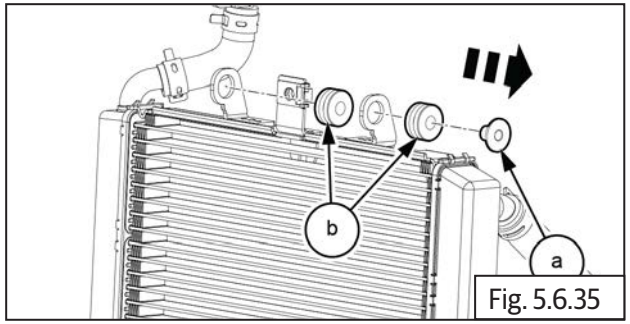

Fig. 5.6.35

- Remove the clamp **(a)** from top hose.

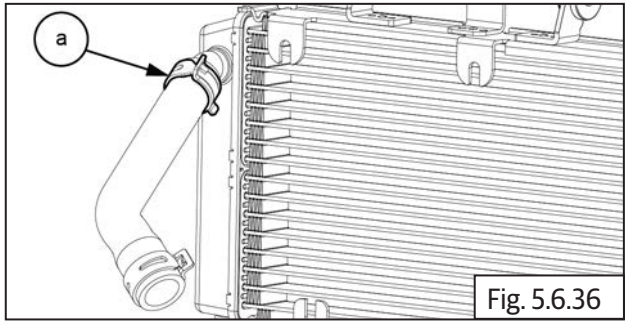

Fig. 5.6.36

	Plier

- Pull and remove the top hose **(a)** from radiator.

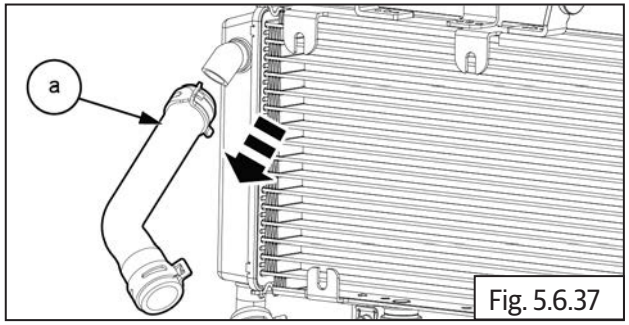

Fig. 5.6.37

- Remove the clamp **(a)** from bottom hose.

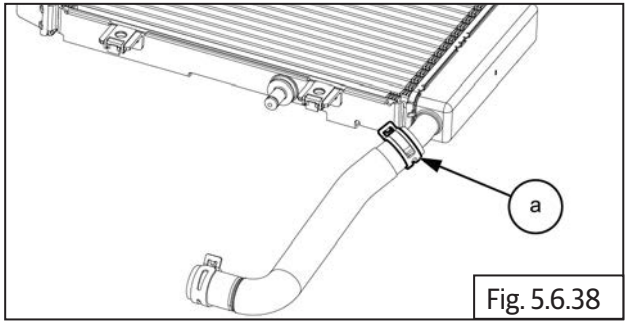

Fig. 5.6.38

	Plier

- Pull and remove the bottom hose **(a)** from radiator.

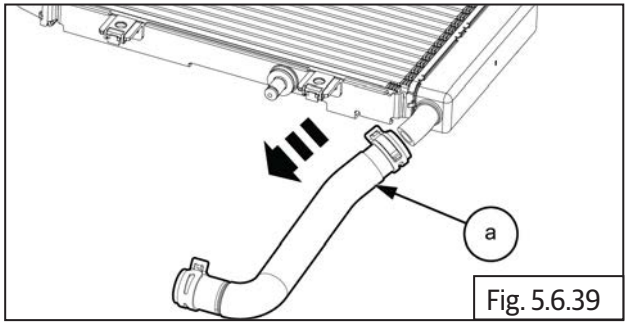

Fig. 5.6.39

- Remove the 1 Nos clamps **(a)** from filler neck.

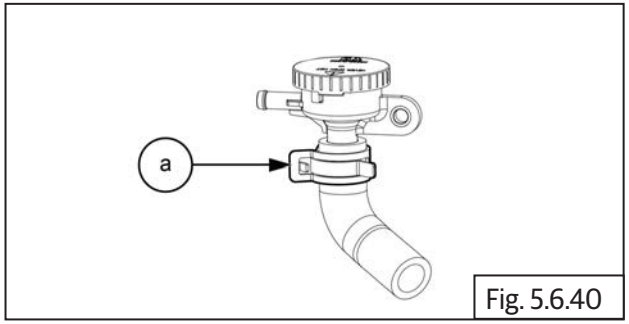

Fig. 5.6.40

	Plier

- Remove the filler neck from hose **(a)**.

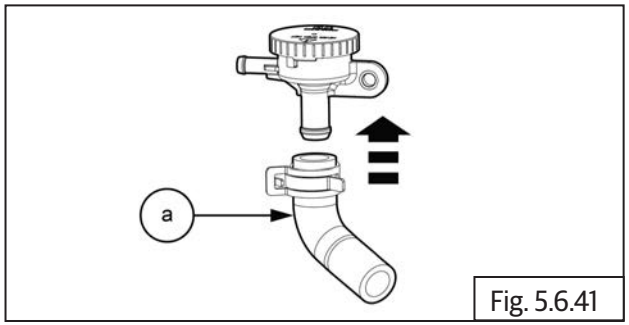

Fig. 5.6.41

5.6.6 THERMOSTAT

- Remove the 2 Nos cap bolts **(a)** from thermostat housing.

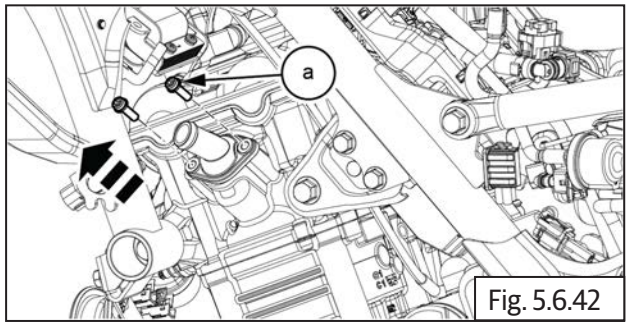

Fig. 5.6.42

	5mm Allen key

- Remove thermostat with housing **(a)** from engine.

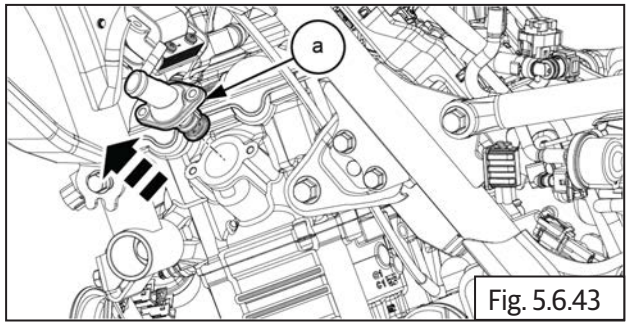

Fig. 5.6.43

- Separate the thermostat **(a)** from housing.

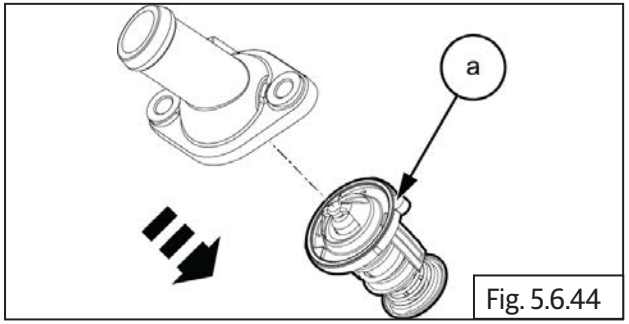

Fig. 5.6.44

5.6.7 Water Pump

- Loosen and remove 5 Nos cap bolts **(M6) (a)** from water pump.

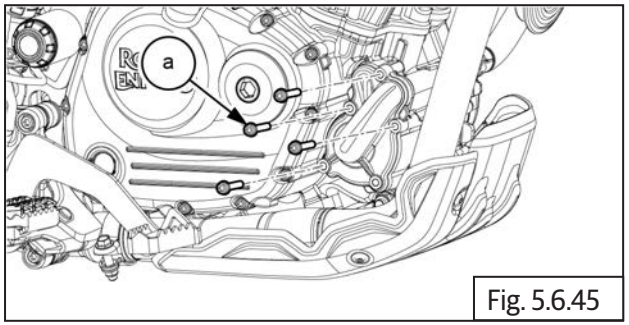

Fig. 5.6.45

	5mm Allen key

- Remove water pump cover with gasket **(a)**.

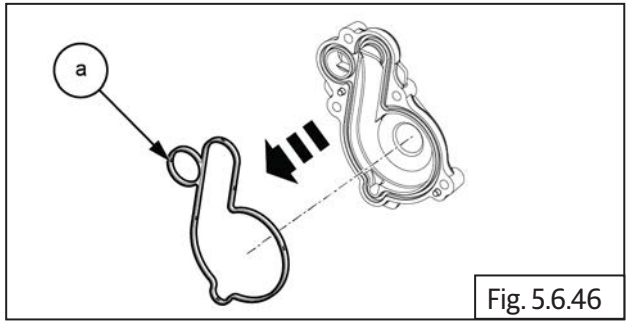

Fig. 5.6.46

- Loosen and remove 1 Nos cap bolt **(M5) (a)** with washer **(b)** from impeller.

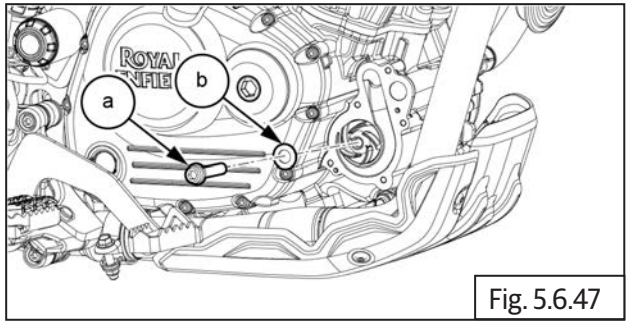

Fig. 5.6.47

	4mm Allen key

- Remove impeller **(a)** from water pump drive shaft.

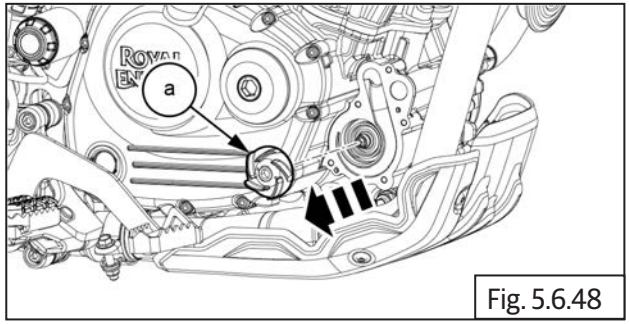

Fig. 5.6.48

- Remove the lip seal **(a)** using screw driver.

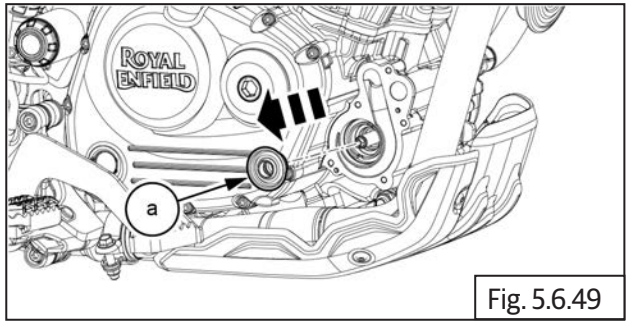

Fig. 5.6.49

NOTE
• *Should not be reuse the lip seal.*

5.6.8 Engine Coolant Temperature Sensor

- Coolant temperature sensor located on rear side of cylinder head.
- Remove coolant temperature sensor coupler **(a)**.

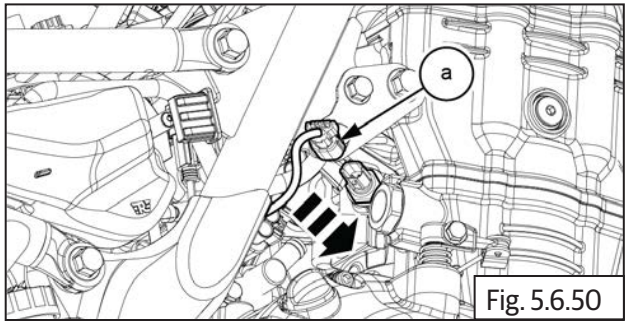

Fig. 5.6.50

- Remove coolant temperature sensor **(a)**.

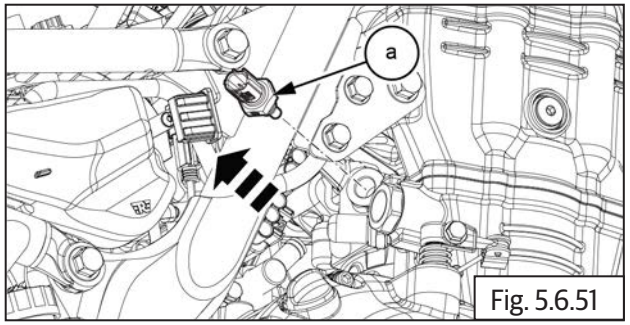

Fig. 5.6.51

	18mm Long Socket With Ratchet

- Remove "O" ring **(a)** from temperature sensor.

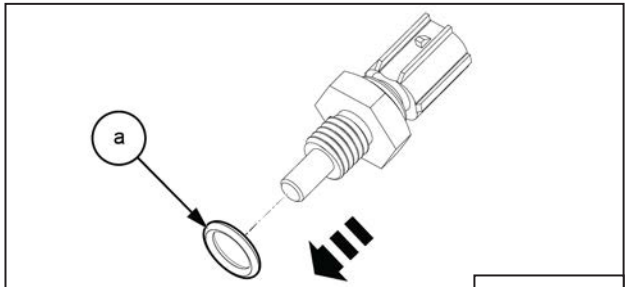

Fig. 5.6.52

Inspection

Thermostat

- Place the thermostat in a container of water and raise the temperature to **95 ºC** . if the thermostat fails to open when hot, or close properly when cooled, if must be replaced.

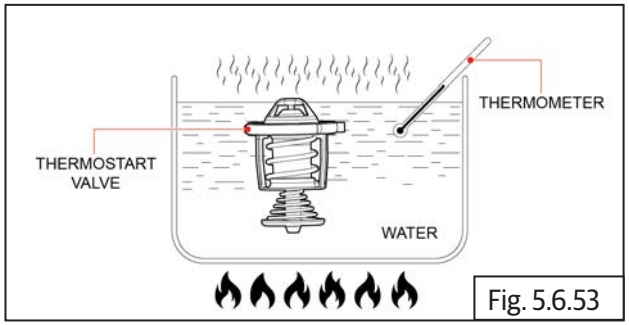

Fig. 5.6.53

Fan and thermostat valve operating stage

- The thermostat valve opens partially when the engine temperature reaches **82º C ± 2º C.**
- The thermostat valve opens fully when the engine temperature reaches **95º C**.
- The fan motor starts when the engine temperature reaches **103º C**.
- The fan motor stops when the engine temperature drops to **97º C**.

Radiator Hoses

- Hoses should be replaced at any time if found in less than perfect condition, regardless of age. Hoses should be replaced if a visual inspection reveals any hardness, leaks, cracks, swelling, chafing, or other damage.

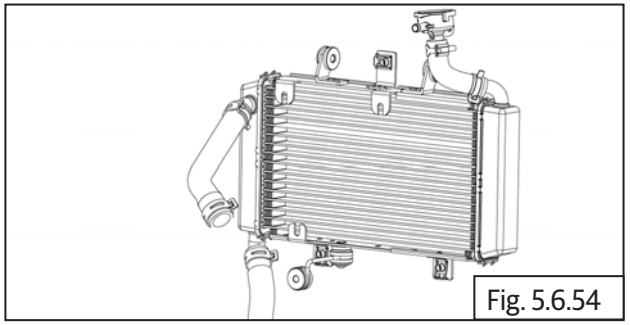

Fig. 5.6.54

Lip seal

- If there is a leakage of water or oil in the bottom of the hole, the water pump lip seal or the water pump drive shaft oil seal should be replace.

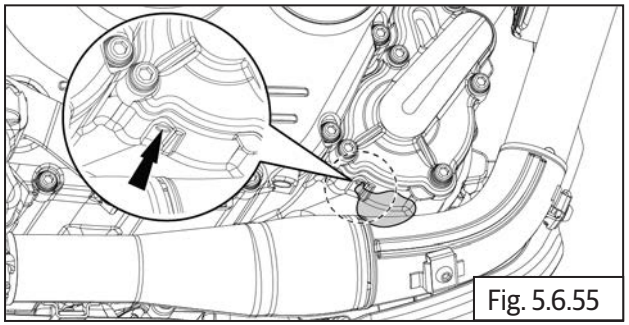

Fig. 5.6.55

Assembly

5.6.9 Engine Coolant Temperature Sensor

NOTE
• *Should not be reuse the* "O" ring *.*

- Install "O" ring **(a)** on the temperature sensor.

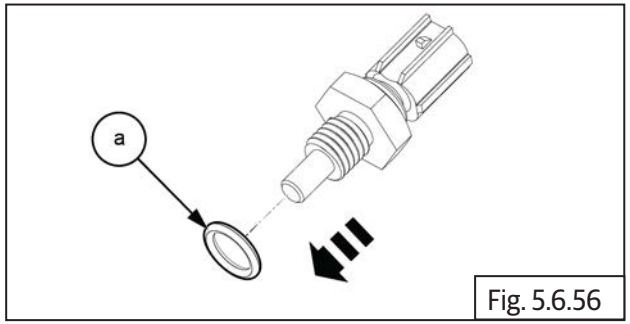

Fig. 5.6.56

- Locate and tighten the temperature sensor **(a)**.

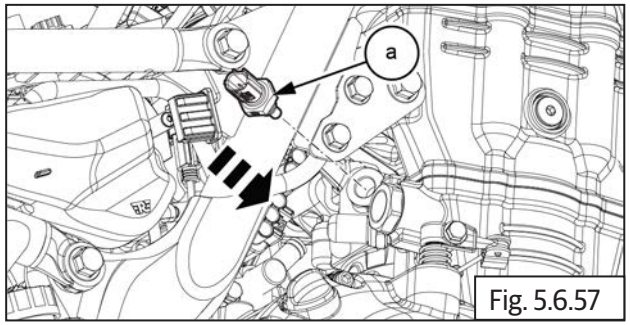

Fig. 5.6.57

	18mm Long Socket With Ratchet
Torque	6.5-8.5 N-m / 0.6-8.6 kgf-m

- Connect coolant temperature sensor coupler **(a)**.

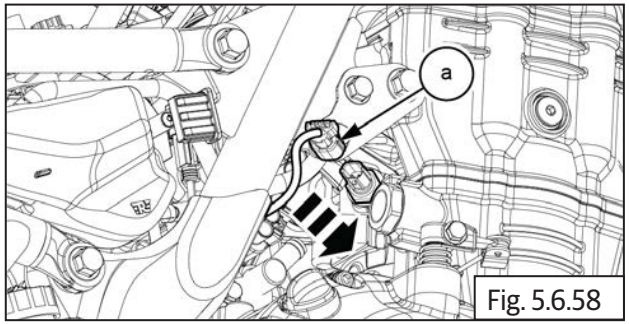

Fig. 5.6.58

5.6.10 Water Pump

NOTE
• *Should not be reuse the lip seal.*

- Locate the lip seal **(a)** on water pump drive shaft.

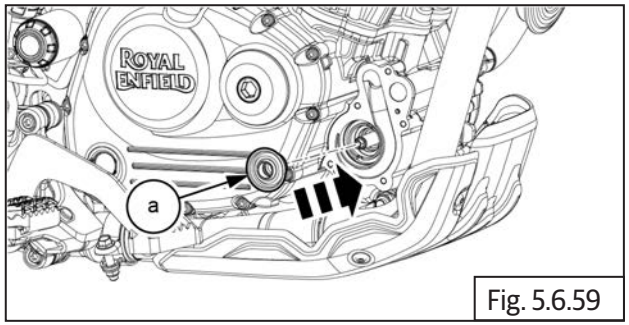

Fig. 5.6.59

- Locate and tighten 4 Nos hex bolts **(M6)** on special tool **(a)**.

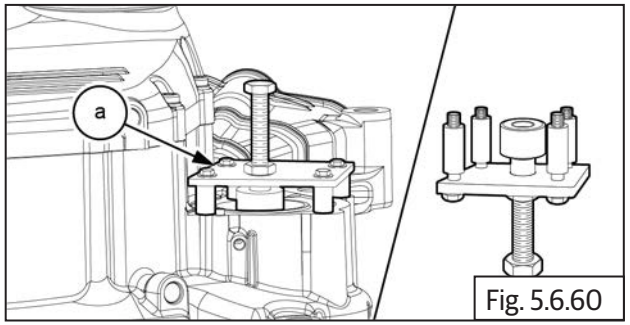

Fig. 5.6.60

SPL	
	Part No: ST-32068-a
	Part Name: Coolant Pump Oil Seal Assembly Tool

	10mm Socket With Ratchet

⚠ CAUTION
• *Do not damage the water pump seating surface while install the seal.*

- Tighten the special tool top bolt **(a)** until lip seal to proper seat.

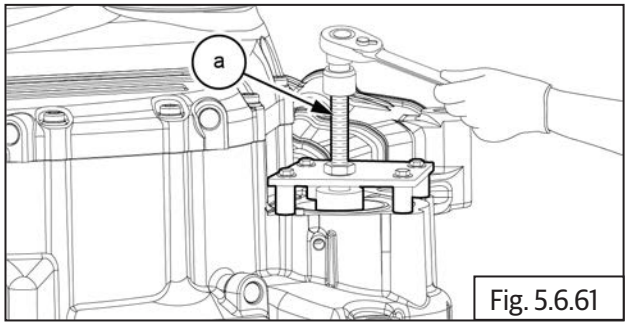

Fig. 5.6.61

	27 mm Socket With Ratchet.

- Remove the special tool **(a)** from water pump drive shaft.

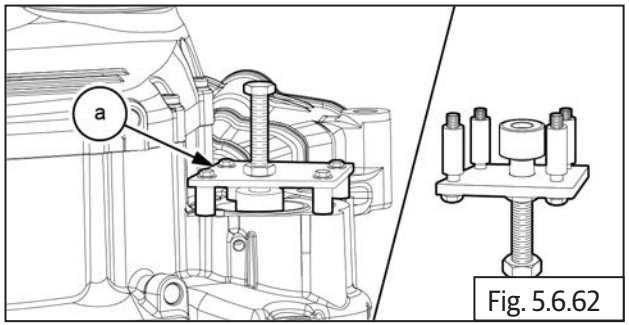

Fig. 5.6.62

	10mm Socket With Ratchet

- Locate the impeller **(a)** into water pump drive shaft.

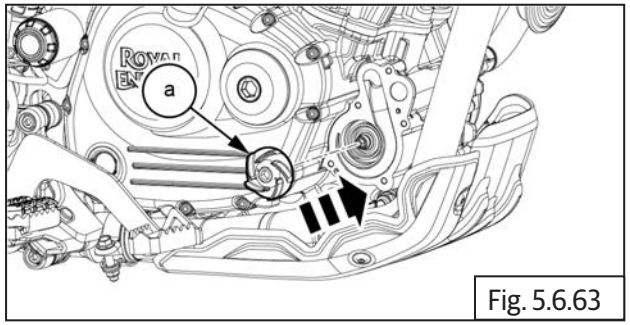

Fig. 5.6.63

- Locate and tighten 1 Nos cap bolt **(M5) (a)** with washer **(b)** into impeller.

NOTE
• *Apply LOCTITE 243 on the threads of the bolt before installing.*

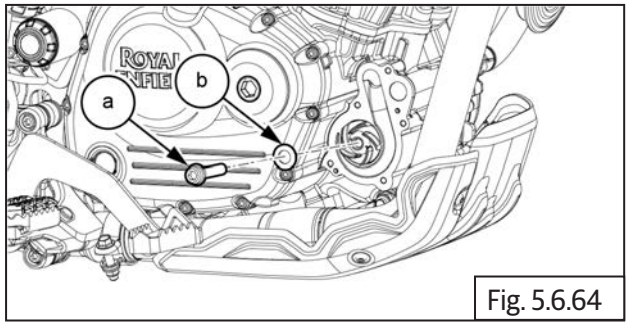

Fig. 5.6.64

	4mm Allen Socket With Ratchet
Torque	4-5 N-m / 0.4-0.5 kgf-m

- Install the gasket **(a)** on water pump cover.

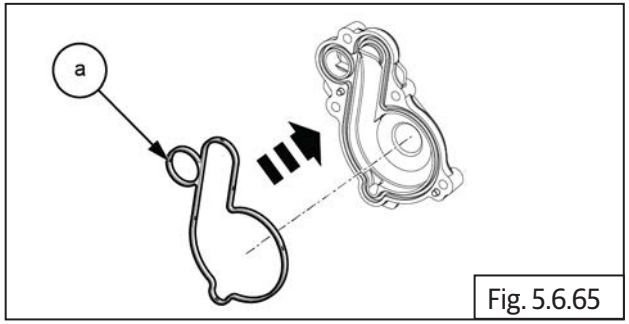

Fig. 5.6.65

NOTE
• *Should not be reuse the old gasket.*

- Locate and tighten 5 Nos cap bolts **(M6) (a)** on water pump.

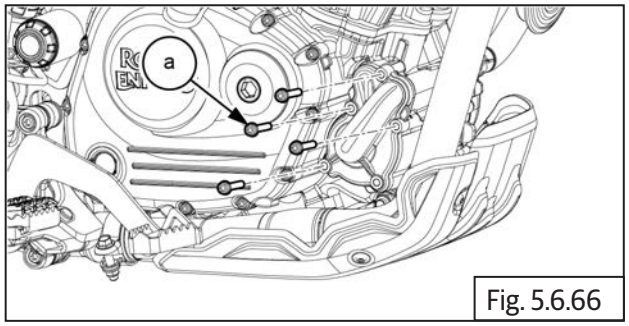

Fig. 5.6.66

	5mm Allen Socket With Ratchet
Torque	10-12 N-m / 1.0-1.2 kgf-m

5.6.11 THERMOSTAT

- Install the "O" ring **(a)** into thermostat.

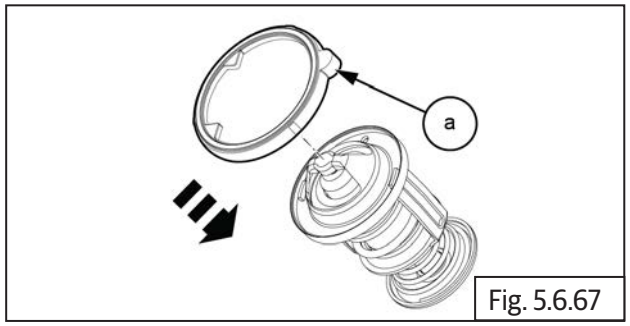

Fig. 5.6.67

- Locate the thermostat **(a)** into housing.

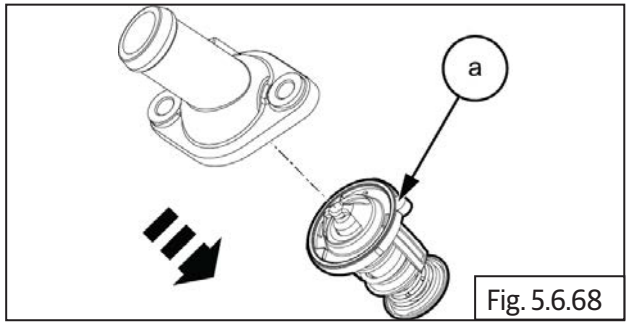

Fig. 5.6.68

- Locate thermostat with housing **(a)** on engine.

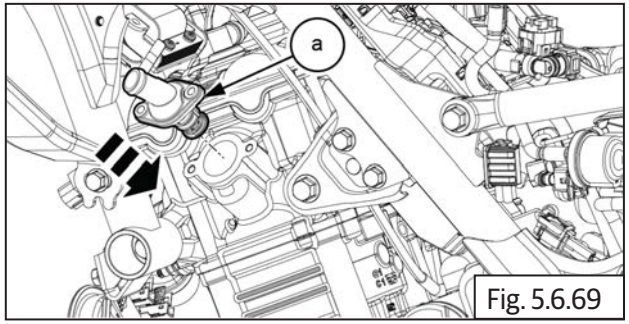

Fig. 5.6.69

- Locate and tighten 2 Nos cap bolts **(a)** on thermostat housing.

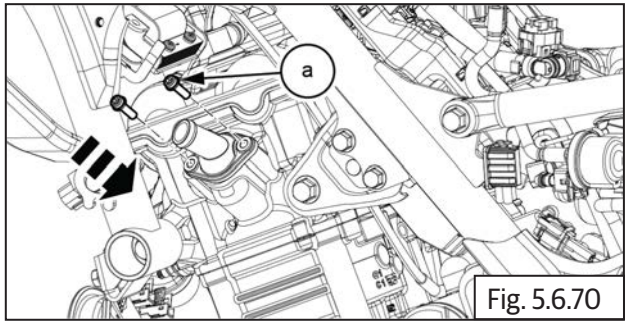

Fig. 5.6.70

	5mm Allen Socket With Ratchet
Torque	10-12 N-m / 1.0-1.2 kgf-m

5.6.12 Radiator child part

- Install the filler neck into hose **(a)**.

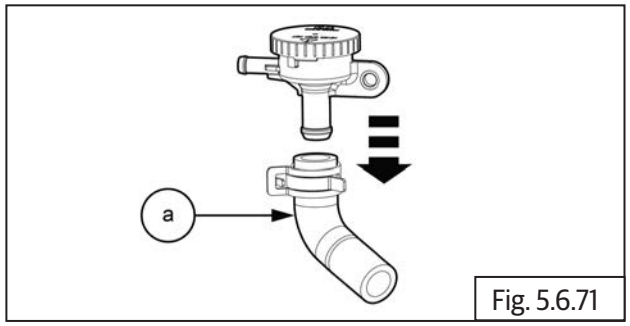

Fig. 5.6.71

- Install the 1 Nos clamps **(a)** on filler neck.

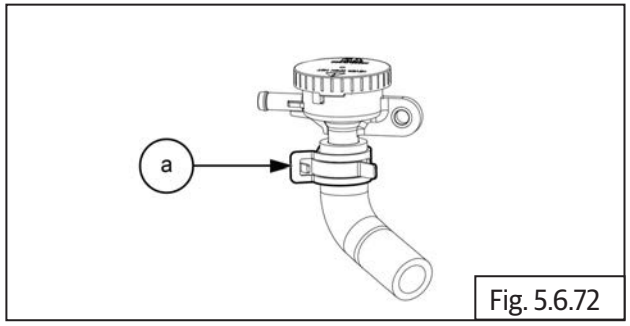

Fig. 5.6.72

	Plier

- Install the bottom hose **(a)** into radiator.

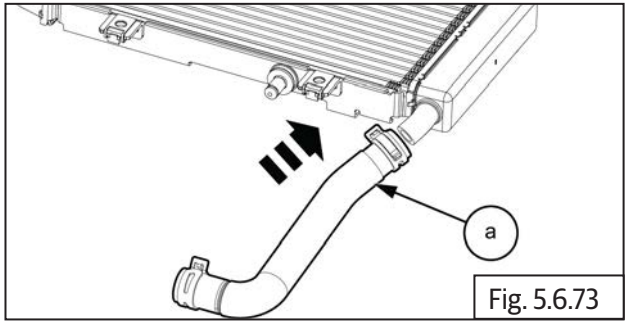

Fig. 5.6.73

- Install the clamp **(a)** on bottom hose.

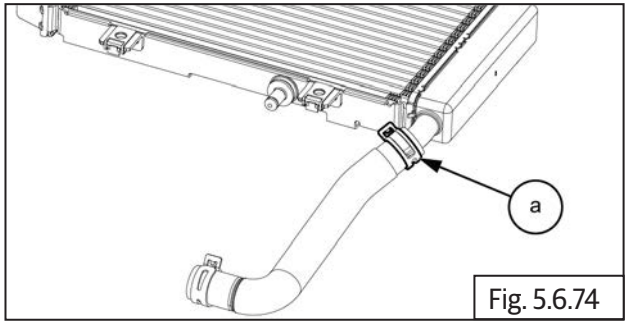

Fig. 5.6.74

	Plier

- Install the top hose **(a)** into radiator.

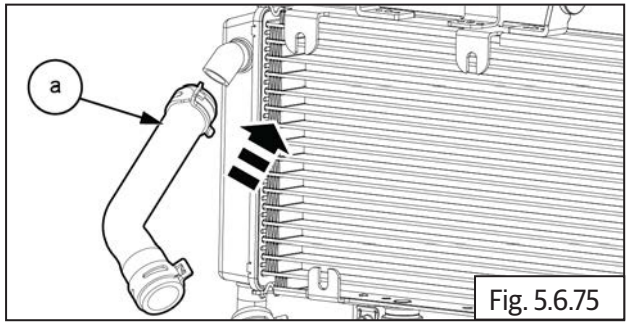

Fig. 5.6.75

- Install the clamp **(a)** from top hose.

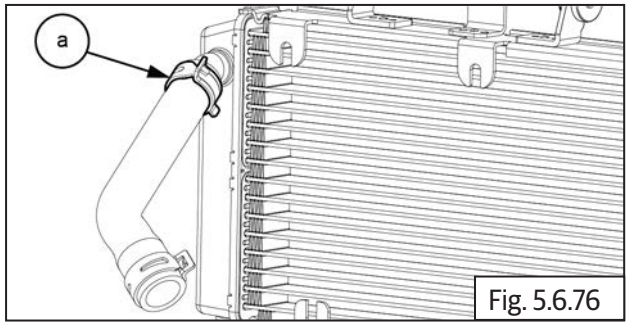

Fig. 5.6.76

	Plier

- Install 1 Nos hat washer **(a)** and 2 Nos grommets **(b)** on top radiator.

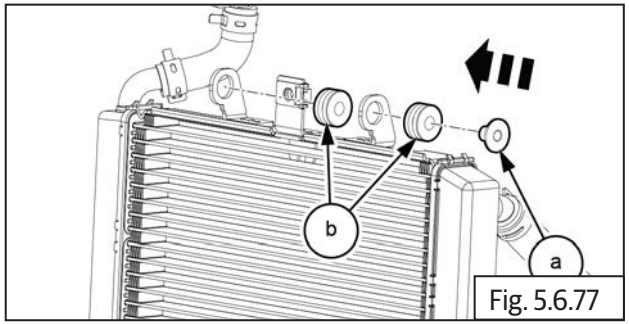

Fig. 5.6.77

- Install the bracket with grommet **(a)** on bottom radiator.

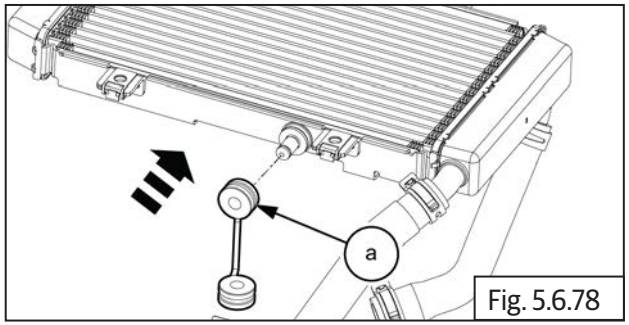

Fig. 5.6.78

- Install washer **(a)** on bottom radiator .

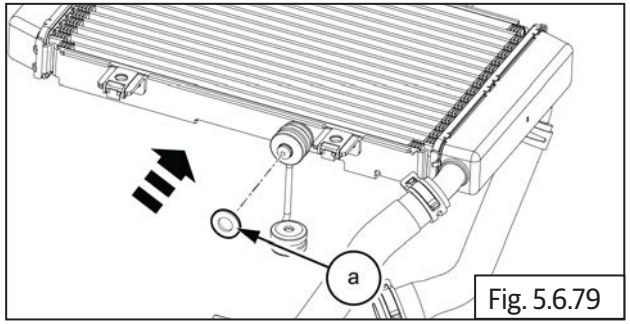

Fig. 5.6.79

- Install the "E" clip **(a)** on bottom radiator.

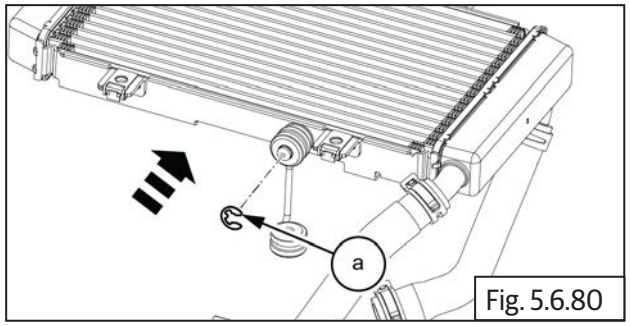

Fig. 5.6.80

	Nose plier

- Install the 3 Nos nut clips **(a)** on radiator.

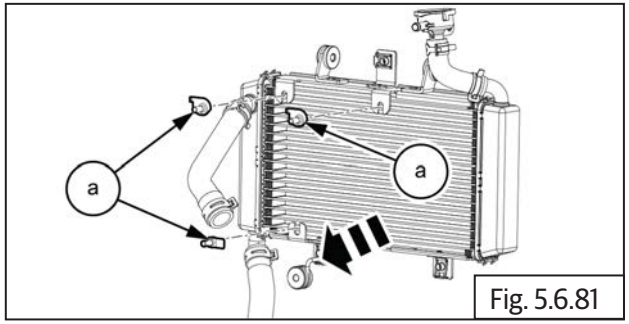

Fig. 5.6.81

5.6.13 Cooling fan

NOTE
• *Ensure fan motor is orientated correctly with wires facing towards closed side of cowl.*
• *Refer the paint mark* **(a)** *before assemble.*

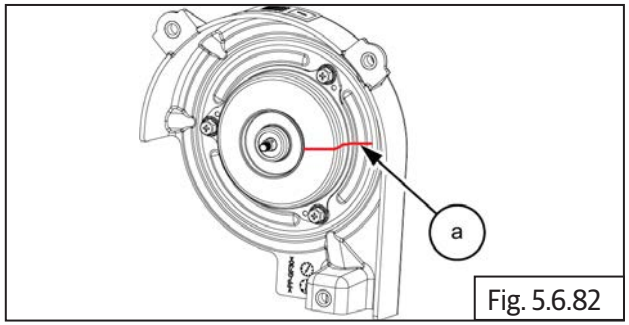

Fig. 5.6.82

- Locate the motor **(a)** on cowl.

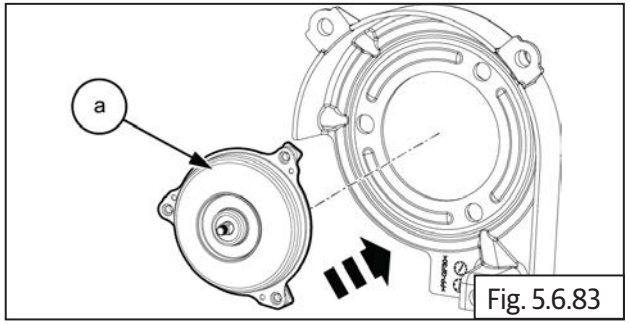

Fig. 5.6.83

- Locate and tighten the 3 Nos bolts **(M4) (a)** on motor.

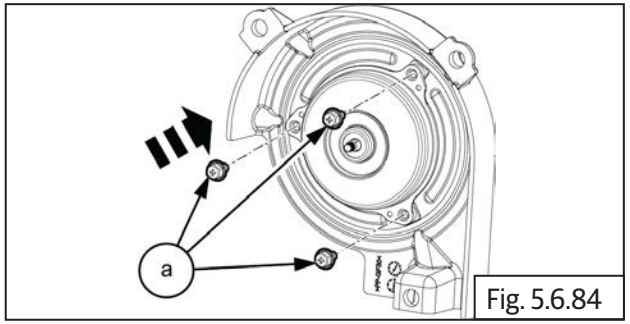

Fig. 5.6.84

	8 mm Socket with Ratchet
Torque	2.45 - 3.92 N-m / 0.25-0.39 kgf-m

- Install the fan **(a)** into motor.

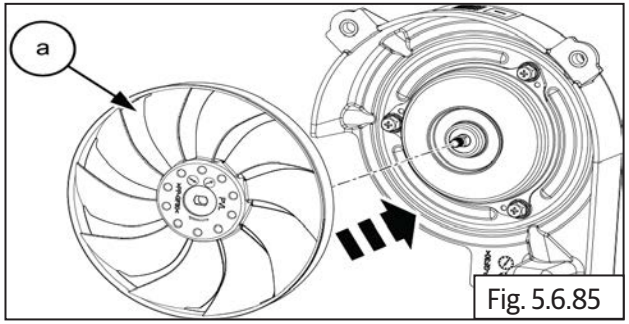

Fig. 5.6.85

- Locate and tighten the 1 Nos nuts **(M4) (a)** into fan.

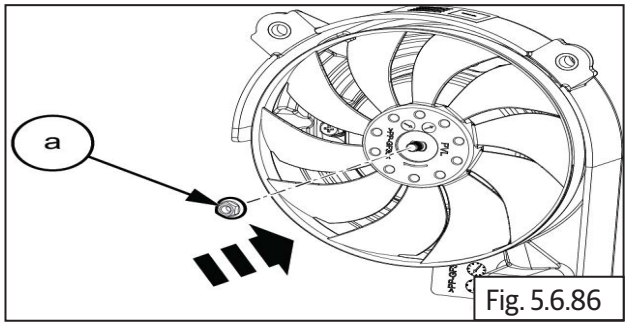

Fig. 5.6.86

	8 mm Socket with Ratchet
Torque	2.45 - 3.92 N-m / 0.25-0.39 kgf-m

- Locate the cooling fan **(a)** into radiator.

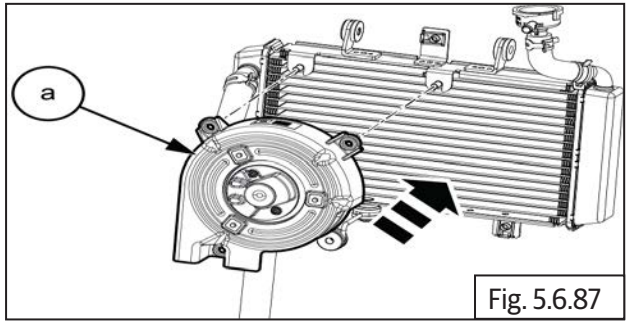

Fig. 5.6.87

- Locate and tighten the 3 Nos nuts **(M6) (a)** into cooling fan.

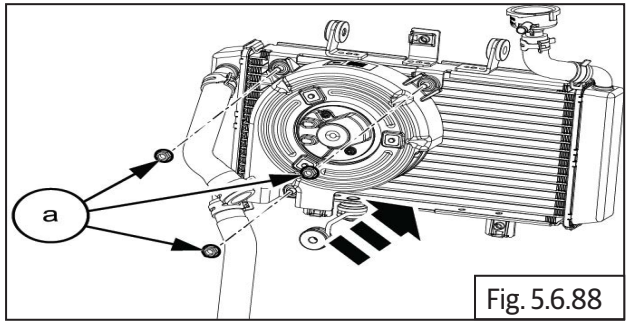

Fig. 5.6.88

	10 mm Socket with Ratchet
Torque	2-2.5 N-m / 0.2-0.25 kgf-m

5.6.14 Radiator

- Install the radiator with hoses **(a)** on engine.

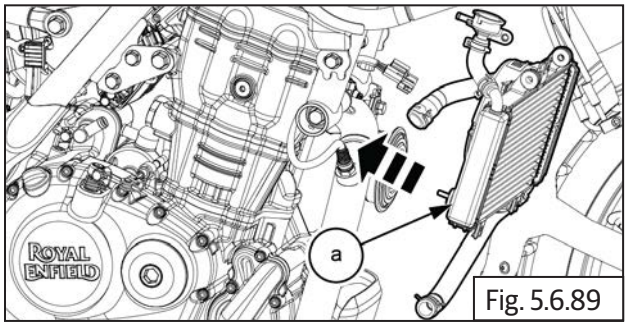

Fig. 5.6.89

- Locate and tighten the 1 Nos bolts **(M6) (a)** on top of the radiator.

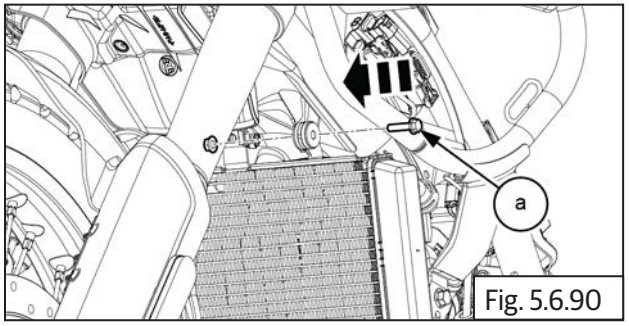

Fig. 5.6.90

	10 mm Socket with Ratchet
Torque	8-10 N-m / 0.8-1.0 kgf-m

- Locate and tighten 1 Nos bolts **(M6) (a)** on bottom of the radiator.

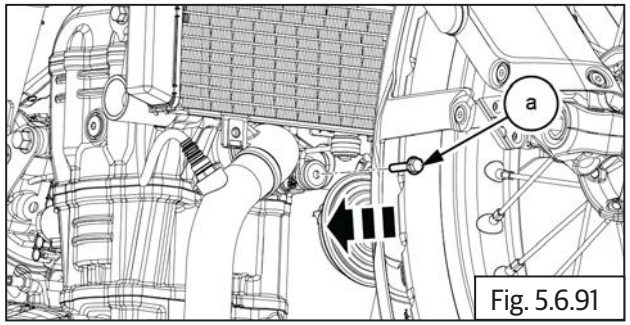

Fig. 5.6.91

	10 mm Socket with Ratchet
Torque	8-10 N-m / 0.8-1.0 kgf-m

- Locate the guard **(a)** on radiator.

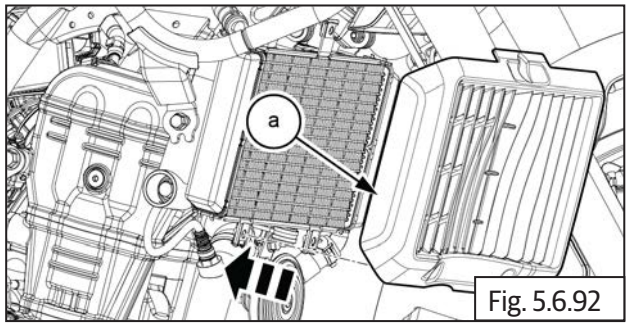

Fig. 5.6.92

- Locate and tighten the 3 Nos bolts **(M6) (a)** from radiator guard.

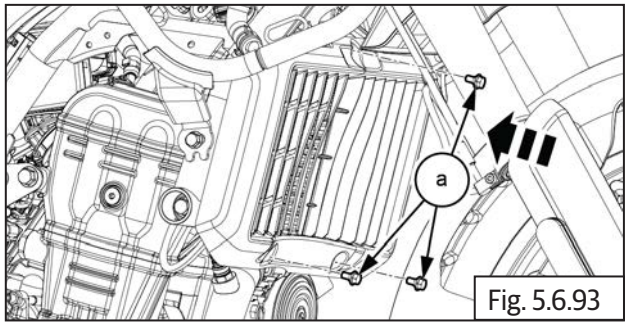

Fig. 5.6.93

	10 mm Socket with Ratchet
Torque	2-4 N-m / 0.2-0.4 kgf-m

- Install the hose **(a)** on thermostat housing.

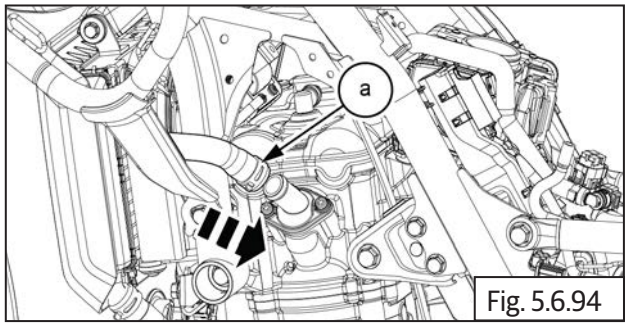

Fig. 5.6.94

- Fix the clamp **(a)** on engine outlet hose.

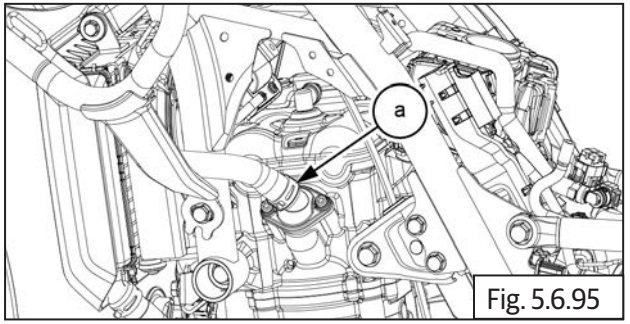

Fig. 5.6.95

	Plier

- Install the hose **(a)** on engine.

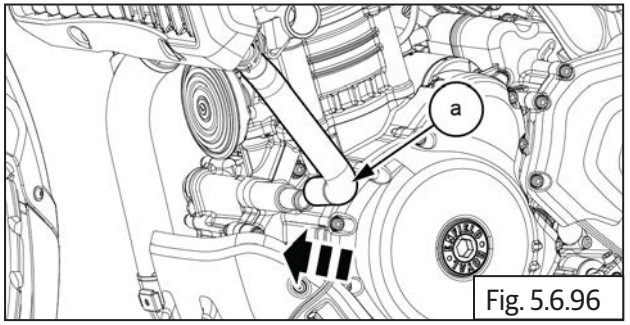

Fig. 5.6.96

- Fix the clamp **(a)** on engine inlet hose.

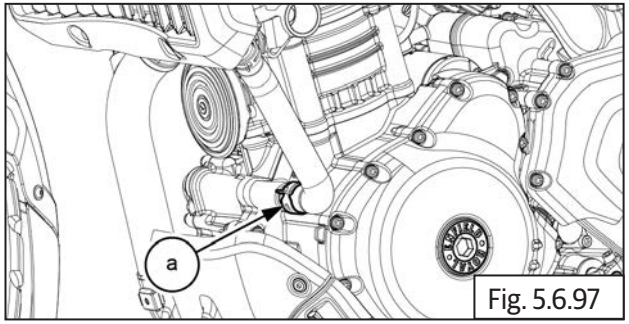

Fig. 5.6.97

	Plier

- Locate and tighten the 1 Nos bolt **(M6) (a)** on filler neck.

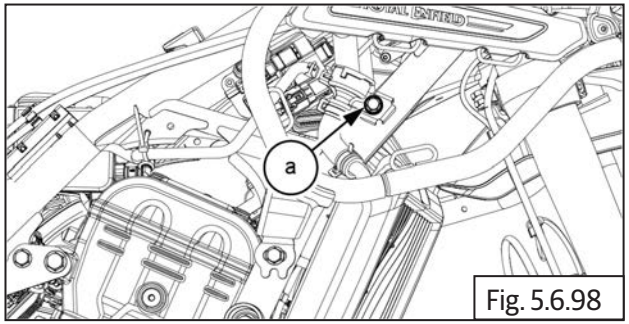

Fig. 5.6.98

	10 mm Socket with Ratchet
Torque	8 - 10 N-m / 0.8 - 1.0 kgf-m

- Connect the cooling fan coupler **(a)**.

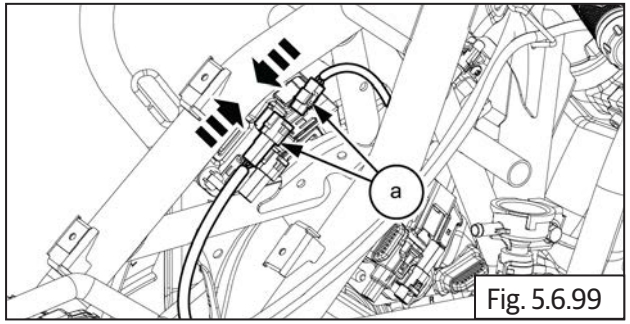

Fig. 5.6.99

5.6.15 Expansion tank

- Install the over flow hose **(a)** and main hose **(a)** on expansion tank.

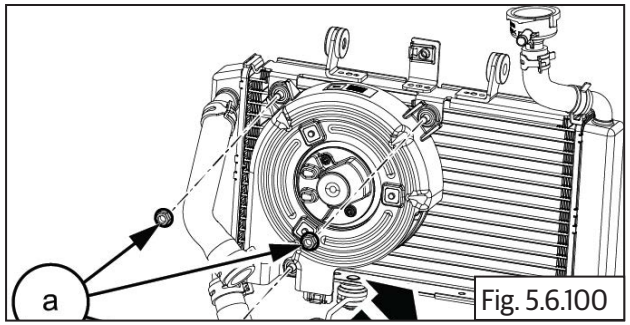

Fig. 5.6.100

- Fix the 2Nos clips **(a)** on over flow hose and main hose.

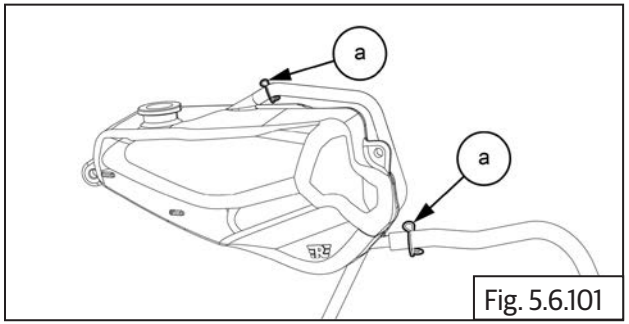

Fig. 5.6.101

	Plier

- Locate expansion tank with hoses **(a)** on chassis frame.

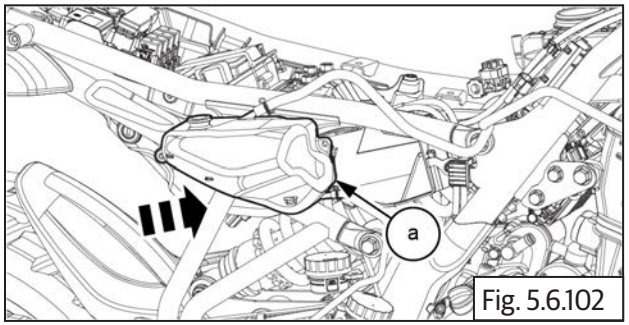

Fig. 5.6.102

- Locate and tighten 2 Nos screws **(a)** on expansion tank.

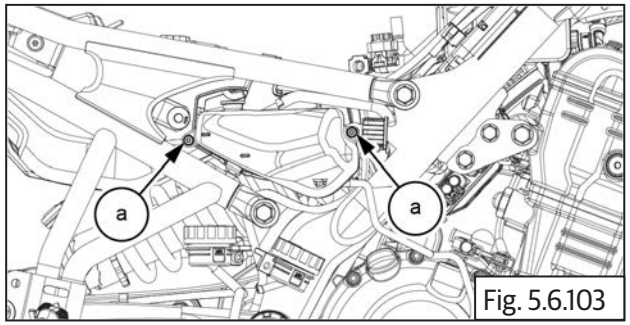

Fig. 5.6.103

	T 20 Torx Socket with Ratchet
Torque	3.5-4.5 N-m / 0.3-0.4 kgf-m

- Fix the clip **(a)** on radiator top.

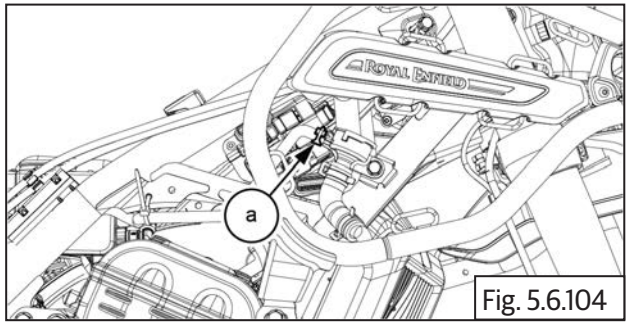

Fig. 5.6.104

	Plier

- Fix the 1 Nos tag **(a)** on hose.

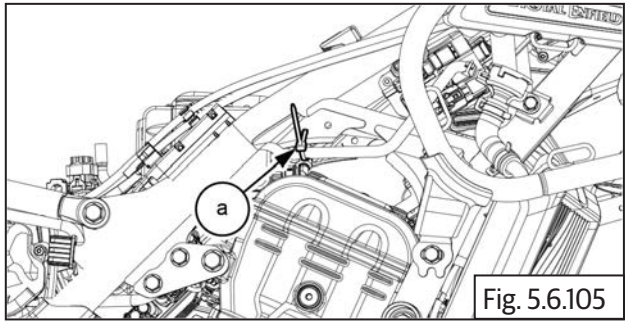

Fig. 5.6.105

- Install the fuel tank.

5.6.16 Radiator coolant filling

⚠ WARNING

Danger of scalding During motorcycle operation, the coolant gets very hot and is under pressure.

Do not remove the radiator cap, radiator hoses or other cooling system components when the engine is hot. Allow the engine and cooling system to cool down. In case of scalding, rinse immediately with lukewarm water.

⚠ WARNING

Danger of poisoning

Coolant is poisonous and a health hazard. Coolant must not come into contact with the skin, eyes, or clothing. If contact occurs with the eyes, rinse with water immediately and contact a physician. Immediately clean contaminated areas on the skin with soap and water. If coolant is swallowed,contact a physician immediately. Change clothing that is contaminated with coolant. Keep coolant out of reach of children.

- Ensure motorcycle engine is cold.
- Place the motorcycle in an upright position on a flat level surface.

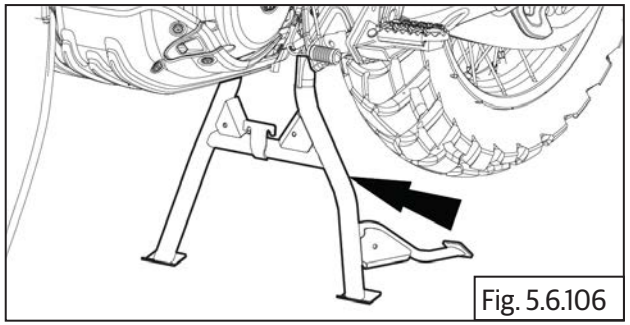
Fig. 5.6.106

- Once drained, replace copper washer **(b)** with a new part and tighten bolt **(M6) (a)** on RHS water pump cover.

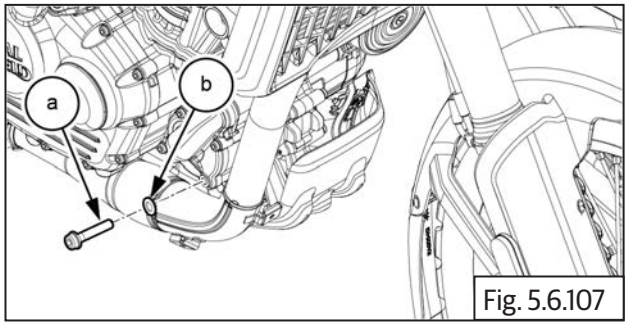

Fig. 5.6.107

	5mm Allen Socket with Ratchet
Torque	10-12 N-m / 1.0-1.2 kgf-m

- Remove the radiator pressure cap **(a)**.

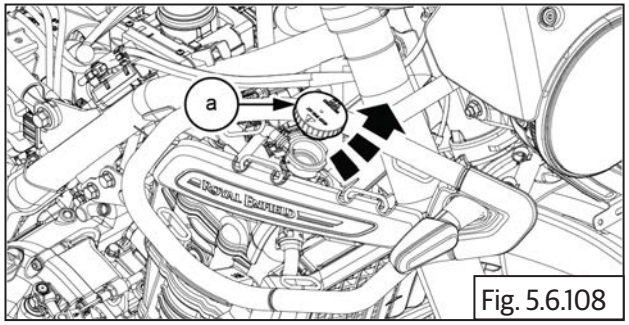

Fig. 5.6.108

- Fill the system with recommended coolant up to the filler neck.

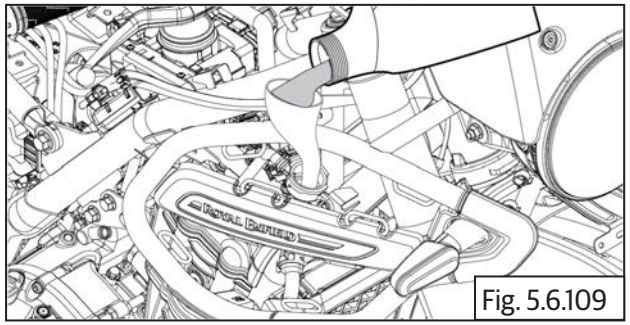
Fig. 5.6.109

Grade	TOTAL COOLELF AUTO SUPRA -37°C
QTY	930ml±15ml

- Close the radiator pressure cap **(a)** ensuring it is correctly fitted & fully tightened clockwise.

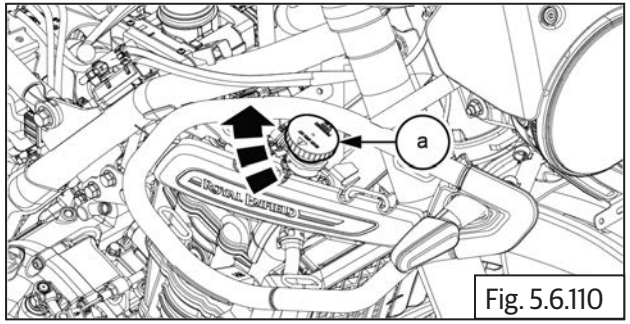

Fig. 5.6.110

- Remove the radiator expansion tank cap **(a)**.

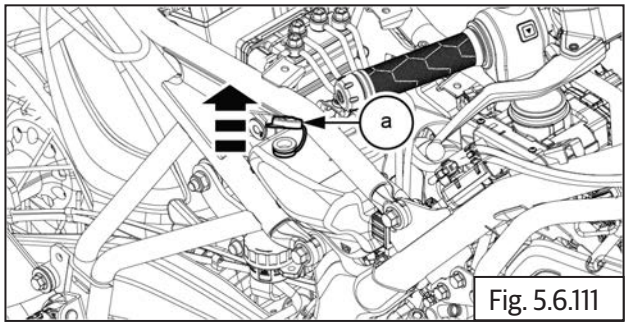

Fig. 5.6.111

- Fill the recommended coolant to the upper level line.

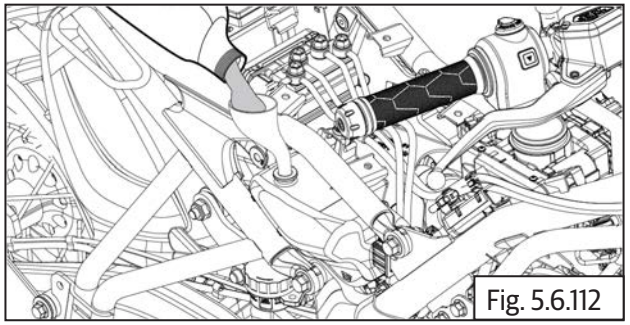
Fig. 5.6.112

Grade	TOTAL COOLELF AUTO SUPRA -37°C
QTY	170ml

- Close the radiator expansion tank cap **(a)**.

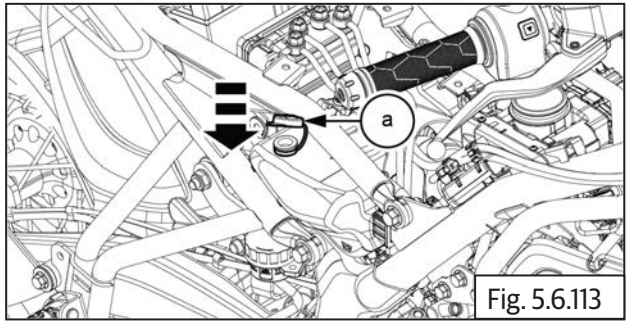

Fig. 5.6.113

5.6.17 Air Bleeding

⚠ CAUTION
Do not run the engine without completing the filling procedure above.

- Remove the radiator pressure cap **(a)**.

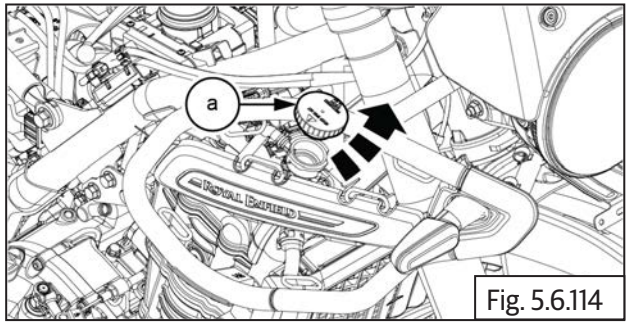

Fig. 5.6.114

- Fill the system with recommended coolant up to the filler neck.

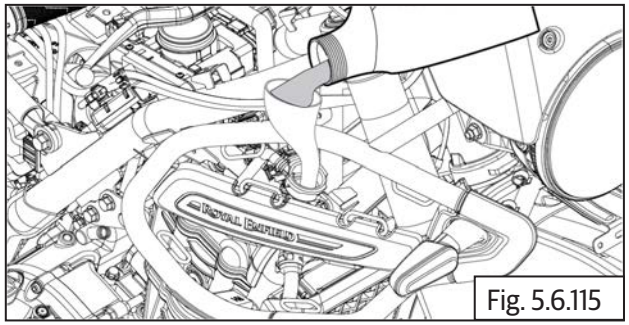
Fig. 5.6.115

Grade	TOTAL COOLELF AUTO SUPRA -37°C

- **(A)** Gently tap and squeeze both engine to radiator bottom hose **(a)**.

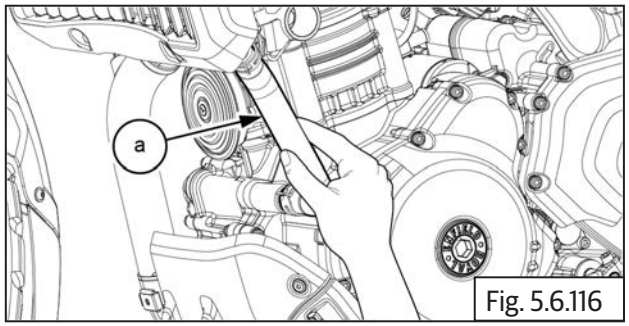

Fig. 5.6.116

- Gently tap and squeeze both engine to radiator top hose **(a)**.

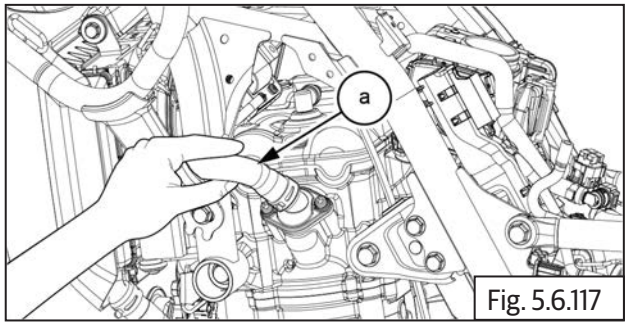

Fig. 5.6.117

- **(B)** Tip the bike to approx 45-60 degree angle on the left and then the right side.

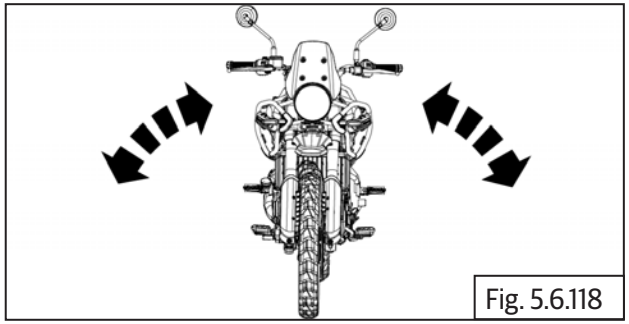
Fig. 5.6.118

- **(C)** If coolant level has dropped, top back up to filler neck level.

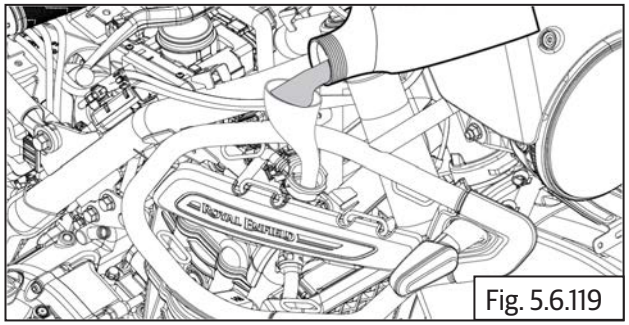
Fig. 5.6.119

Grade	TOTAL COOLELF AUTO SUPRA -37°C

- Repeat above procedure **(steps A to C)** until the level in the filler neck no longer drops
- Close the radiator pressure cap **(a)** ensuring it is correctly fitted & fully tightened clockwise.

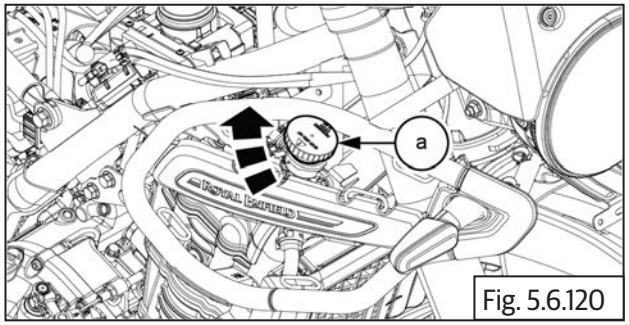

Fig. 5.6.120

- Remove the radiator expansion tank cap **(a)**.

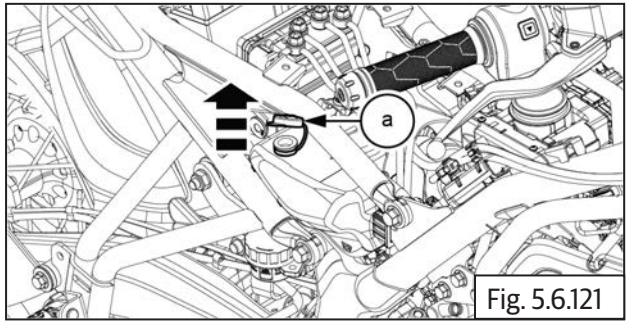

Fig. 5.6.121

- Fill the recommended coolant to the upper level line.

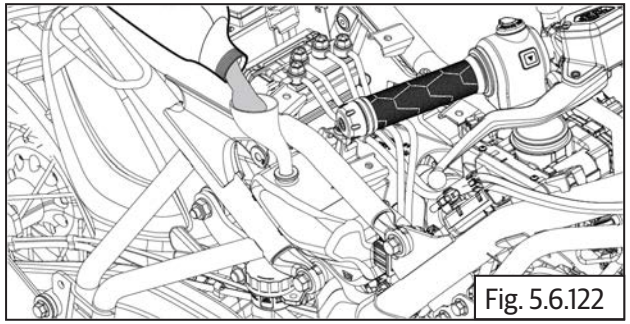
Fig. 5.6.122

Grade	TOTAL COOLELF AUTO SUPRA -37°C

- Start the engine in neutral.
- Run the engine at idle for 5 minutes.
- Blip the throttle 3 or 4 times.

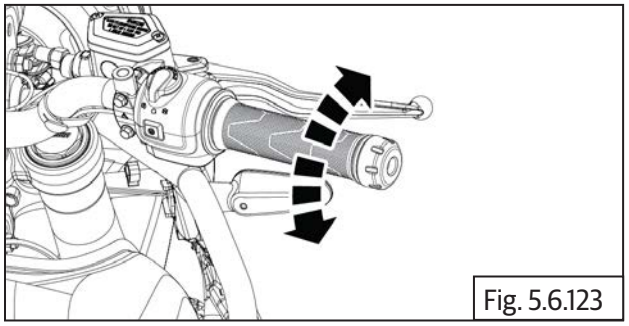
Fig. 5.6.123

- Stop the engine and allow it to cool.
- Top up the coolant at the expansion tank if required.
- Check for coolant leaks.
- Install the LHS and RHS side panels.

5.6.18 Troubleshooting

Symptom	Possible Cause	Diagnosis
Engine Overheating	Too little coolant in cooling system	Check the cooling system for leakage. Check the coolant level
	Radiator fins very dirty	Clean the radiator fins
	Foam formation in cooling system	Drain the coolant, fill / bleed the cooling system
	Thermostat defective	Check the thermo start
	Fan fuse blown	Change the fault fuse
	Defect in radiator fan system	Check radiator fan system

Valve Clearance Adjusting Procedure

CONTENTS PAGE

5.7.1 Valve Clearance checking Procedure..... 219

5.7.2 Valve Clearance Adjusting Procedure..... 222

5.7.3 Shim Calculation..... 226

5.7.1 Valve Clearance checking Procedure

⚠ WARNING

The engine and exhaust system get extremely hot during normal operation and direct contact with skin can cause serious burns. Make sure engine is in normal temperature (OR) cooled before starting operation.

⚠ CAUTION

DO NOT perform any operation on engine system soon after the motorcycle is OFF.

They can extremely hot and will cause serious injuries.

Wait until the engine temperature is the same as the outdoor temperature.

NOTE

- *Ensure the motorcycle is upright on a firm and flat surface.*

Prior Removal:

- Remove the both seats.
- Remove the fuel tank.
- Remove the air filter box.
- Loosen and remove 3 Nos head cover bolts **(M6)** **(a)** with seal washers from cam cover.

⚠ CAUTION

Remove the bolts equally to avoid thread damage.

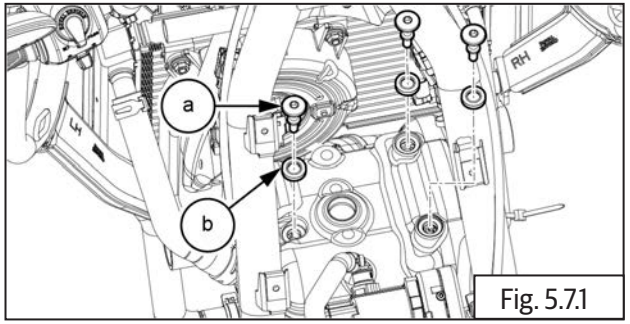

Fig. 5.7.1

	5 mm allen key with Ratchet

- Gently remove cam cover **(a)** from cylinder head.

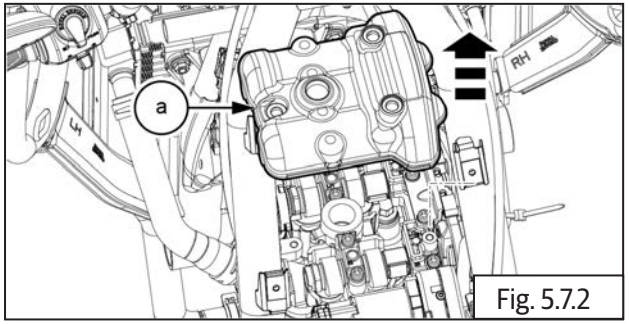

Fig. 5.7.2

- Remove gasket **(a)** from cam cover.

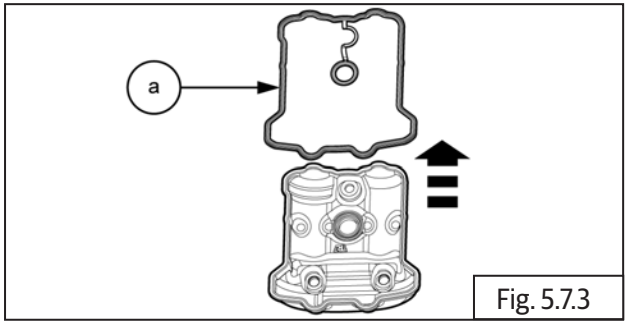

Fig. 5.7.3

- Remove the plug-crankshaft hole **(M34) (a)** with "O" ring **(b)** from middle of the cover LH.

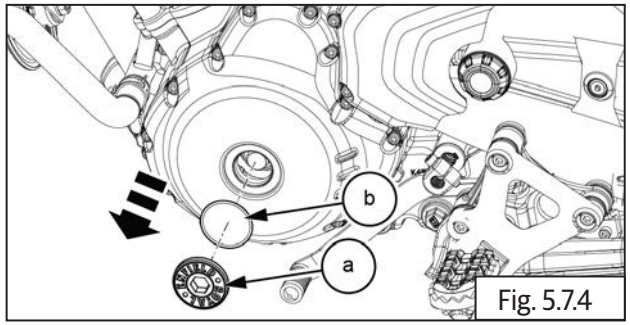

Fig. 5.7.4

	14 mm allen key with Ratchet

- Rotate the magneto rotor slowly until both cam slots are aligned on deck surface.
- Check that inlet and exhaust cam lobes point outwards. See the picture below

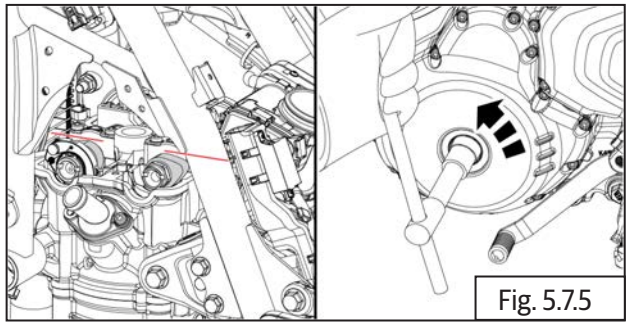
Fig. 5.7.5

	17 mm Socket with Ratchet

- Insert the special tool **(a)** on inlet and exhaust camshaft slot.

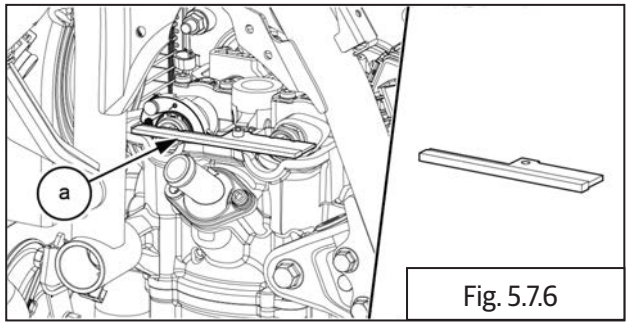

Fig. 5.7.6

SPL	Part No:ST32061/A
	Part Name: Cam TDC Locking Tool

- Check that inlet and exhaust cam lobes point outwards. See the picture below.

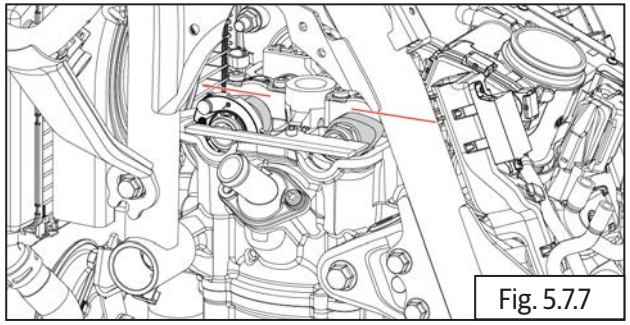
Fig. 5.7.7

NOTE
• *Maximum single feeler gauge thickness to use is 0.15mm. For clearances greater than 0.15mm use combinations of feeler gauges.*
• *e.g. 0.12 + 0.13 = 0.25mm*

- Insert the feeler gauge between camshaft and tappet bucket.

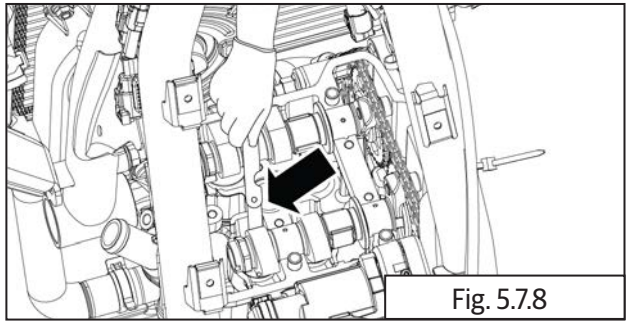
Fig. 5.7.8

	Feeler Gauge

- Check the valve clearance at all valves between the camshaft and tappet bucket.

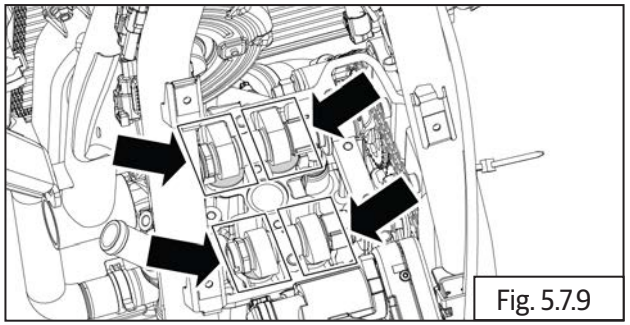

Fig. 5.7.9

- Record clearance values in a table. Refer below table.

Valve Position	Measured Clearance (A)	Measured Fitted Shim (B)	Calculated New Shim (D)	Fitted New Shim (E)	Calculated New Clearance (F))	Measured New Clearance
Int LH						
Int RH						
Exh LH						
Exh RH						

Calculated new shim (D) = A + B - C

Calculated new clearance (F) = A + B - E

- Measured value should be below spec.

Valve Clearances (mm) Cold condition	
Intake valve clearance	**0.12mm to 0.18mm**
Exhaust valve clearance	**0.22mm to 0.28mm**

- If valve clearance does not meet specification, adjust the valve clearance.

All Valve measured value		Status
Intake valve (LH)	**0.15mm**	**ok**
Intake valve (RH)	**0.10mm**	**Not ok**
Exhaust valve (LH)	**0.25mm**	**ok**
Exhaust valve (RH)	**0.30mm**	**Not ok**

5.7.2 Valve Clearance Adjusting Procedure

Prior Removal:

- Remove the sump guard.
- Place the tray to underneath the engine.

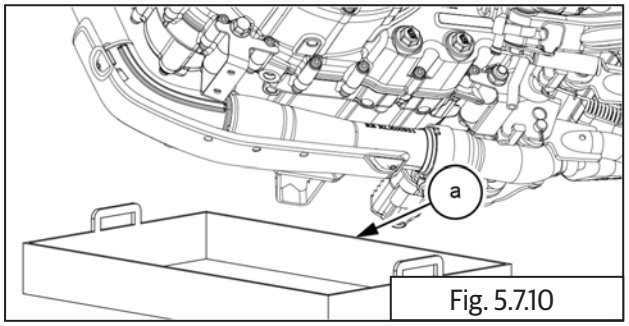

Fig. 5.7.10

- Loosen and remove crank lock plug bolt **(M10) (a)** with copper washer **(b)** .

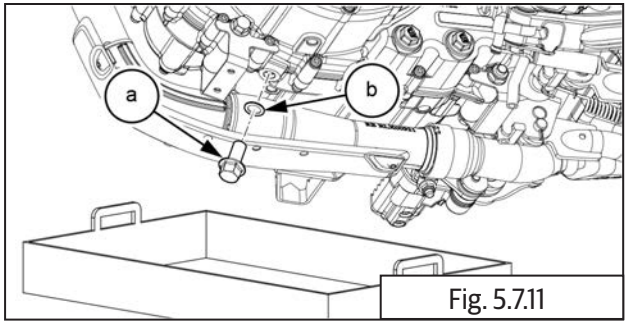

Fig. 5.7.11

	14 mm Socket with Ratchet

- Allow the oil to drain from plug hole.

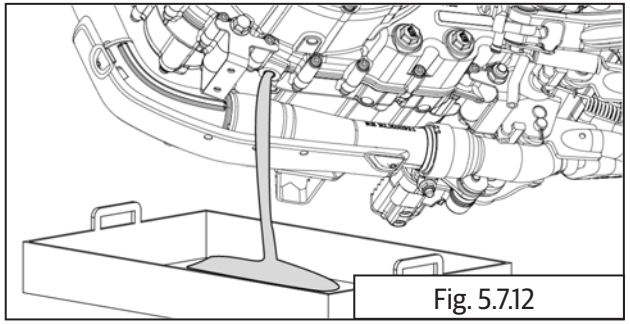
Fig. 5.7.12

- Insert the crank TDC locking tool **(a)** and tighten by hand.

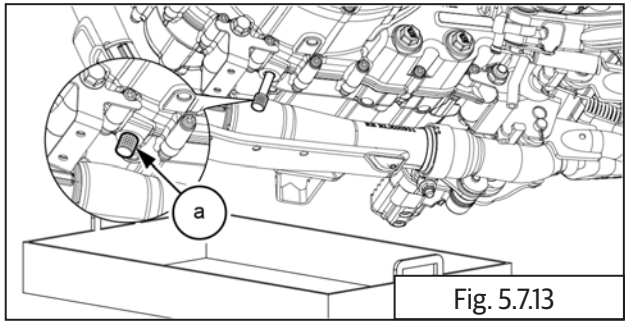

Fig. 5.7.13

SPL	Part No:ST32062/A
	Part Name: Crankshaft TDC Locking Tool

- Once pin is located, ensure crank cannot rotate in either direction.

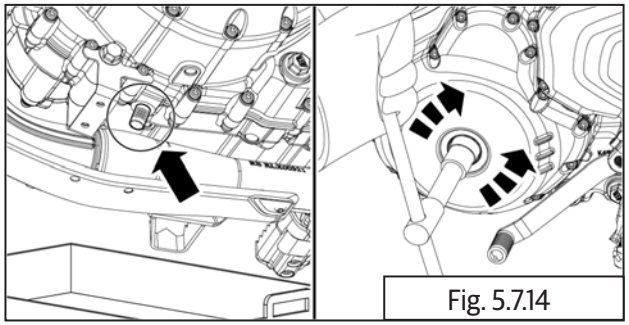

Fig. 5.7.14

- Mark the both cam sprocket and cam chain position using paint marker. See below image.

NOTE
• *Clean the surface of the cam sprocket. If oil is on the surface, the paint marker cannot mark on it.*

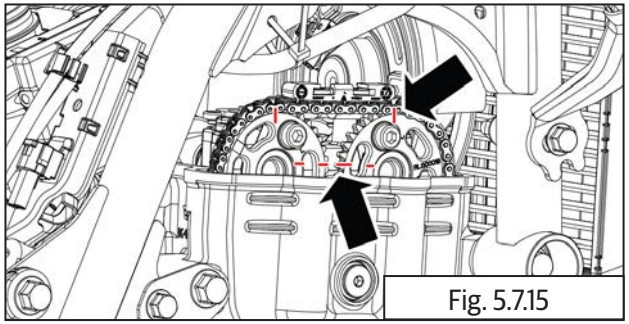

Fig. 5.7.15

	Paint marker

- **HMT -** called as Hydro Mechanical Tensioner.
- Remove the HMT **(a)** with sealing washer **(b)** from engine RHS.

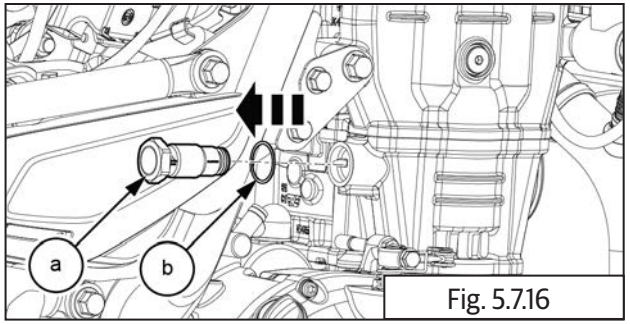

Fig. 5.7.16

	27 mm Socket with Ratchet

- Loosen and remove the inlet and exhaust cam ladder cap bolts **(M6) (a) 6 Nos** from cylinder head.

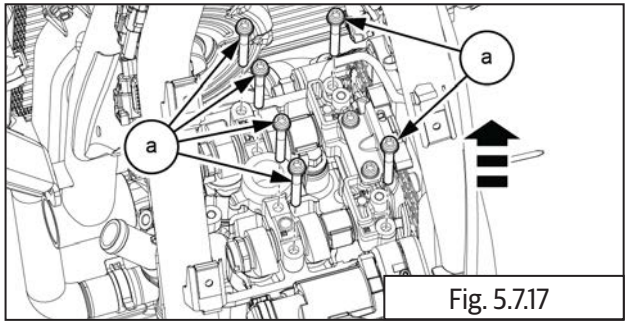

Fig. 5.7.17

	5 mm Allen Socket with Ratchet

⚠ **CAUTION**
Remove the bolts equally to avoid thread damage.

- Loosen and remove the cap bolts **(M6) (a) 2 Nos** from top guide plate.

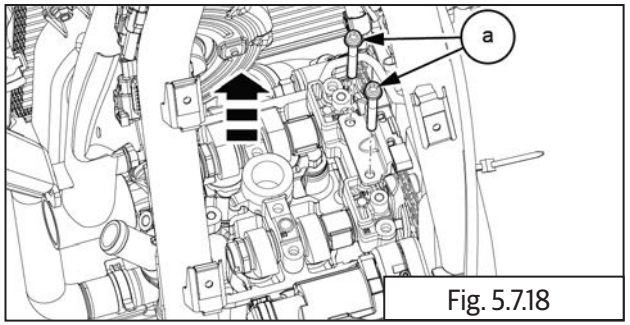

Fig. 5.7.18

	5 mm Allen Socket with Ratchet

- Remove the top guide plate **(a)**.

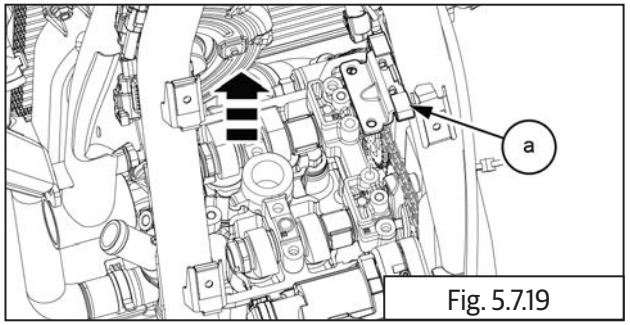

Fig. 5.7.19

- Remove the cam caps **2 Nos (a)** from camshaft.

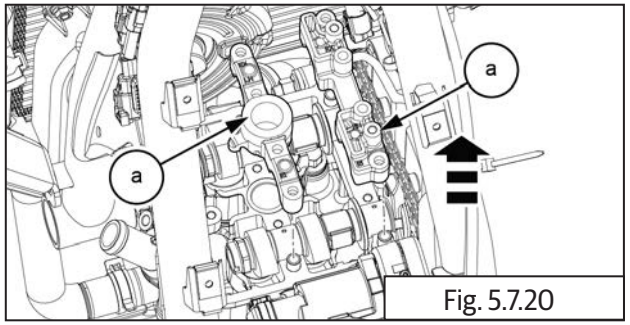

Fig. 5.7.20

- Remove the "O" ring **(a)** from cylinder head.

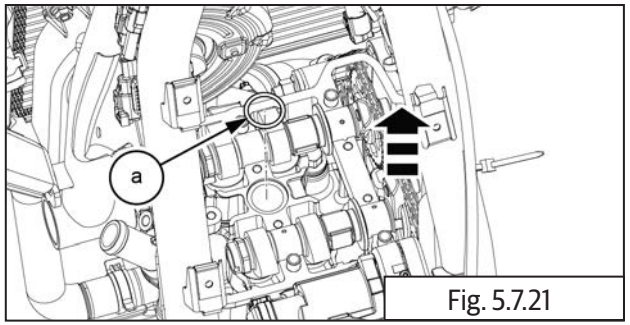

Fig. 5.7.21

- Detach the cam chain **(a)** from inlet and exhaust cam sprocket.

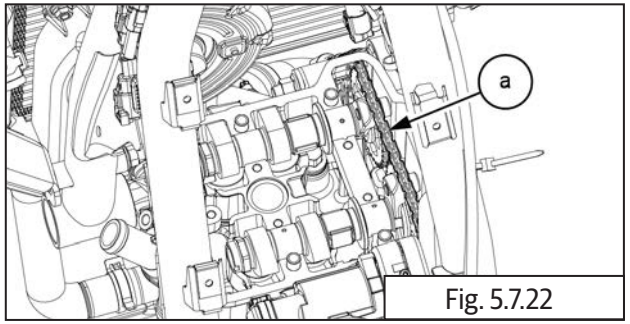

Fig. 5.7.22

- If only inlet clearances require adjustment remove only inlet camshaft **(a)**.
- If only exhaust clearance require adjustment remove only exhaust camshaft **(b)**.

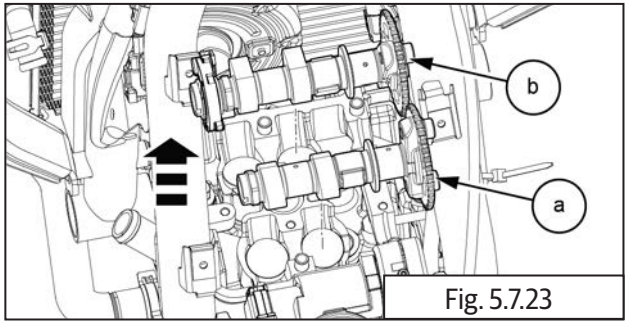

Fig. 5.7.23

NOTE
• *Do not use paint marker.*

- Mark the position of each bucket using marker before removal. It will help to avoid mixed up. Refer below image.

NOTE
• *Clean the top surface of the tappet bucket. If oil is on the surface, the marker cannot mark on it.*

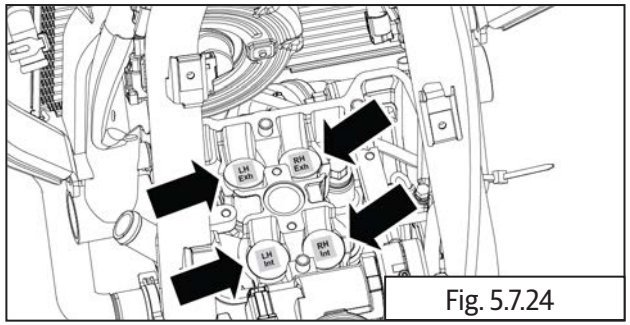

Fig. 5.7.24

	Marker

- **Work in this below order:**

1. Inlet LH
2. Inlet RH
3. Exhaust LH
4. Exhaust RH

- Adjust clearances only where required to bring them within range.

- Remove the inlet tappet bucket (RH) **(a)** using magnetic stick.

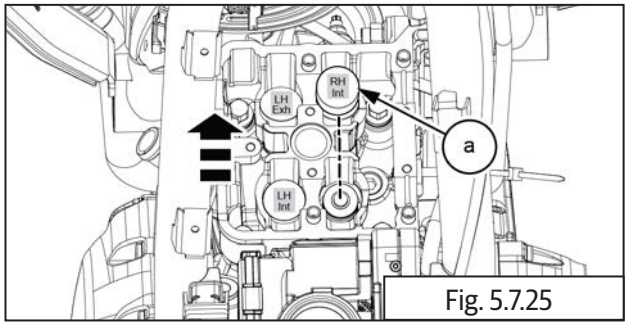

Fig. 5.7.25

	Part Name: Magnetic stick

- Measure the thickness of the shim using a micrometer.

NOTE
• *Micrometer MUST be calibrated.*

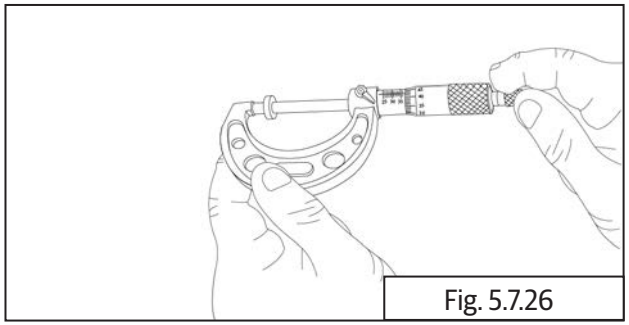
Fig. 5.7.26

- Remove the shim **(a)** from retainer using magnetic stick.

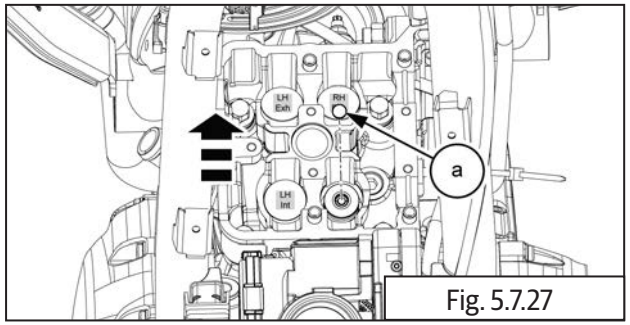

Fig. 5.7.27

	Part Name: Magnetic stick

- Record clearance values in a table.Refer 5.9.3.A

5.7.3. Shim Calculation

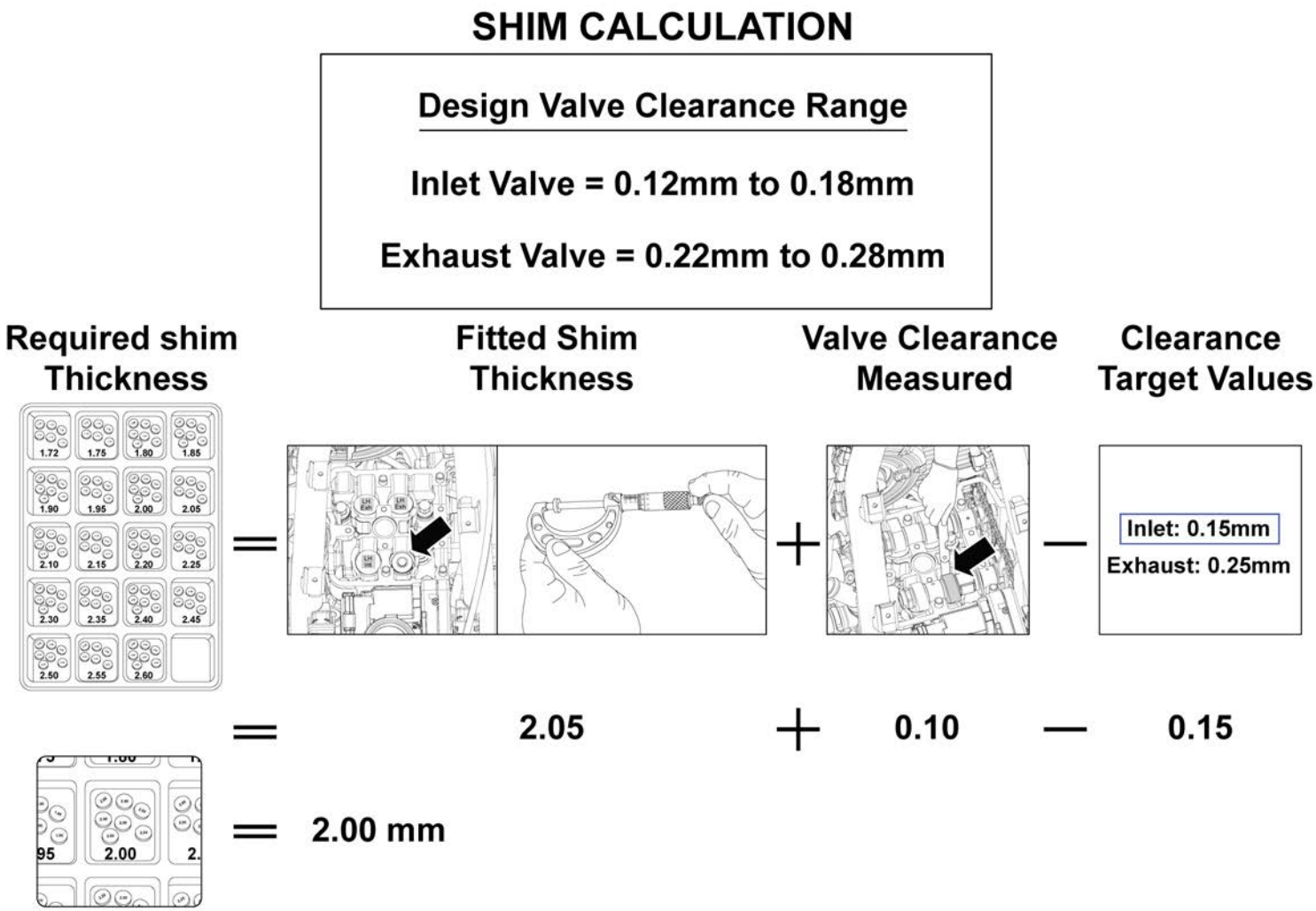

5.7.3.A Table

	Manual Data Entry here		Google Sheet Calculated Values Here			Manual Data Entry Here
Valve Position	Measured Clearance (A)	Measured Fitted Shim (B)	Calculated New Shim (D)	Fitted New Shim (E)	Calculated New Clearance (F))	Measured New Clearance
Int LH	0.10	2.05	2.00	2.00	0.15	
Int RH	0.15	2.20	2.20	2.20	0.15	
Exh LH	0.19	1.95	1.89	1.90	0.24	
Exh RH	0.29	2.00	2.04	2.05	0.24	

Target Clearance (C)

Intake = 0.15

Exhaust = 0.25

Calculated new shim (D) = A + B - C

Calculated new clearance (F) = A + B - E

NOTE

- *If the shims or tappet buckets misplaced, the adjustment will not be accurate.*
- *When adjusting the clearances you should complete the process for one valve before you start the adjustment for another valve. It is important to make sure that the shims and tappet buckets are not mixed up.*

- Install the new calculated thickness shim **(a)** on the retainer and reassemble the tappet bucket.

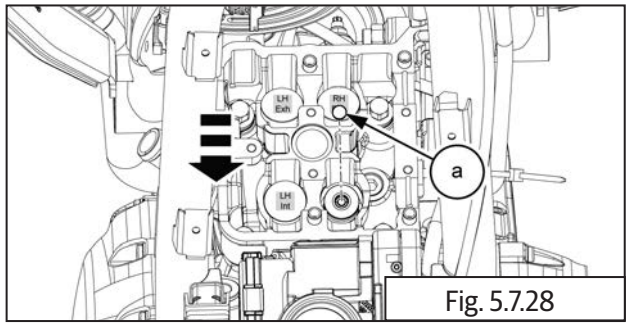

Fig. 5.7.28

- Repeat the above process for each of the valves where the clearance needs to be adjusted.

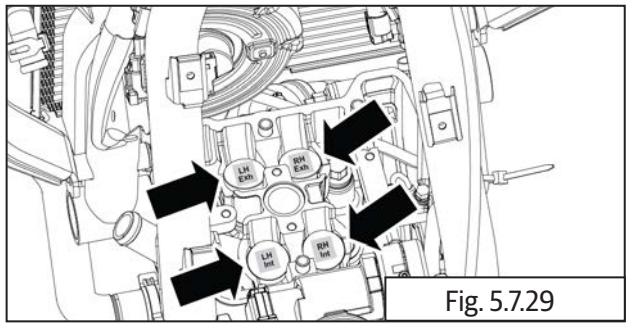

Fig. 5.7.29

- Exhaust camshaft **(b)** should be installed before inlet camshaft **(a)** if both camshafts have been removed.

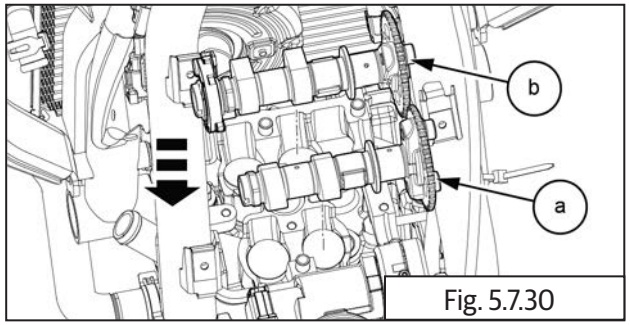

Fig. 5.7.30

- Chain should be fitted over cam sprockets and paint marks should be lined up at this stage before the 2Nos cam caps are re-fitted.

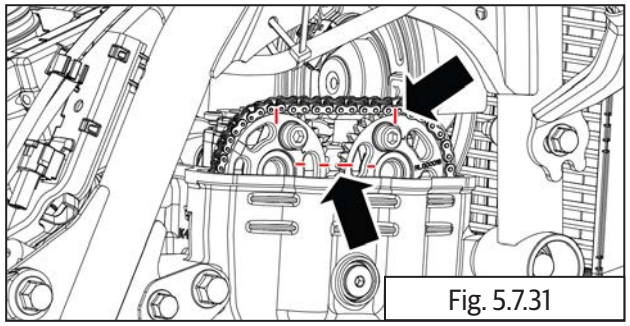
Fig. 5.7.31

- Install the timing chain **(a)** on the both cam sprocket.

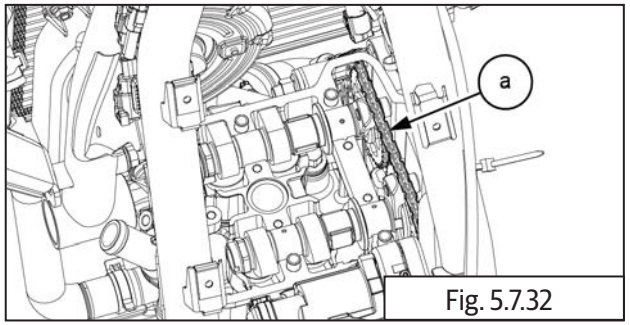

Fig. 5.7.32

- Match the sprockets and chain on as per the paint mark.

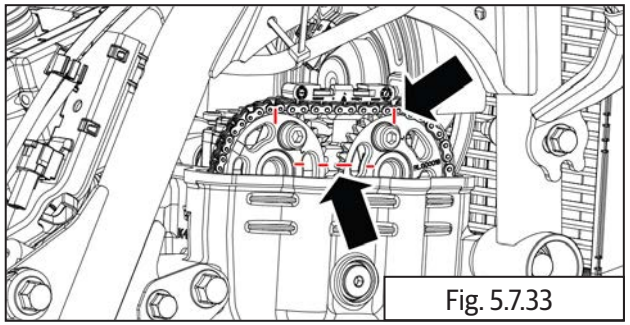
Fig. 5.7.33

NOTE
• *Ensure no chain slackness between crank sprocket and exhaust cam sprocket. Refer below image.*

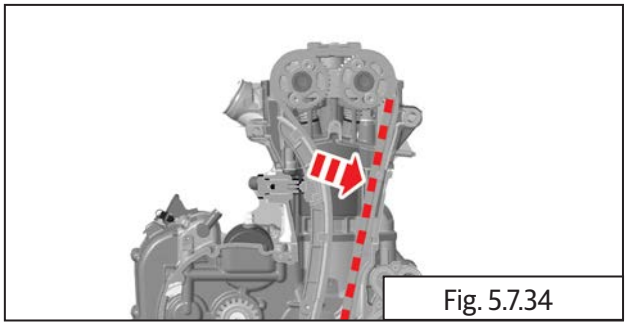

Fig. 5.7.34

- Install the new "O" ring **(a)** on the cylinder head.

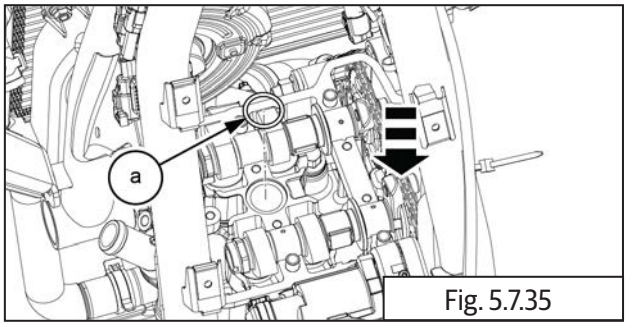

Fig. 5.7.35

- Install the inlet and exhaust cam caps **(a)**.

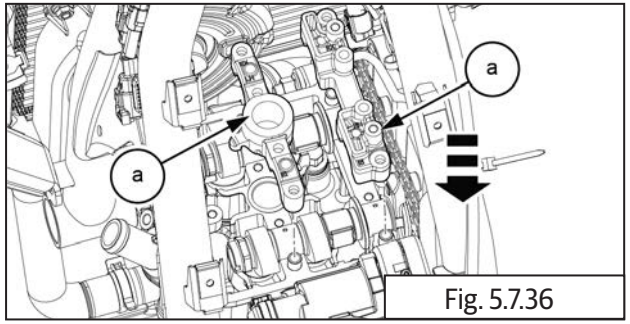

Fig. 5.7.36

- Locate and tighten the inlet and exhaust cam cap bolts **6 Nos (M6) (a)** on cylinder head.

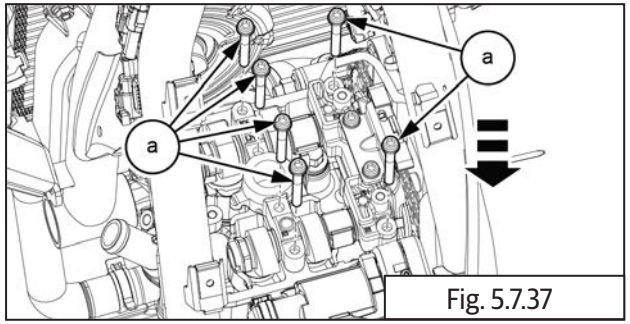

Fig. 5.7.37

	5mm Allen Socket With Ratchet
Torque	10 N-m / 1.0 kgf-m

- Locate and tighten the cap bolts **(M6) 2 Nos (a)** on top guide plate.

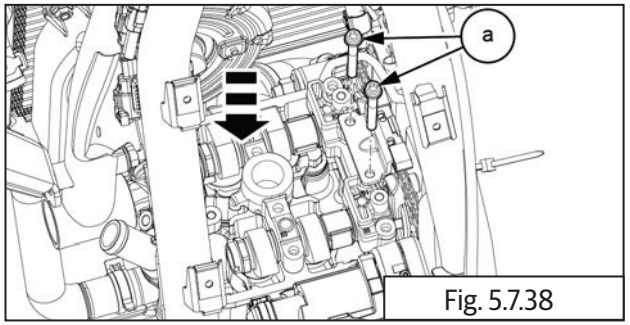

Fig. 5.7.38

	5mm Allen Socket With Ratchet
Torque	10 N-m / 1.0 kgf-m

NOTE
• HMT should be in Transit position before install refer below image.

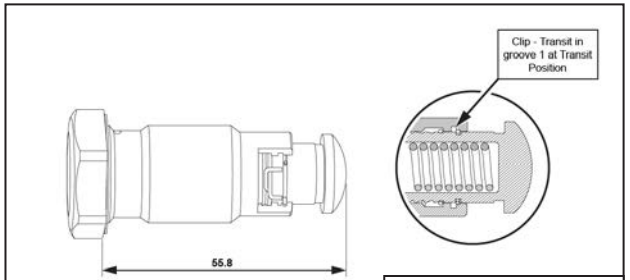

Fig. 5.7.39

- Install the HMT **(a)** with new sealing washer **(b)** on engine RHS.

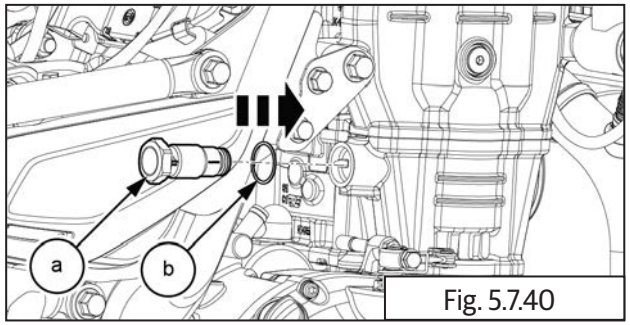

Fig. 5.7.40

	27 mm Socket with Ratchet
Torque	38 -42 N-m / 3.8 - 4.2 kgf-m

- Using a special tool push cam chain against tensioner arm. Refer below image.

NOTE
• Listen for "click" as HMT releases from transit position and ratchet is disengaged. • "click" will only be heard if background noise level is low.

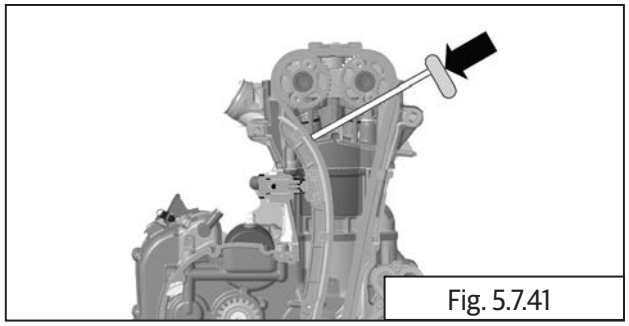
Fig. 5.7.41

SPL	Part No: ST32070/A
	Part Name: Nylon rod

- Insert the special tool **(a)** on inlet and exhaust camshaft to confirm the timing is correct.
- At this stage the clearances should be checked again to ensure that the valve clearance adjustment has been done correctly.
- If the clearances are not correct the adjustment process MUST be repeated.

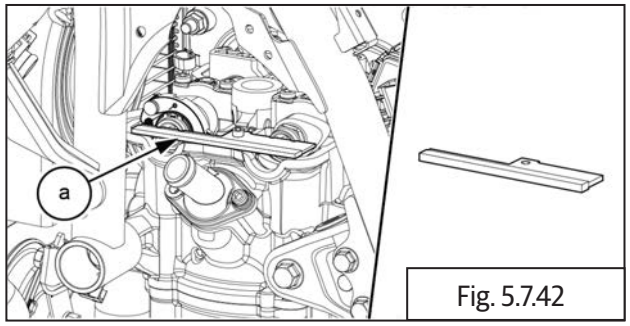

Fig. 5.7.42

SPL	Part No: ST32061/A
	Part Name: Cam TDC locking tool

- Remove the Crank TDC locking tool **(a)**.

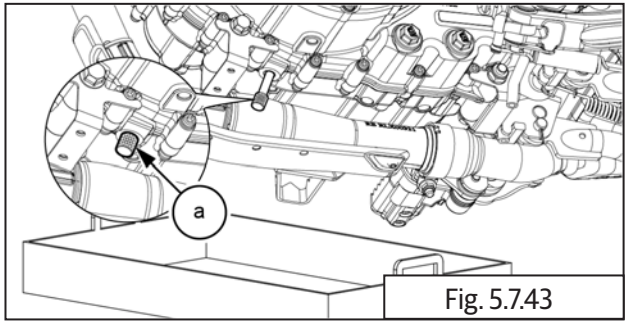

Fig. 5.7.43

SPL	Part No:ST32061/A
	Part Name: Crank TDC locking tool

- Locate and tighten the crank lock plug bolt **(M10) (a)** with new copper washer **(b)** .

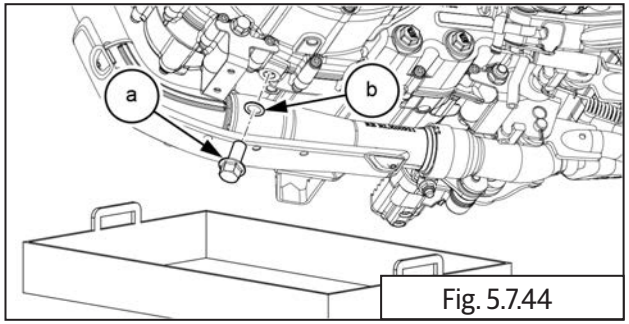

Fig. 5.7.44

	14 mm Socket with Ratchet
Torque	30 -34 N-m / 3.0 - 3.4 kgf-m

- Apply lubricant on the "O" ring before assembly process.
- Locate and tighten the plug crankshaft hole **(M34) (a)** with new "O" ring **(b)** on middle of the cover LH.

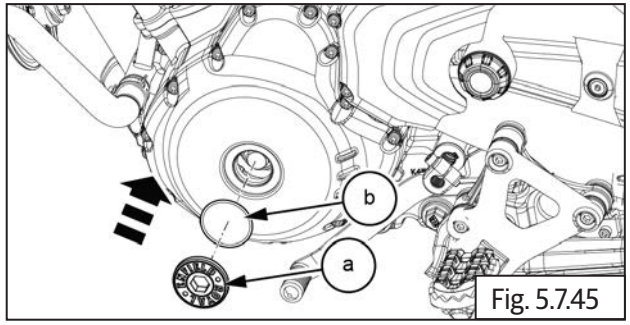

Fig. 5.7.45

	Tyre lube or P-80 emulsion

	14 mm allen key with Ratchet
Torque	18 -22 N-m / 1.8 - 2.2 kgf-m

- Install the cam cover with new gasket **(a).**

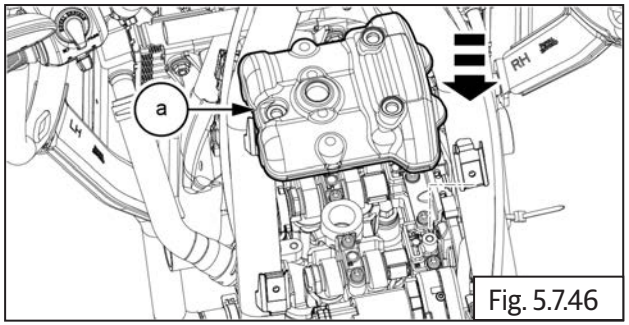

Fig. 5.7.46

- Install and tighten the head cover bolts **3 Nos (M6) (a)** with new seal washers on cam cover.

⚠ CAUTION
Tighten the bolts equally to avoid thread damage.

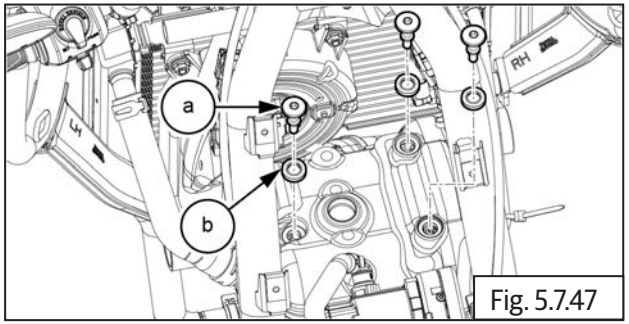

Fig. 5.7.47

	5 mm allen key with Ratchet
Torque	11 N-m / 1.1 kgf-m

- Fill recommended engine oil till the level is between the “Max and Min” marks on the oil level window on clutch cover.

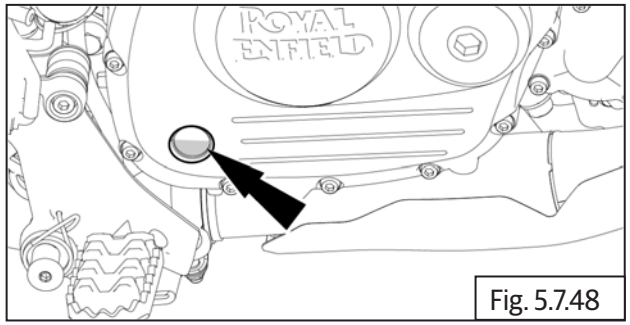

Fig. 5.7.48

Grade	ELF Moto 4 Roadstar 10W-40 (API SN/JASO MA2)

Assemble the following parts:

- Install the sump guard
- Install the fuel tank
- Install the both seats.

ENGINE TROUBLESHOOTING

5.8 Engine Troubleshooting

Symptom	Possible Cause	Diagnosis	How to Fix
Poor/Weak Compression	Spark plug is loose	Spark plug is not tightened to torque	Check and tighten spark plug to specified torque.
		Threads are stripped OR damaged on spark plug OR cylinder head	Inspect spark plug tightening threads in cylinder head for wear-out/damage. Replace cylinder head assembly. Inspect spark plug threads for any damages OR wear-out. Replace spark plug.
	No clearance between rocker arm and valve stem	Tappet is adjusted too tight (Causing valves to be partially open in TDC compression stroke)	Refer tappet bucket setting procedure. Check and Adjust valve clearance as per specifications.
	Valve(s) movement sticky in valve guide(s)	Valve stem is partially seized in valve guide	Check valve(s) for free movement in valve guide(s). Replace as required.
		Valve stem(s) bent	

Symptom	Possible Cause	Diagnosis	How to Fix
Poor/Weak Compression	Valve(s) stuck open after compression stroke (Valve timing)	Sprocket is incorrectly aligned to cam shaft	Check and align sprocket correctly on cam shaft.
		Cam shaft rotation is partially seized (sticky) in cylinder head	Check cam shaft for free movement in cylinder head. Replace as required.
	Cylinder head gasket leakage	Uneven head bolt torque	Remove and inspect cylinder head/ cylinder barrel seating surfaces for warpage, damage, unevenness, etc. Replace cylinder head gasket and tighten cylinder head bolts to specified torque.
		Uneven/damaged seating surface on cylinder head/cylinder barrel	
	Piston rings are worn out	Excessive gap in piston rings at the end in cylinder barrel	Inspect piston rings and cylinder barrel for excessive wear out. Replace piston rings/piston with rings. Replace cylinder barrel assembly if cylinder barrel is worn out.

Symptom	Possible Cause	Diagnosis	How to Fix
Poor/Weak Compression	Piston scuffed/partially seized in cylinder barrel	Piston scuffed/damaged/partially seized in cylinder barrel	Inspect cylinder barrel for damages/ heavy scoring and replace piston assembly AND/OR cylinder barrel as required.
Engine Overheating	Oil level is low	External oil leakage	Inspect all joints carefully for oil leaks and rectify.
		Excess oil consumption	Check for smoke through exhaust in hot condition, inspect valve stem seals, valve stem to guide excess clearance, piston rings wear-out, and piston/ cylinder barrel wear-out/damage. Repair/replace accordingly.
	Engine oil is contaminated	Non recommend engine oil is used Metal particles found in oil	Drain oil, replace oil filter and fill fresh engine oil as per Royal Enfield recommendation.

Symptom	Possible Cause	Diagnosis	How to Fix
Engine Overheating	Engine oil has lost viscosity	Engine oil is contaminated and too thin	Drain oil, replace oil filter and fill fresh engine oil as per Royal Enfield recommendation.
	Engine oil looks too black/highly viscous	Engine oil is not changed as per recommended maintenance schedule	
	Low engine oil pressure	Strainer is blocked	Remove oil sump cover and strainer, Clean/replace oil strainer. Replace oil filter and fill fresh engine oil as per Royal Enfield recommendation.
		Poor delivery by oil pump	Check oil pressure, inspect oil pump for internal blocks OR wear out. Clean & replace oil pump as required. Replace oil filter and fill fresh engine oil as per Royal Enfield recommendation.
	No clearance between tappet bucket and cam shaft	Tappet(s) adjusted is too tight (Causing valves to be partially open in TDC compression stroke)	Check and adjust tappet clearances to specifications.

Symptom	Possible Cause	Diagnosis	How to Fix
Engine Overheating	Partial seizure of Engine internals	Rocker arm(s)is partially seized (sticky) in spindle(s)	Check rocker arm(s) for free movement in spindle(s).
		Cam shaft rotation is partially seized (sticky) in cylinder head	Check cam shaft for free movement in cylinder head.
		Valve stem is partially seized (sticky) in valve guide	Check valve(s) for free movement in valve guide(s).
		Piston is scuffed/damaged/partially seized in cylinder barrel	Inspect cylinder barrel for damages/heavy scoring and replace piston assembly AND/OR cylinder barrel as required.
		Connecting rod is partially seized in crank shaft assembly	Dismantle engine, inspect all internal parts, replace as required and reassemble engine.
		Journal bearings/crankshaft/balancer shafts are seized	
	Transmission drag	Bearings/Gear/Bushes in the shaft are seized	Dismantle engine, inspect all internal parts, replace as required and reassemble engine.
	Too little coolant in cooling system	Check the cooling system for leakage. Check the coolant level	
	Radiator fins very dirty	Clean the radiator fins	
	Foam formation in cooling system	Drain the coolant, fill / bleed the cooling system	
	Thermostat defective	Check the thermo start	
	Fan fuse blown	Change the fault fuse	
	Defect in radiator fan system	Check radiator fan system	

Symptom	Possible Cause	Diagnosis	How to Fix
Excessive Engine Oil Consumption/ Smoke (Bluish White)	Excess oil in Engine	Engine oil is filled excessively	Drain and refill oil to correct specifications. Replace oil filter. Inspect and clean air box and breather hoses for excess oil.
	Engine oil is contaminated	Engine oil is NOT as per Royal Enfield recommendation	Drain oil, replace oil filter and fill fresh engine oil as per Royal Enfield recommendation.
	Engine oil looks too black/highly viscous	Engine oil is not changed as per recommended maintenance schedule	Drain oil, replace oil filter and fill fresh engine oil as per Royal Enfield recommendation.
	Relief valve in oil pump malfunction	Remove and inspect oil pump relief valve	Remove oil pump and clean OR replace the relief valve.
	Valve stem seal failure	Valve stem seal(s) is cracked OR loose in valve guide	Inspect Stem seals; if defective replace full set.
	Valve stem to valve guide clearance is excess	Valve guides worn out excessively	Inspect valve stem guide. If the clearance is out of specification; replace head assembly.

Symptom	Possible Cause	Diagnosis	How to Fix
Excessive Engine Oil Consumption/ Smoke (Bluish White)	Valve stem is scuffed/scored	Valve stem seal(s)is cracked OR worked loose from valve guide	Inspect Stem seals; if defective replace full set.
	Piston rings are stuck in piston ring grooves	Wet/excessive carbon build up in ring grooves in piston/on rings	Release piston ring(s) carefully from piston ring groove(s), clean and replace with new rings. Inspect cylinder for damages.
	Piston rings are worn out	Excessive gap in piston rings at the end in cylinder barrel	Inspect piston rings and cylinder barrel for excessive wear out. Replace piston rings/piston with rings. Replace cylinder barrel assembly if cylinder barrel is worn out.
	Piston is seized in cylinder barrel	Piston is scuffed, damaged OR partially seized in cylinder barrel	Inspect cylinder barrel for damages/heavy scoring and replace piston assembly AND/OR cylinder barrel if required.

Symptom	Possible Cause	Diagnosis	How to Fix
Excessive Engine Oil Consumption/ Smoke (Bluish White)	Partial seizure of engine internals	Connecting rod is partially seized in crank shaft assembly	Dismantle engine, inspect all internal parts, replace as required and reassemble engine.
		Journal bearings/crankshaft/balancer shafts are seized	
Engine Noise Top End	Exhaust gas leak between cylinder head and exhaust pipe	Exhaust pipe(s) flange mounting nuts are loose AND/OR seal is deformed OR damaged	Dismantle exhaust pipe(s) from cylinder head; replace gasket and tighten flange mounting to specified torque.
	Excessive wear-out of Camshaft journals	Camshaft journal is partially seized OR scored	Inspect and replace cylinder head.

Symptom	Possible Cause	Diagnosis	How to Fix
Engine Noise Middle	Cam chain tensioner is defective	Cam chain tensioner spring/cam chain pad are worn-out OR broken	Replace cam chain tensioner pad assembly.
	Piston rings are stuck in piston groove	Wet/excessive carbon is build up in the ring grooves in piston/on rings	Release piston ring(s) carefully from piston ring groove(s), clean and replace with new rings.
	Piston rings are worn out	Excessive gap in piston rings at the end in cylinder barrel	Inspect piston rings and cylinder barrel for excessive wear out. Replace piston rings/piston with rings. Replace cylinder barrel assembly if cylinder barrel is worn out.
	Excessive clearance between Piston and barrel	Inspect Piston to Barrel clearance for given specs	Replace entire set of cylinder piston and barrel assembly.
	Connecting rod small end to piston pin clearance is excess	Remove and inspect if the piston pin is loose OR scored OR seized	Replace the piston pin AND/OR connecting rod as required.
	Connecting rod is bent	Remove and inspect valve timing; check if valve is stuck OR damaged and if the connecting rod is bent OR twisted	Replace the connecting rod AND/OR stem valve and affected parts.
Engine Noise Bottom	Crankshaft journal bearing is worn-out/partially seized	Remove and inspect the bearing code and crankshaft. Check for scores OR seizures	Refer the crank shaft journal bearing code selection chart. Check the oil gallery. Replace the journal bearings and crankshaft if required.
	Connecting rod big end journal bearing is worn-out/partially seized	Remove and inspect oil circulation and the connecting rod bigger end bearing	Refer the connecting rod bearing code selection chart. Check and replace the connecting rod big end bearing.
	Balancer shaft journal bearing is worn-out/ partially seized	Remove and inspect the balancer shaft and journal bearing	Refer balancer shaft bearing code selection chart. Check and replace the balancer shaft bearing and replace if defective.

Symptom	Possible Cause	Diagnosis	How to Fix
Engine Noise Bottom	Clutch slipper spring is deformed OR broken	Remove and inspect clutch slipper spring for breakage	Replace the clutch slipper spring if worn-out.
	Clutch outer hub collar bush/needle bearing is defective	Remove and inspect if the clutch outer hub collar bush/needle bearing is worn out	Replace the affected parts.
	Clutch friction plate lugs/clutch outer hub slots are defective	Remove and inspect if clutch friction plate lugs/ clutch outer hub slots are worn-out OR damaged	Check and replace the friction plates and affected parts.
	Drive shaft bearing is worn out	Remove and inspect for noisy drive shaft bearing OR excess play	Check and replace the bearing/drive shaft assembly.

Symptom	Possible Cause	Diagnosis	How to Fix
Engine Noise Bottom	Drive shaft bush is worn out	Remove and inspect for drive shaft bush wear-out OR excess play	Check and replace the bush and shaft if worn out.
	Counter shaft bearing is worn out	Remove and inspect for the noisy counter shaft bearing	Check and replace the counter shaft bearing and shaft if worn out.
	Counter shaft bush is worn out	Remove and inspect counter shaft bush for any wear-out OR excess play	Check and replace the counter shaft bush and shaft if worn out.
	Excessive clearance between splines and gears	Remove and inspect splines and gears for any wear-out OR excess play	Check and replace the gear splines and gears.

Symptom	Possible Cause	Diagnosis	How to Fix
Engine Vibration	Engine mounting fasteners to main/cradle frame are loose	Check all mounting fasteners for looseness/ stripped OR washed out threads/broken mountings/fasteners	Ensure engine mounting fasteners are tightened at specified torque to the main/cradle frame. Check the mounting for any cracks OR damages. Check if the adjuster and bush are as per specifications.
	Engine steady bracket is loose	Check fasteners for looseness/stripped/washed out threads/broken mountings/fasteners	Ensure engine steady bracket mounting is free of cracks. Ensure that fasteners are tightened to main frame to the specified torque.
	Silencer mounting is loose	Inspect silencer (LH/RH) mountings, mounting cub washers and brackets for cracks OR loose ends. Inspect if tightening torque with cylinder head and silencer pipe brackets to frame torque is as per specs	Ensure silencer (LH/RH) mountings points, mounting cub washers and brackets are free of cracks OR loose ends. Tighten all mounting fasteners to specified torque. Ensure exhaust pipe mounting flange nuts are correctly tightened to cylinder head.

Symptom	Possible Cause	Diagnosis	How to Fix
Engine Vibration	Foot pegs are loose	Check foot peg mounting fasteners for looseness/stripping/washed out threads/broken fasteners	Tighten foot pegs to specified torque and replace defective parts.
	Balancer shaft/crankshaft run-out	Dismantle engine and check balancer shaft for any run out/bearings damage	Replace affected bearings/balancer shaft.
Clutch is Spongy/Soft	Clutch inner cable is partially damaged	Inspect clutch cable top & bottom ends for damaged inner cable	Replace Clutch cable.
	Clutch has excess free play	Clutch cable free play is more than specs at handle bar end	Adjust clutch free play to 2-3mm.
	Engine oil has lost viscosity	Check if engine oil is contaminated and too thin	Drain oil, replace oil filter and fill fresh engine oil as per Royal Enfield recommendation.

Symptom	Possible Cause	Diagnosis	How to Fix
Clutch is Spongy/Soft	Clutch activating lever assembly is loose on clutch shaft	Check if clutch lever clamping bolts are loose	Tighten clamping bolt on clutch lever as per specs.
		Inspect splines on clutch shaft and lever for splines damage/worn out	Replace clutch lever and shaft.
	Clutch springs are weak	Inspect clutch release springs for pre-setting/ length reduction	Inspect clutch springs for correct free length and replace if out of specs.
	Clutch springs are broken	Inspect clutch springs for any damages	Replace clutch springs.
	Clutch friction plates have become soggy	Inspect clutch friction plate material for softness/ damages/puffed up condition	Replace clutch friction plate/steel plates.
	Clutch center/hub is worn out	Inspect clutch center and hub splines area for damages/wear out	Replace clutch assembly.
	Clutch assembly center nut is loose	Inspect if clutch center fixing nut is loose/threads are washed out	Replace nut/main shaft.

Symptom	Possible Cause	Diagnosis	How to Fix
Clutch is Hard	Clutch inner cable is stuck/has hard movement in outer cable	Inspect inner clutch cable for free movement in outer cable	Lubricate clutch cable and inspect for free movement. If problem still exists, replace clutch cable.
	No free play in clutch lever at handle bar end	Clutch cable free play is less than specs	Adjust clutch free play to 2-3mm.
	Engine is contaminated	Engine oil is not changed as per recommended maintenance schedule OR Engine oil is NOT as per Royal Enfield recommendation	Drain oil, replace oil filter and fill fresh engine oil as per Royal Enfield recommendation.
	Excess Oil in Engine	Engine oil is filled excessively	Drain and refill oil to correct specifications.
	Clutch lever movement is sticky in cover RH	Check free movement of clutch shaft in cover RH	Remove clutch shaft from cover RH, inspect, lubricate and reassemble.
		Check if clutch shaft is seized in cover RH	Replace clutch shaft in cover RH.

Symptom	Possible Cause	Diagnosis	How to Fix
Clutch Slip	Clutch has excess free play	Inspect clutch cable top & bottom ends for frayed strands of the inner cable	Replace clutch cab;e if damaged. Adjust clutch free play to 2-3mm.
	Clutch lever movement is sticky in cover RH	Check free movement of clutch shaft in cover RH	Remove clutch shaft from cover RH, inspect, lubricate and reassemble.
		Check if clutch shaft is seized in cover RH	Replace clutch shaft in cover RH.
	Clutch springs are weak	Inspect clutch release springs for presetting/ length reduction	Replace if out of specs.
	Clutch springs are broken	Inspect clutch springs for any damages	Replace clutch springs.
	Clutch friction plates have become soggy	Inspect clutch friction plate material for softness/ damages/puffed up condition	Replace clutch friction plate/steel plates.
	Clutch center/hub is worn out	Inspect clutch center and hub spline area for damages/wear out	Replace clutch assembly.
	Clutch assembly center nut is loose	Inspect if clutch center fixing nut is loose/threads are washed out	Replace nut/main shaft.

Symptom	Possible Cause	Diagnosis	How to Fix
Clutch juddering	Clutch cable is brittle	Inspect clutch cable top & bottom ends for frayed strands of the inner cable	Replace clutch cable.
	Clutch lever movement is sticky in cover RH	Check free movement of clutch shaft in cover RH	Remove clutch shaft from cover RH, inspect, lubricate and reassemble.
		Check if clutch shaft is seized in cover RH	Replace clutch shaft in cover RH.
	Uneven wear of clutch friction plates	Friction plates OR steel plates are worn-out, warped OR dragging	Remove clutch friction and steel plates. Inspect, lubricate and reassemble. Replace if necessary.
	Clutch steel plate movement on clutch hub is abrupt		
	Clutch steel plate warped	Check if steel plate is warped OR worn-out	Remove clutch steel plates, inspect, lubricate and reassemble. Replace if necessary.
	Clutch release spring is sticky	Inspect if the clutch release spring is not releasing properly	Remove, inspect and replace.
Noise in Clutch	Clutch Spring is broken	Inspect if the clutch is also broken	Replace the spring and clutch if required.
	Clutch outer hub collar bush/needle bearing is worn-out	Inspect if Clutch outer hub collar bush/needle bearing for damages	Replace hub collar bush AND/OR needle bearing.
	Clutch friction plate lugs/clutch outer hub slots are worn out	Inspect clutch friction plate and outer hub for damages	Replace Clutch friction plate lugs AND/OR clutch outer hub.
Down-Shift/Up-Shift Travel Is Excessive	Gear link is defective	Inspect if the gear link is worn out	Remove, lubricate link and reassemble. Replace if necessary.

Symptom	Possible Cause	Diagnosis	How to Fix
Gear is Hard to Shift	Gear shift stopper is defective	Inspect gear shift stopper roller for wear-out/ damage	Remove and lubricate shifter and reassemble. Replace if necessary.
	Gear shift stopper spring is defective	Inspect gear shift spring for preset/breakage	Replace the spring.
Gear is under engaged condition	Shifter fork movement is sticky	Inspect if shifter fork has sticky movement in spindle/selector drum	Replace the shifter fork.
Gear Engagement is Hard	Oil level is low/engine oil has lost viscosity	Engine oil is contaminated and too thin	Drain oil, replace oil filter and fill fresh engine oil as per Royal Enfield recommendation.
	Excessive clutch free play	Clutch cable free play is more than specs at handle bar end	Adjust free play and replace clutch cable if necessary.
	Gear shaft is bent	Inspect if the gear shaft is sticky OR bent	Replace gear shaft.
	Shifter fork movement and selector drum are sticky	Inspect shifter fork free movement in selector drum	Replace the selector drum.
	Sliding gear movement on counter-shaft/drive shaft is sticky	Inspect if gear sliding is sticky	Replace sliding gears on counter shaft and drive shaft.
	Gear shift stopper movement is sticky	Inspect if shifter fork stopper is worn-out	Remove, lubricate and reassemble shifter fork. Replace if necessary.
	Gear shift shaft is bent/stuck	Remove and inspect shaft run-out	Replace gear shaft.

Symptom	Possible Cause	Diagnosis	How to Fix
Gear Engages and Slips	Gear shift stopper is worn-out	Inspect gear shift stopper	Remove, lubricate shifter and reassemble. Replace if necessary.
	Gear shift stopper spring is broken	Inspect gear shift spring for preset/breakage	Check and Replace the spring.
	Sliding gear dogs are worn-out	Inspect sliding gear dogs	Remove and replace if necessary.
Gear is not Engaging	Engine oil has lost viscosity	Engine oil is contaminated and too thin	Drain oil, replace oil filter and fill fresh engine oil as per Royal Enfield recommendation.
	Gear teeth are broken	Inspect gear teeth	Remove, inspect and replace gear and affected parts.
	Gear shift stopper is jammed	Inspect the movement of the stopper	Remove, inspect and replace the stopper id necessary.
	Selector fork is jammed on spindle	Remove and check the fork in the drum	Check, lubricate and reassemble OR replace if required.
	Selector fork is jammed in selector drum	Check for free traveling of the fork in the selector drum	Replace the drum and affected parts.
	Gear shift shaft is bent/stuck	Dismantle and check the run-out	Replace the gear selector shaft.
Gear Lever is not Returning After Shifting	Gear shift shaft spring is broken	Check operation of gear selector shaft spring AND/OR lock	Remove and replace the spring.
	Gear shift shaft is bent/stuck	Inspect gear shift shaft guide movement	Replace gear shift shaft and affected parts.

Symptom	Possible Cause	Diagnosis	How to Fix
Noise in Gear Box	Engine oil has lost viscosity	Engine oil is contaminated and too thin	Drain oil, replace oil filter and fill fresh engine oil as per Royal Enfield recommendation.
	Gear teeth are broken	Inspect gear teeth	Remove, inspect and replace gear and affected parts.
	Drive shaft bearing is worn-out	Check the bearing sound and wear-out	Dismantle, inspect the drive shaft bearing and replace.
	Drive shaft bush is worn out	Check the bush play and seating	Remove, inspect and replace drive shaft push.
	Counter shaft bearing is worn out	Check if the counter shaft bearing has excess play	Remove, inspect and replace counter shaft bearing and shaft if required.
	Counter shaft bush is worn out	Check if the counter shaft bush is worn-out OR has excess play	Remove, inspect and replace counter shaft bush and shaft if required.
	Excessive clearance between splines and gears	Check if clearance is as per specifications	Remove, inspect and replace the affected parts.

AIR FILTER BOX ASSEMBLY

CONTENTS PAGE

6.1 Air Filter Box Assembly..... 235

Dismantling..... 235

6.1.1 Air Filter Element..... 235

6.1.2 Air Filter Box Assembly 235

Inspection 238

Assembly 239

6.1.3 Air Filter Box Assembly 239

6.1.4 Air Filter Element 241

Troubleshooting 242

6.1 Air Filter Box Assembly

Dismantling

CAUTION
Ensure the motorcycle is upright on a firm and flat surface.

⚠ CAUTION
Be careful while connect and disconnect the electrical couplers. Do not damage pins of the couplers.

- Ensure ignition switch and engine stop switch are in OFF position.

6.1.1 Air Filter Element

Prior Removal:

- Remove the fuel tank.
- Remove the rider and pillion seats.
- Loosen and remove **3 Nos** allen head screws **(M5) (a)** from air filter box cover.

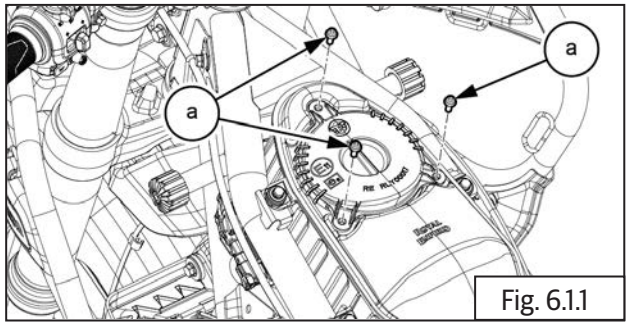

Fig. 6.1.1

	4mm Allen key

- Remove the cover **(a)** from air filter box.

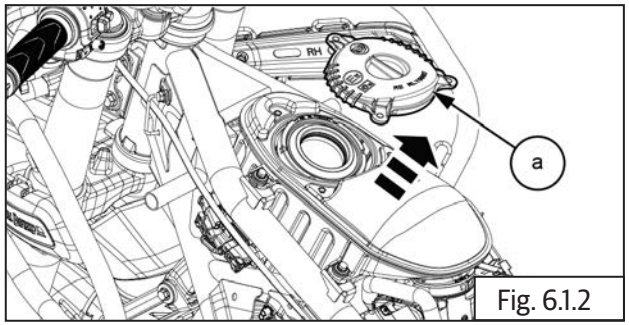

Fig. 6.1.2

- Gently pull out air filter element **(a)** from air filter box assembly.

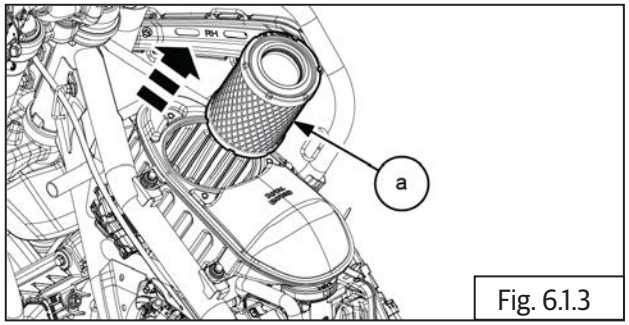

Fig. 6.1.3

- Remove the "O" ring from air filter box cover.

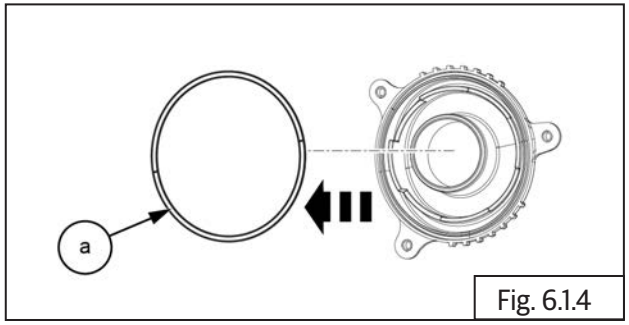

Fig. 6.1.4

	Connector

6.1.2 Air Filter Box Assembly

- Remove the clamp **(a)** from bottom breather hose.
- Detach the breather hose from engine .

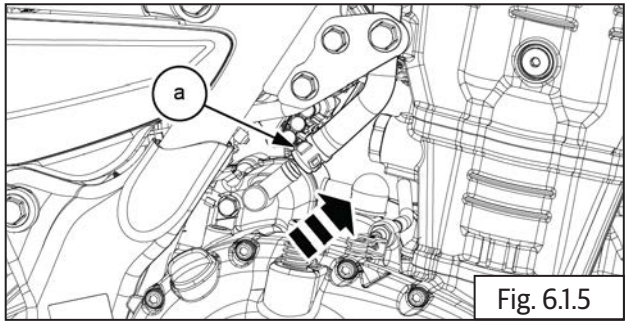

Fig. 6.1.5

	Plier

- Remove the clamp **(a)** from air filter bellow hose.

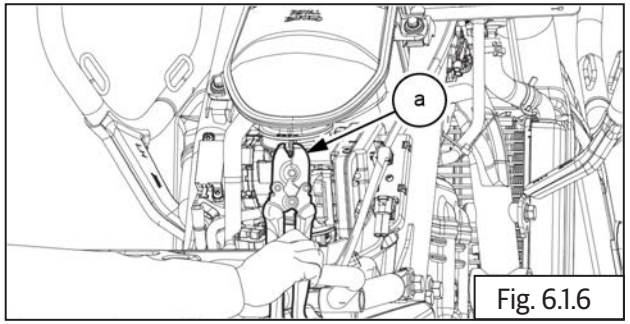

Fig. 6.1.6

	Clamp Removal and install tool

- Loosen and remove 3 Nos Hex flange bolts **(a) (M6)** from air filter box.

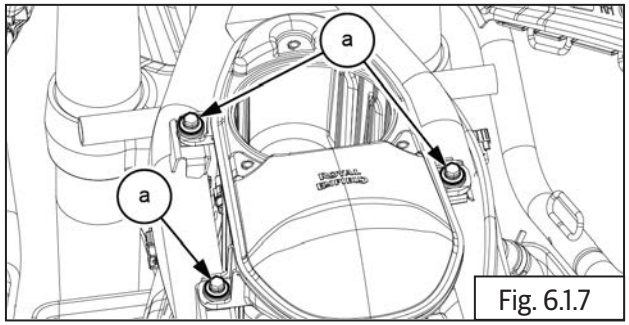

Fig. 6.1.7

	8 mm socket with ratchet

- Remove 3 Nos sleeves **(a)** with grommets **(b)** from air filter box.

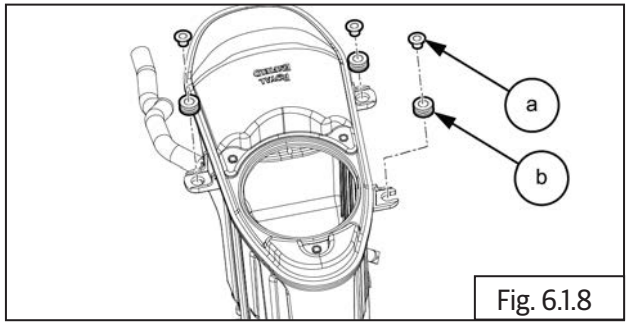

Fig. 6.1.8

- Slightly lift the air filler box **(a)** to access the ignition coil connector.

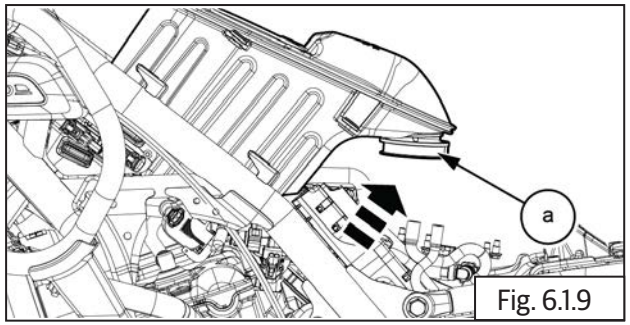

Fig. 6.1.9

- Remove spark plug cap **(a)** from engine.

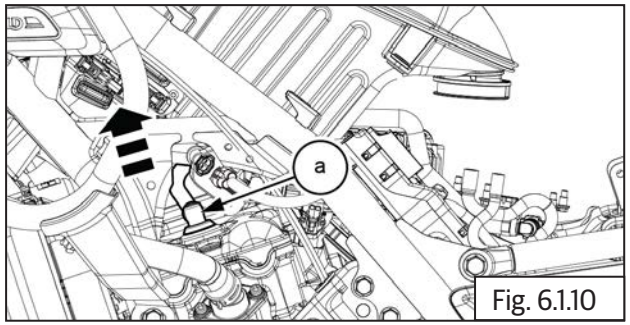

Fig. 6.1.10

- Disconnect the **2 Nos** ignition coil couplers **(a)**.

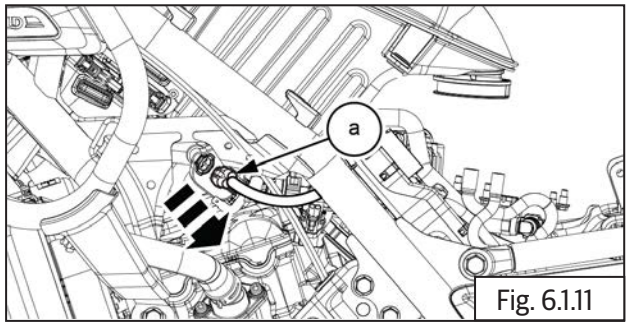

Fig. 6.1.11

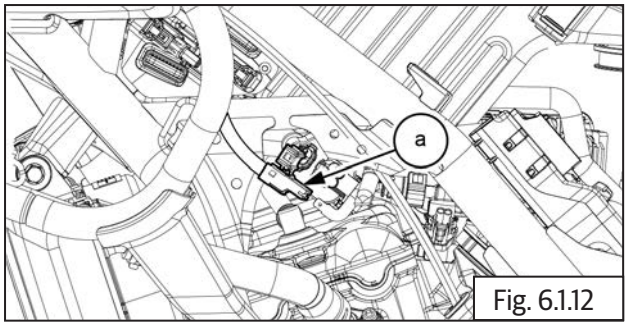

Fig. 6.1.12

- Remove air filter box **(a) with** ignition coil.

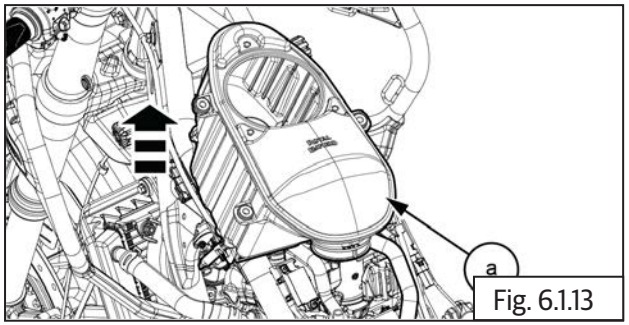

Fig. 6.1.13

- Remove **2 Nos** cap head screws **(M6)** from ignition coil **(a)**.
- Remove ignition coil with high tension cable from air filter box **(b)**.

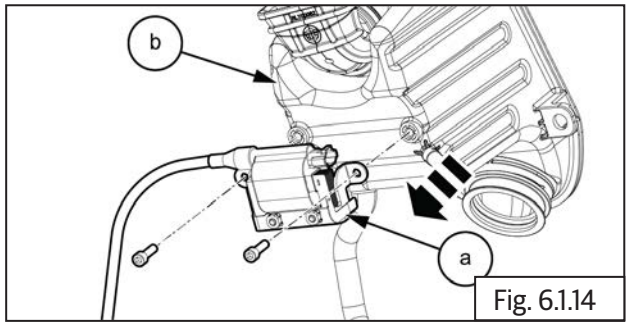

Fig. 6.1.14

	5mm Allen key

- Remove the clip **(a)** from inlet bellow hose **(b)**.

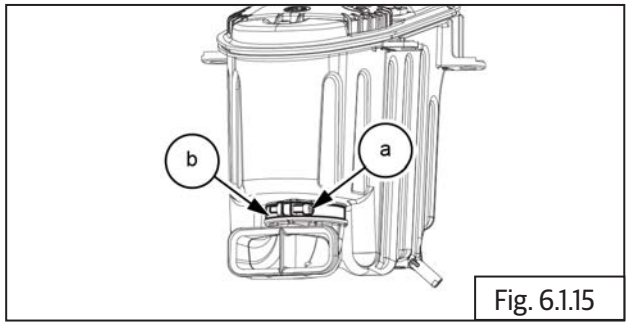

Fig. 6.1.15

	screw driver

- Remove the inlet bellow hose **(a)**.

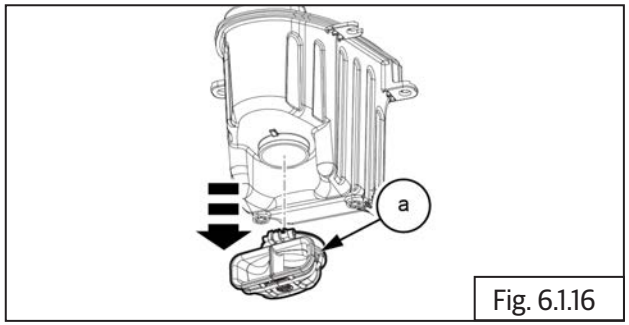

Fig. 6.1.16

- Remove the clamp **(a)** from breather hose.

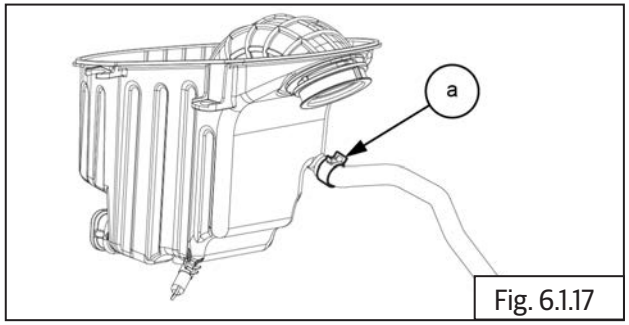

Fig. 6.1.17

	Plier

- Detach the breather hose **(a)** from air filter box.

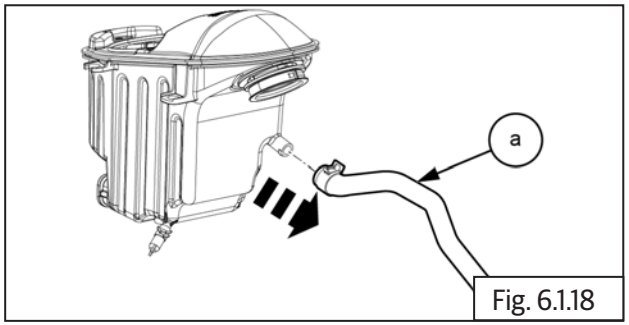

Fig. 6.1.18

- Remove the clip **(a)** from drain hose.

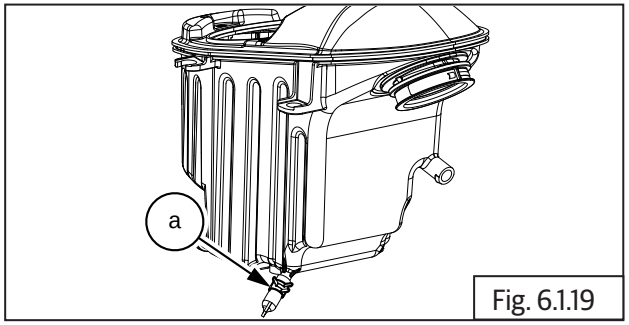

Fig. 6.1.19

	Plier

- Detach the drain hose **(a)** from bottom air filter

box.

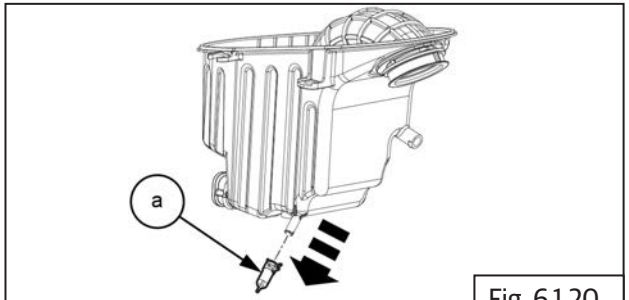

Fig. 6.1.20

	Plier

Inspection

- Inspect air filter box assembly for any damages or cracks.
- Inspect air intake bellows for any damages, cracks and/or brittleness of the bellows.
- Inspect rubber seals, hoses for cuts, cracks or damages. Replace seals and rubber parts whenever they are removed.
- Inspect air filter element carefully for any deformation, damages, heavy clogging with dirt, soggy condition, and/or foreign particles embedded in the element. Replace if any of these conditions are observed.

Clean

- Clean air filter element **(a)** based on the periodic maintenance schedule OR more frequently if motorcycle is used in dusty/off-road conditions.
- Gently tap filter element with minimum force to dislodge heavy/embedded dust particles.
- Using low pressure compressed air, blow air from out side to inner side to remove fine dust particles.

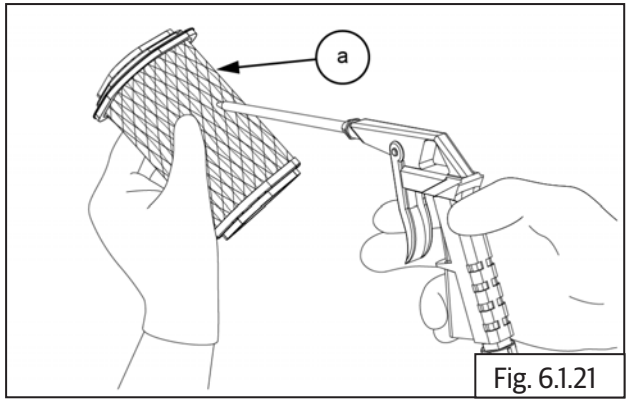

Fig. 6.1.21

	Air gun

CAUTION
DO NOT wash the element in water, gasoline or any solvents.

- Clean the air filter housing internals, with a soft damp cloth to remove dust.
- Check and Clean the inlet bellow hole if blocked.

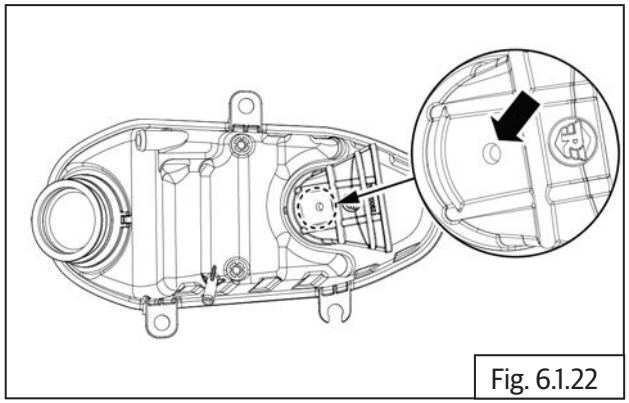

Fig. 6.1.22

Replace

- Replace O-rings, rubber bellow hoses, clips parts etc., Whenever air filter assembly is serviced.
- Replace air filter element as per the periodic maintenance schedule.
- Should not reuse the damaged O - Ring.

6.1.3 Air Filter Box Assembly

- Fix the drain hose **(a)** on bottom air filter box.

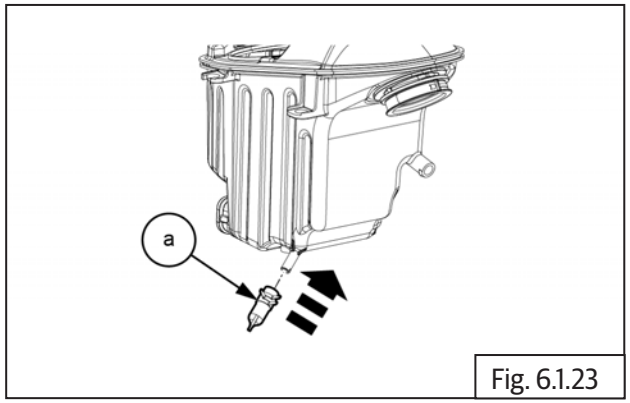

Fig. 6.1.23

- Fix the clip **(a)** on drain hose.

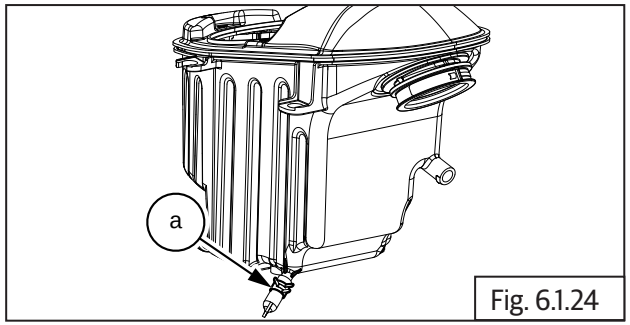

Fig. 6.1.24

	Plier

- Fix the breather hose **(a)** to air filter box.

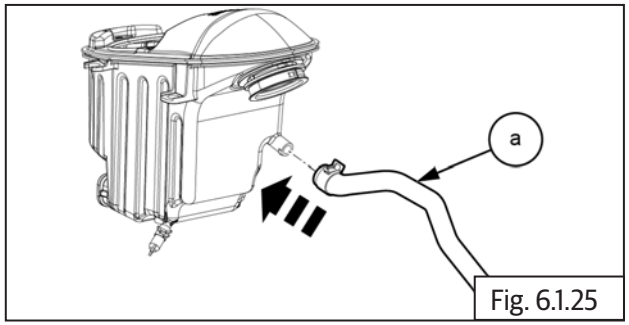

Fig. 6.1.25

- Fix the clamp **(a)** to breather hose.

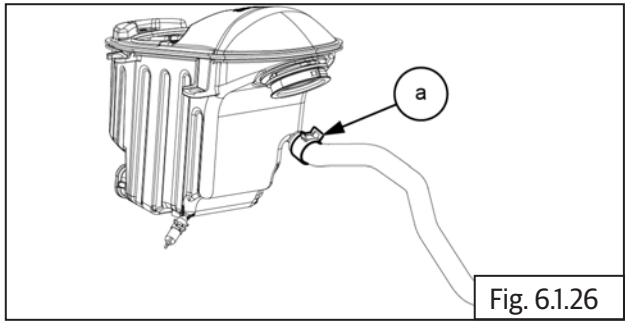

Fig. 6.1.26

	Plier

- Fix the inlet bellow hose with clip **(a)**.

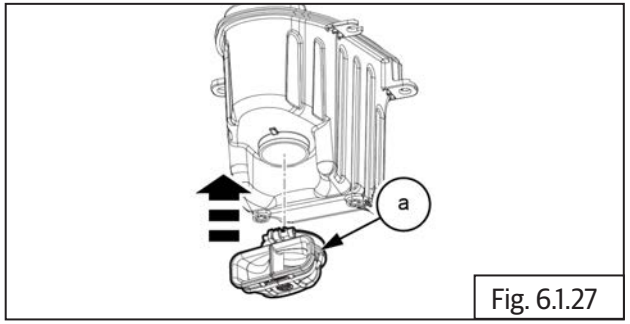

Fig. 6.1.27

	Screw driver

- Locate the ignition coil with high tension cable on air filter box **(b)**.
- Locate and tighten **2 Nos** cap head screws **(M6)** on ignition coil **(a)**.

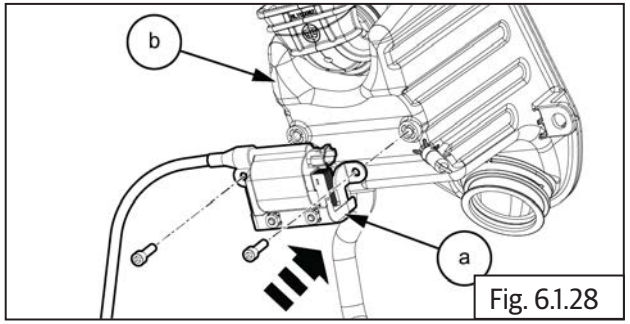

Fig. 6.1.28

	5mm Allen key and Ratchet
Torque	3 to 4 N·m -/ 0.3 to 0.4 kgf-m

- Locate the air filter box **(a) with** ignition coil on front chassis frame.

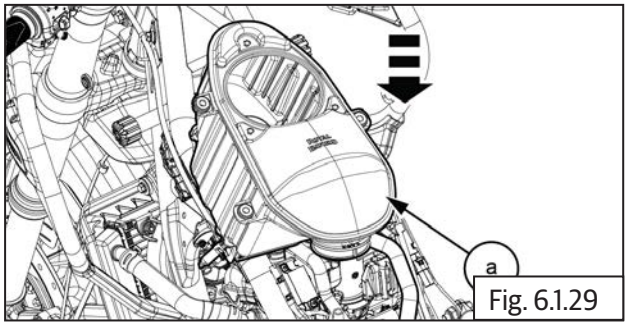

Fig. 6.1.29

- Connect the **2 Nos** ignition coil couplers **(a)**.

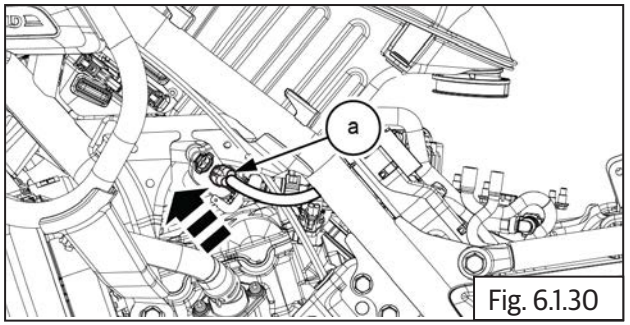

Fig. 6.1.30

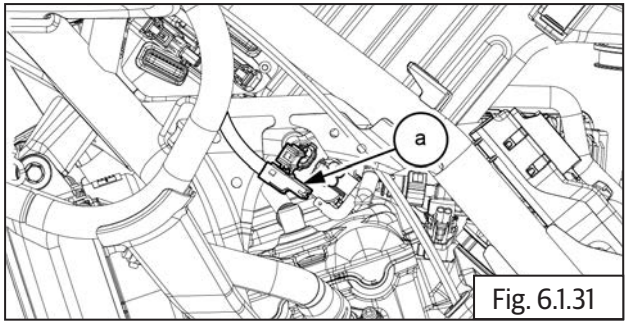

Fig. 6.1.31

- Connect spark plug cap **(a)** on engine.

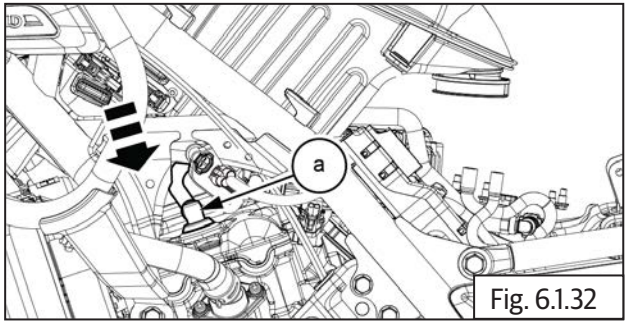

Fig. 6.1.32

- Fix **3 Nos** sleeves **(a)** with grommets **(b)** on air filter box.

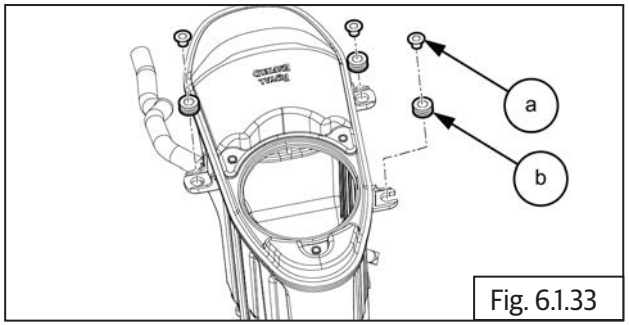

Fig. 6.1.33

- Locate and tighten **3 Nos** Hex flange bolts **(a) (M6)** on air filter box.

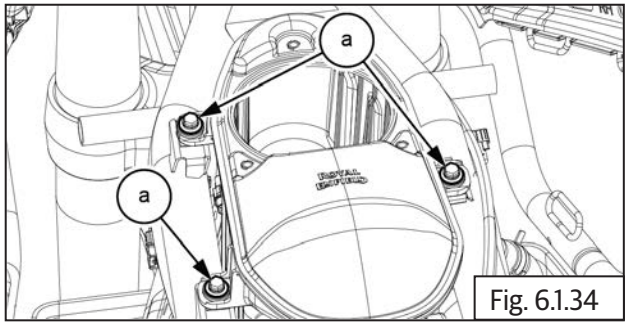

Fig. 6.1.34

	8 mm socket with ratchet
Torque	3 to 4 N·m / 0.3 to 0.4 kgf-m

- Fix the clamp **(a)** on air filter bellow hose.

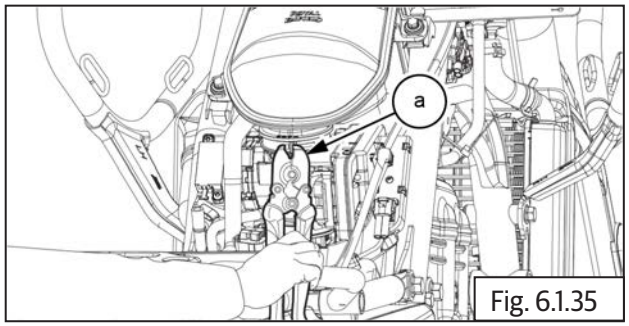

Fig. 6.1.35

	Clamp Removal and install tool

- Connect the breather hose **(a)** to engine.

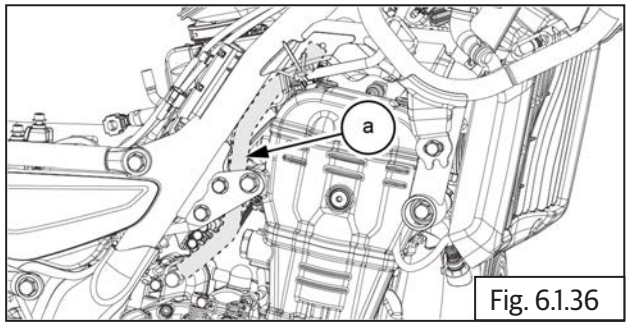

Fig. 6.1.36

- Fix the clamp **(a)** to bottom breather hose.

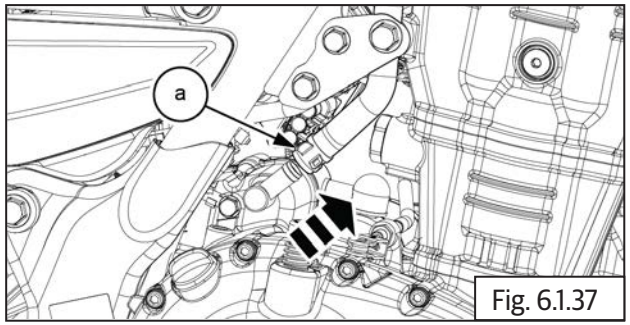

Fig. 6.1.37

	Plier

6.1.4 Air Filter Element

- Fix the "O" ring **(a)** on air filter box cover.

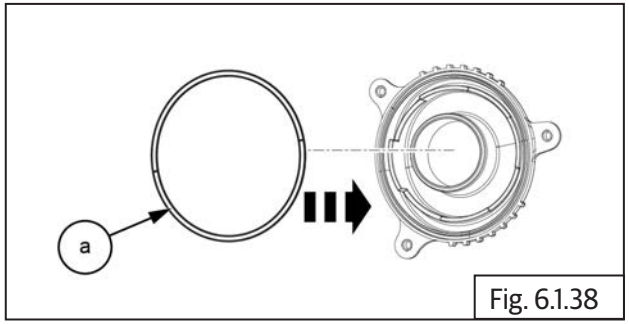

Fig. 6.1.38

- Locate the air filter element **(a)** into air filter box assembly.

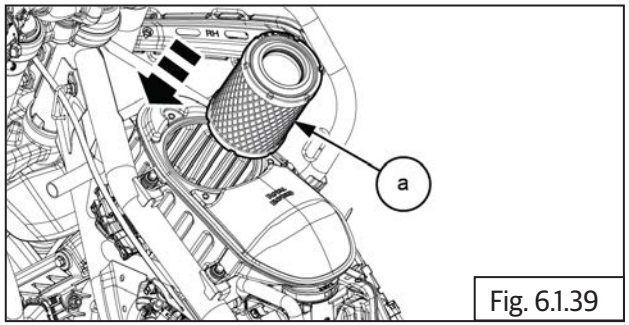

Fig. 6.1.39

- Locate the cover **(a)** on air filter box.

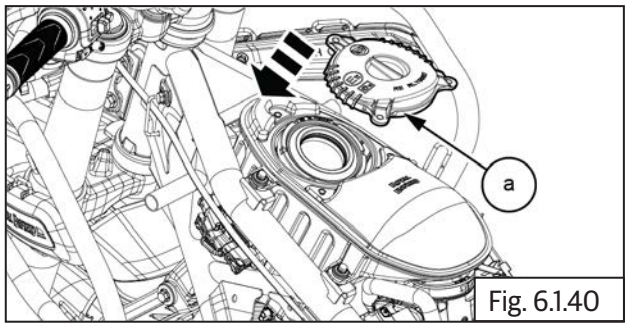

Fig. 6.1.40

- Locate and tighten the **3 Nos** allen head screws **(M5)(a)** on air filter box cover.

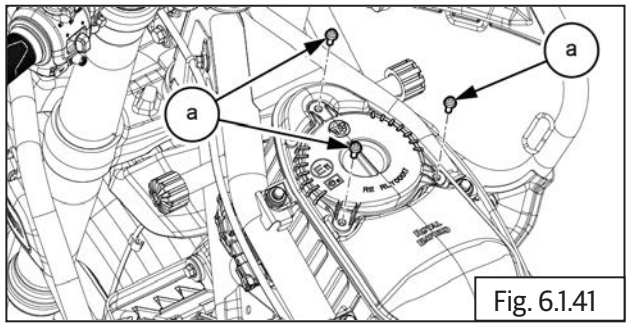

Fig. 6.1.41

	4mm Allen key

⚠ CAUTION

Do not over tighten the screws or use excessive force as it will damage the cover and the air filter box assembly.

- Install the fuel tank.
- Install the rider and pillion seats.

Troubleshooting

Symptom	Possible Cause	Diagnosis	How to Fix	Recommended Specification
Air induction noise from air filter box is high.	Air filter element cover not sealing properly on air filter box assembly.	Air filter element cover not seated properly on air filter box assembly/improperly tightened.	Check proper seating of the air filter element cover on air filter box assembly.	
	Air filter element cover cracked.	Air filter element cover cracked due to improper assembly/over tightened.	Replace air filter Element cover assembly.	
	Air filter box assembly cracked/damaged.	Air filter box assembly not aligned properly and tightened/damaged due to stone hit.	Replace air filter box assembly.	
	Hoses connecting to inlet manifold cracked.	Cracked due to age hardening/improper assembly.	Replace air filter box assembly.	
Engine running very sluggish and pick up poor.	Filter element choked.	Filter element choked with dirt/water/oil.	Check and replace filter element.	
Engine misfiring/running lean/idling improper.	Filter element damaged.	Damaged due to mishandling/heavy particles entering air filter box assembly.	Check and replace filter element.	
Engine oil accumulation inside air filter box assembly.	Excessive oil in sump.	Check and maintain correct engine oil level.	Clean breather chamber and hose leading to air filter box assembly.	

HANDLEBAR

CONTENTS **PAGE**

6.2 Handlebar.....246

Dismantling.....246

6.2.1.Aggregates of Handlebar.....246

6.2.2. Handlebar 248

6.2.3. Upper Yoke 249

Inspection..... 250

Assembly..... 250

6.2.4. Upper Yoke 250

6.2.5. Handlebar..... 251

6.2.6.Aggregates of Handlebar..... 252

Troubleshooting..... 256

6.2 Handlebar

Dismantling

6.2.1.Aggregates of Handlebar

- Remove the following parts:
  - Clutch cable.
  - Brake master cylinder front.
  - Electrical connections on LH and RH handlebars.
  - Cable routing straps.
- Lift dust cup **(a)**, loosen Hex nut **(M8) (b)** and rotate rear view mirror LH in clockwise direction.

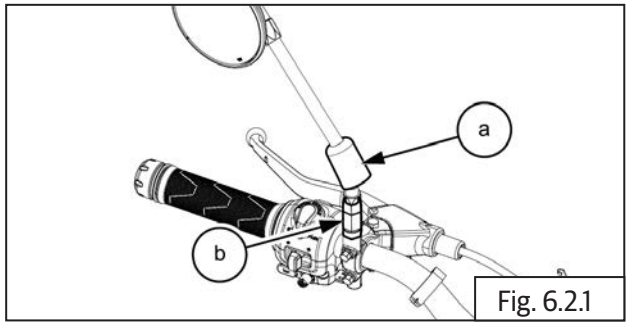

Fig. 6.2.1

	14 mm Double end spanner

⚠ CAUTION

Left hand thread!

DO NOT rotate the mirror after it comes to stop on the bracket as it will cause the bracket to crack.

Always position mirror and lock in place with rider seated on the motorcycle.

- Lift dust cup **(a)**, loosen Hex nut **(M8) (b)** and rotate rear view mirror RH in anticlockwise direction.

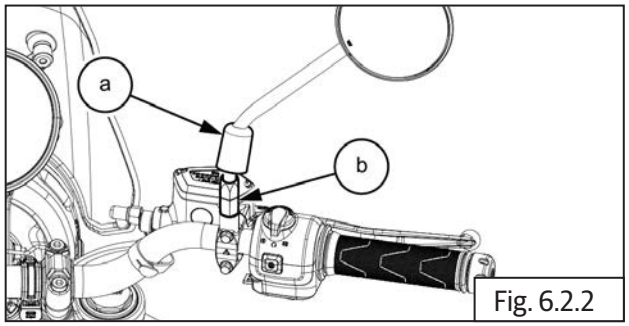

Fig. 6.2.2

	14 mm Double end spanner

- Loosen and remove the 1 No cap bolt **(M4) (a)** along with usb mount **(b)** from handlebar.

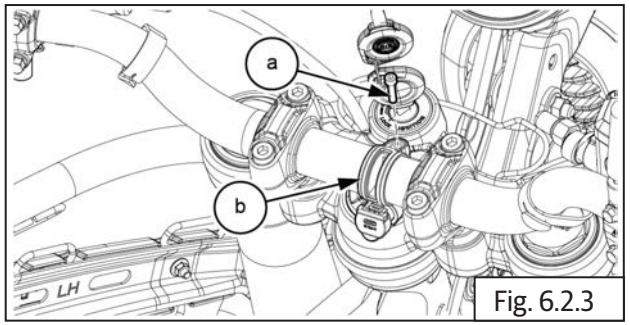

Fig. 6.2.3

	3 mm Allen key

- Loosen and remove Hex socket bolt **(M6) (a)** along with balancer **(b)** from handlebar RH.

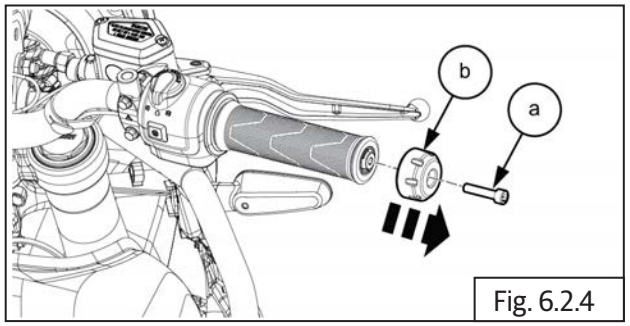

Fig. 6.2.4

	5 mm Allen key

- Loosen and remove 2 Nos. Switch module screws **(a)** from RH handlebar.

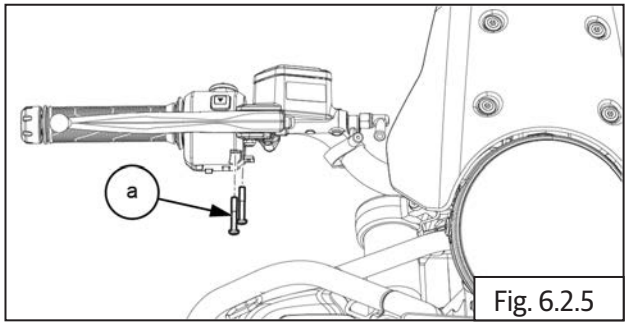

Fig. 6.2.5

	Phillips screw driver

- Gently separate switch module **(a)** top and bottom **(b)** from handlebar RH.

⚠ CAUTION
Support RH switch module carefully after removal.

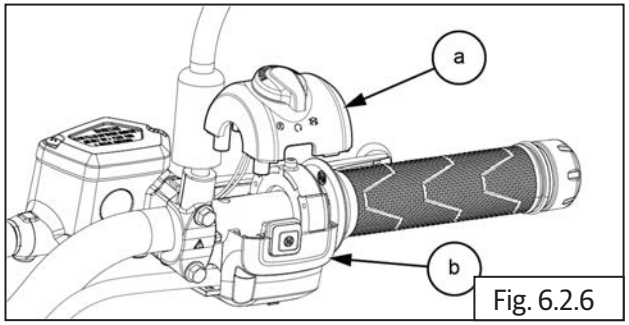

Fig. 6.2.6

- Loosen and remove 2 Nos. Hex flange head bolt **(M5) (a)** master cylinder.

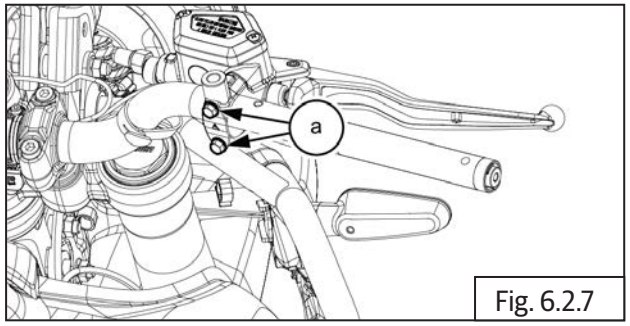

Fig. 6.2.7

	8 mm Socket with Ratchet

- Remove master cylinder assembly **(a)** along with cap **(b)** from RH handlebar.

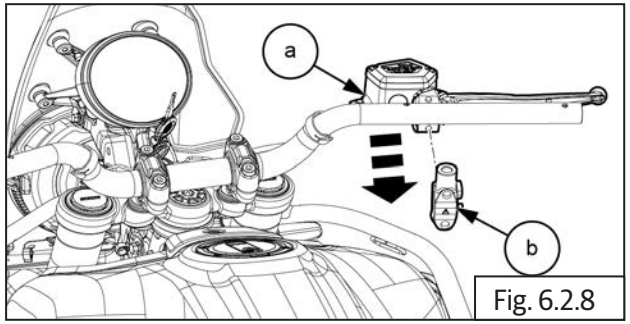

Fig. 6.2.8

⚠ CAUTION
Ensure master cylinder assembly is supported after removing.

- Loosen and remove Hex socket head bolt **(M6) (a)** along with balancer **(b)** from handlebar LH.

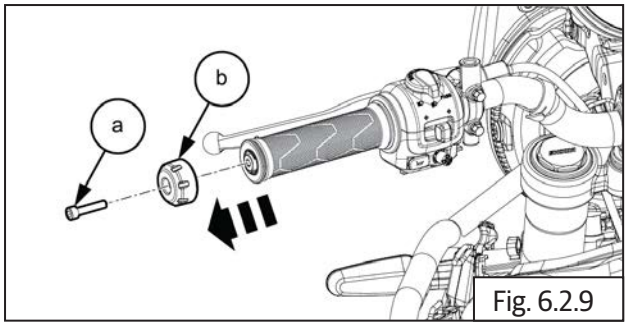

Fig. 6.2.9

	5 mm Socket with Ratchet

- Gently remove grip **(a)** from handlebar.

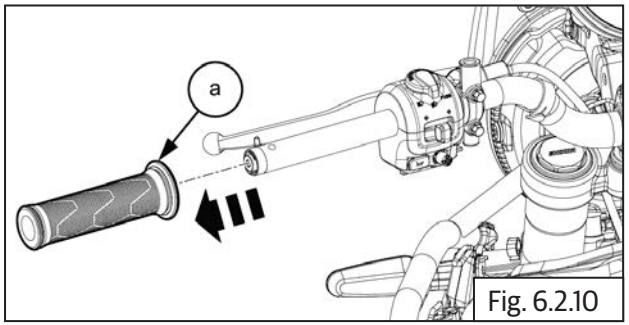

Fig. 6.2.10

- Loosen and remove 2 Nos. screws **(a)** from switch module on handlebar LH.

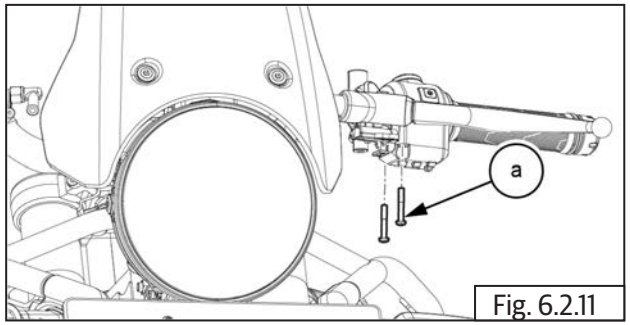

Fig. 6.2.11

	Phillips screw driver

- Disconnect clutch cable connections from handlebar LH.
- Gently separate top **(a)** and bottom **(b)** switch module and remove from handlebar LH.

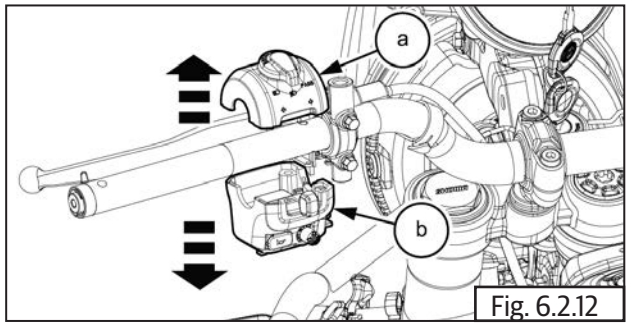

Fig. 6.2.12

- Loosen Hex flanged head bolt **(M6) (a)** from clutch lever bracket LH.

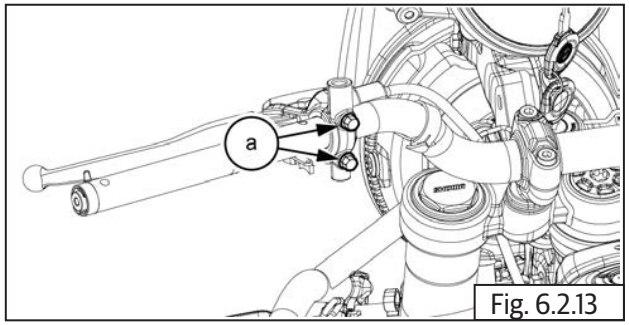

Fig. 6.2.13

	8 mm Socket with Ratchet

- Remove the clutch lever bracket LH **(a)** along with cap **(b)** from handlebar LH.

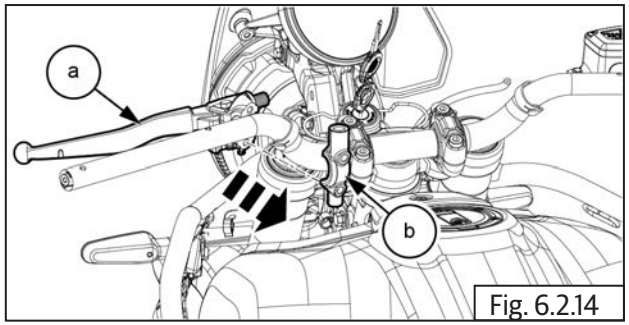

Fig. 6.2.14

- Remove the all rubber straps **(a)** from handlebar.

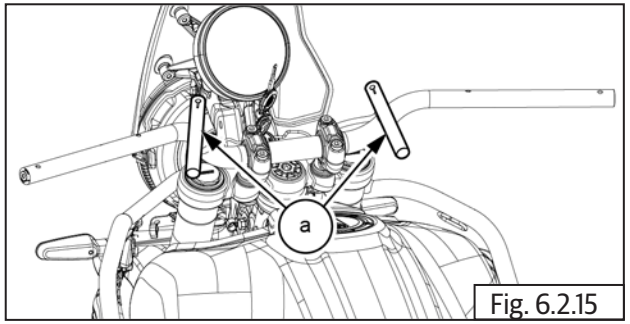

Fig. 6.2.15

6.2.2. Handlebar

- Loosen and remove 4 Nos. cap bolts **(M8) (a)** from upper clamps on handlebar.

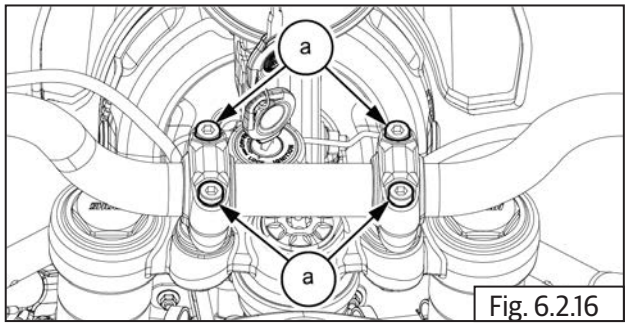

Fig. 6.2.16

	6 mm Allen socket with Ratchet

- Remove 2 Nos. upper clamps **(a)** from raiser handlebar**.**

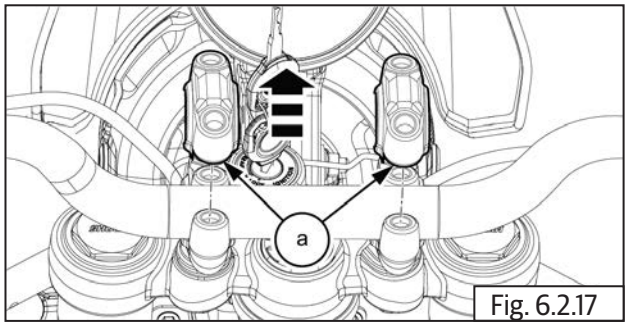

Fig. 6.2.17

- Remove handlebar **(a)** from raiser handlebar.

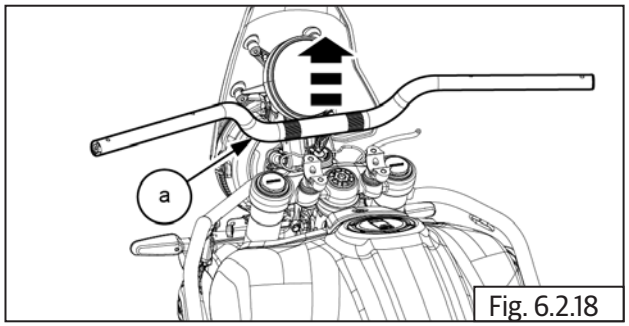

Fig. 6.2.18

- Loosen and remove 2 Nos. Hex head flanged bolts **(M10) (a)** from raiser handlebar .

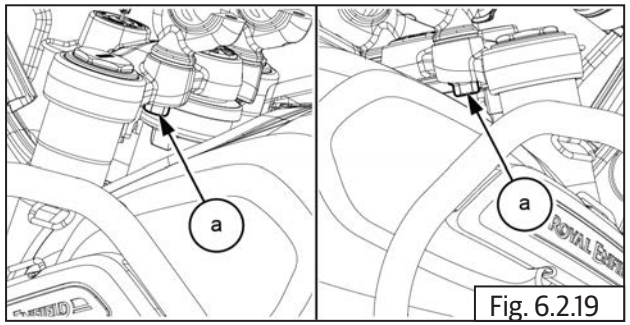

Fig. 6.2.19

	14 mm Socket with Ratchet

- Remove handlebar raiser **(a)** from upper yoke .

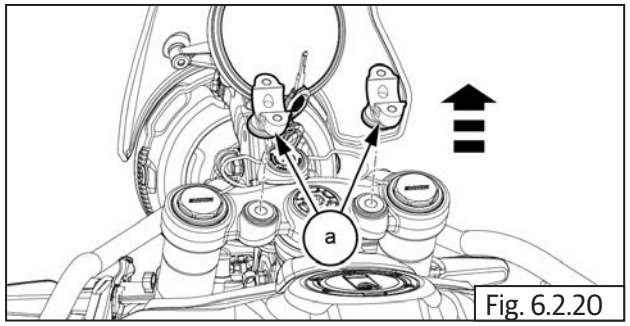

Fig. 6.2.20

- Remove flange sleeve 4 Nos **(b)** and 4 Nos rubber bush **(a)** from upper yoke.

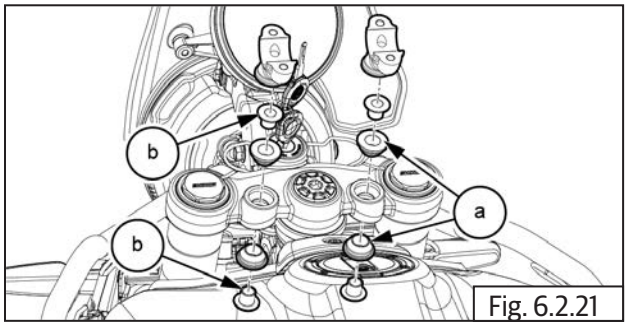

Fig. 6.2.21

6.2.3. Upper Yoke

- Remove the following parts:
  - Remove ignition switch.
  - Remove handlebar.
- Loosen and remove 2 Nos. Hex head flanged bolts **(M6) (a)** along with guide clamp **(b)** from upper yoke.

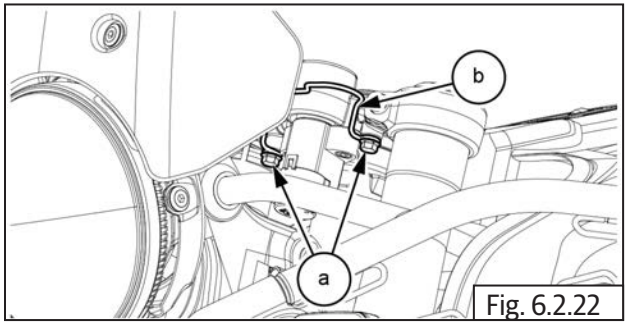

Fig. 6.2.22

	10 mm socket with Ratchet

- Loosen and remove 1 Nos. cap bolt **(M8) (a)** from LHS upper yoke.

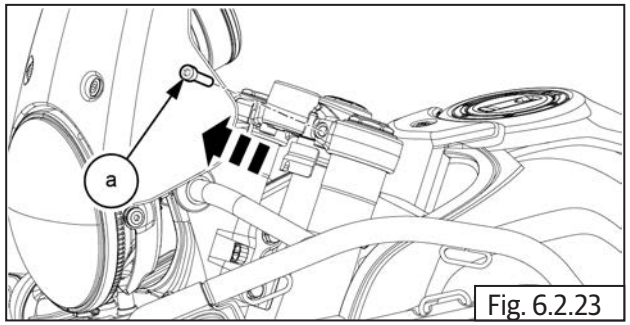

Fig. 6.2.23

	6 mm Allen socket with Ratchet

- Loosen and remove 1 Nos. cap bolt **(M8) (a)** from RHS upper yoke.

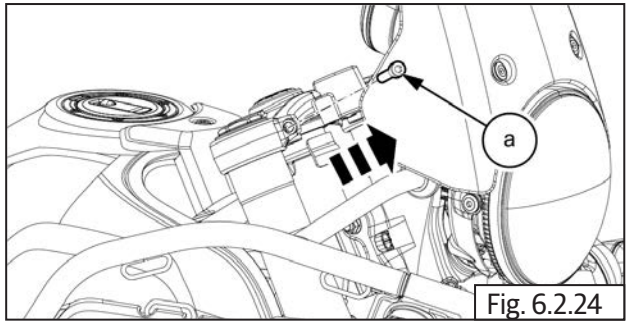

Fig. 6.2.24

	6 mm Allen socket with Ratchet

- Loosen and remove the streeing stem lock bolt **(a)** from middle upper yoke.

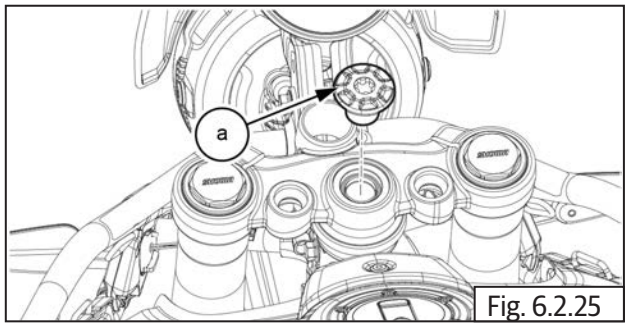

Fig. 6.2.25

	T60 Torx socket with Ratchet

- Gently tap and pull out upper yoke **(a)** from LH and RH fork assembly.

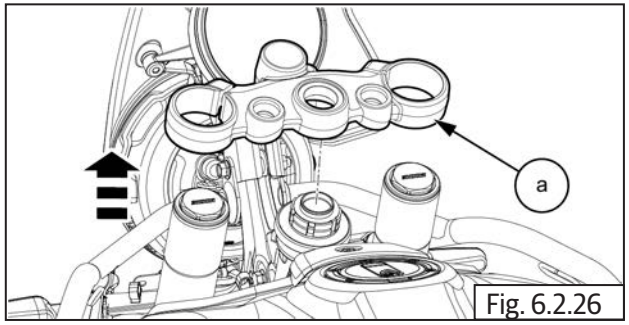

Fig. 6.2.26

Inspection

- Inspect handlebar for any bends, cracks or damages. Replace if necessary.
- Inspect rubber grip tightness and replace if it has lost grip.

Assembly

6.2.4. Upper Yoke

- Locate upper yoke **(a)** on the LH and RH fork assembly and ensure both forks seated properly in the upper yoke

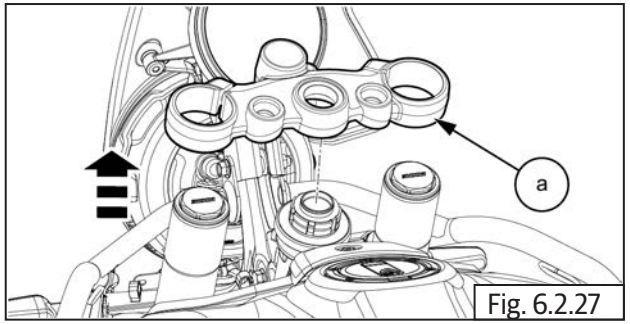

Fig. 6.2.27

- Insert and tighten 1 Nos. cap bolts **(M8) (a)** on middle upper yoke.

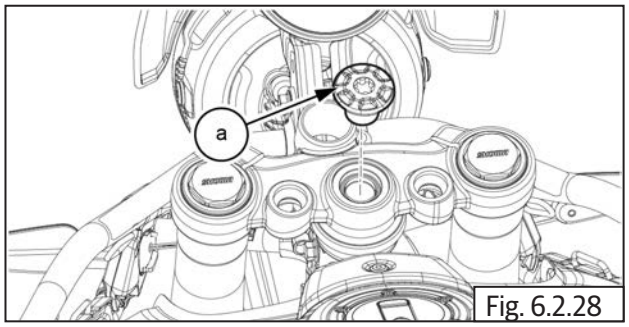

Fig. 6.2.28

	T 60 Torx socket with Ratchet
Torque	90 N-m / 9.0 kgf-m

- Insert and tighten 1 Nos. cap bolts **(M8) (a)** on RHS upper yoke.

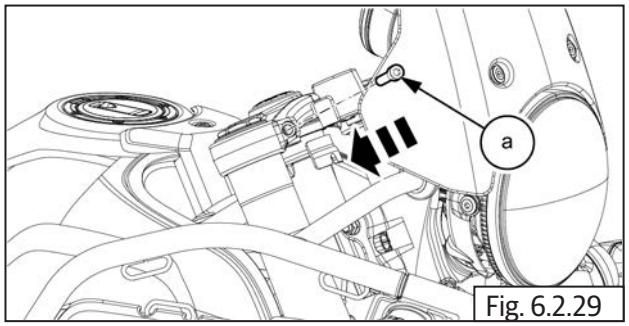

Fig. 6.2.29

	6 mm Allen socket with Ratchet
Torque	20 N-m / 2.0 kgf-m

- Insert and tighten 1 Nos. cap bolt **(M8) (a)** on LHS upper yoke.

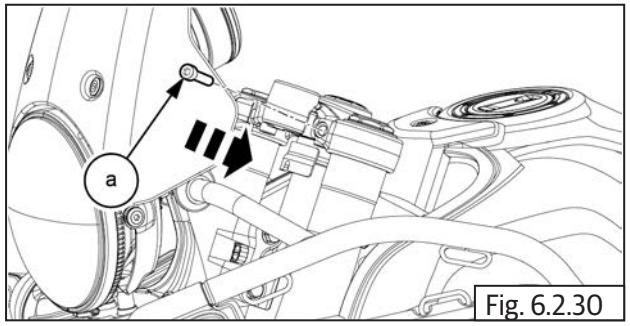

Fig. 6.2.30

	6 mm Allen socket with Ratchet
Torque	20 N-m / 2.0 kgf-m

- Locate and tighten 2 Nos. Hex head flanged bolts **(M6) (a)** along with guide clamp **(b)** into upper yoke.

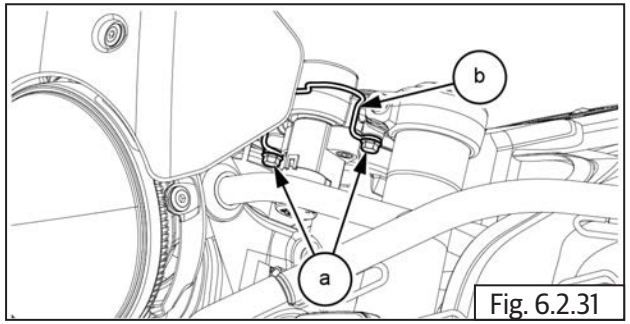

Fig. 6.2.31

	10 mm socket with Ratchet
Torque	10 N-m / 1.0 kgf-m

- Assemble the following parts:
  - Install ignition switch).
  - Install handlebar.

6.2.5. Handlebar

- Locate the flange sleeve 4 Nos **(b)** and 4 Nos rubber bush **(a)** on upper yoke.

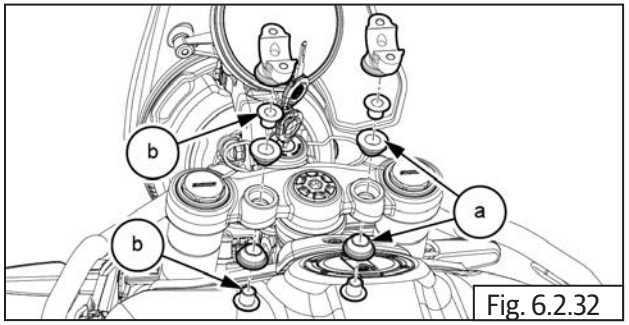

Fig. 6.2.32

- Locate raiser handlebar **(a)** into upper yoke .

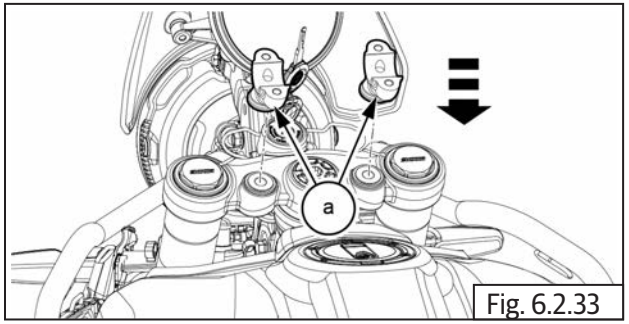

Fig. 6.2.33

- Locate and tighten 2 Nos. Hex flange head bolts **(M10) (a)** into upper yoke and raiser handlebar **.**

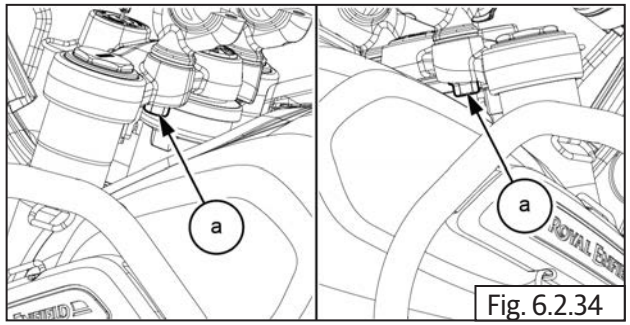

Fig. 6.2.34

	14 mm Socket with Ratchet
Torque	45 N-m/4.5 kgf-m

- Assemble handlebar **(a)** into raiser handlebar **(b).**

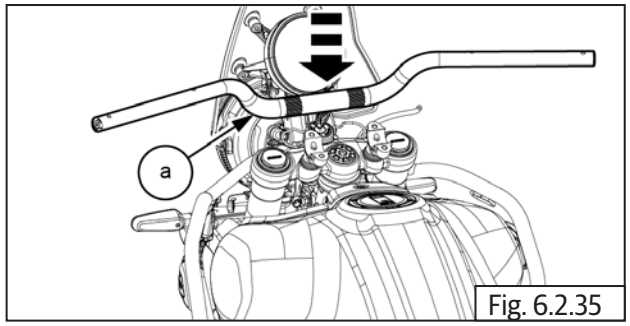

Fig. 6.2.35

- Install clamp handlebar **(a)** into handlebar.

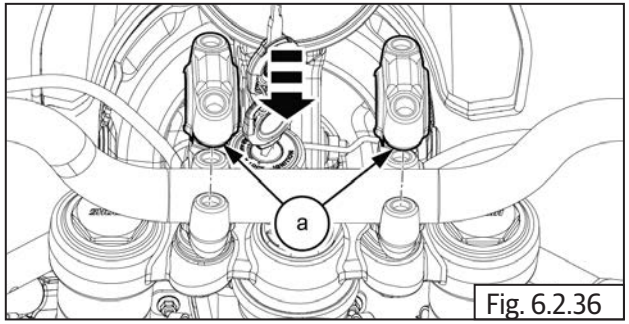

Fig. 6.2.36

NOTE
• *Ensure the steering handlebar align marks/dots are matched with clamp handlebar parallel.*

- Locate and tighten 4 Nos. cap bolts **(M8) (a)** into clamp upper handlebar.

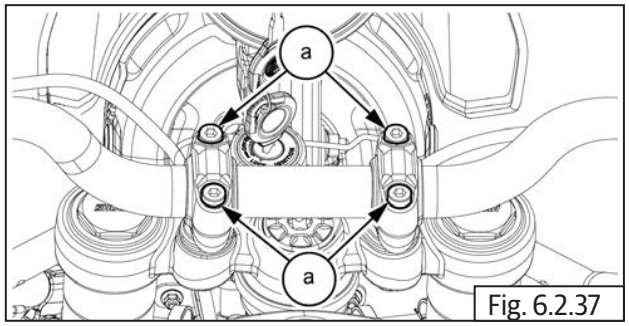

Fig. 6.2.37

	6 mm Allen socket with Ratchet
Torque	20 N-m/2.0 kgf-m

6.2.6. Aggregates of Handlebar

- Insert clutch lever bracket **(a)** on LH handlebar till the mounting hole switch module is visible.

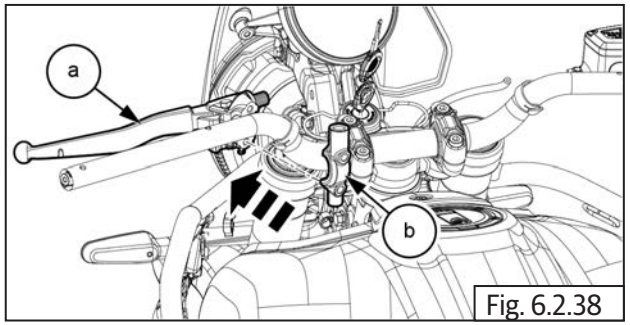

Fig. 6.2.38

- Locate and tighten Hex flanged head bolt **(M6) (a)** on clutch lever bracket LH.

NOTE
• *Top bolt to be tightened first, then the bottom one.*

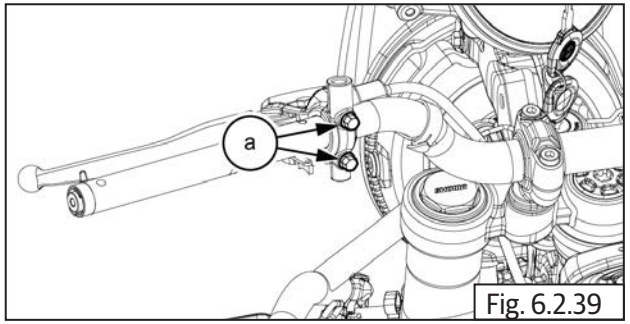

Fig. 6.2.39

	10 mm Socket with Ratchet
Torque	10 N-m / 1.0 kgf-m

⚠ CAUTION
DO NOT over tighten bolt as it will cause bracket to crack.

- Assemble switch module top **(a)** and bottom **(b)** on handlebar LH. Ensure peg **(c)** on LH switch module top half is correctly located in the hole in handlebar.

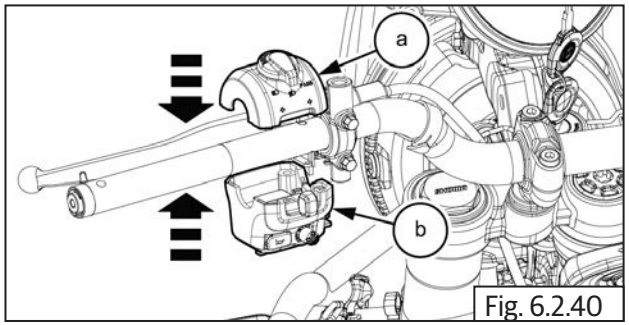

Fig. 6.2.40

- Insert the long screw **(a)** into front mounting hole of switch module LH from bottom and tighten just sufficiently.

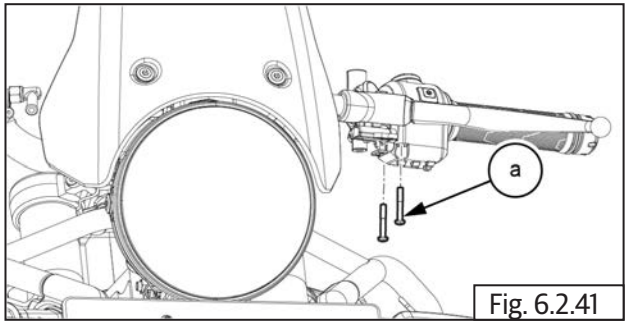

Fig. 6.2.41

⚠ CAUTION
DO NOT over tighten.

	Phillips screw driver
Torque	1.5 - 2 N-m / 0.15 - 0.2 kgf-m

- Locate and insert grip **(a)** into handlebar.

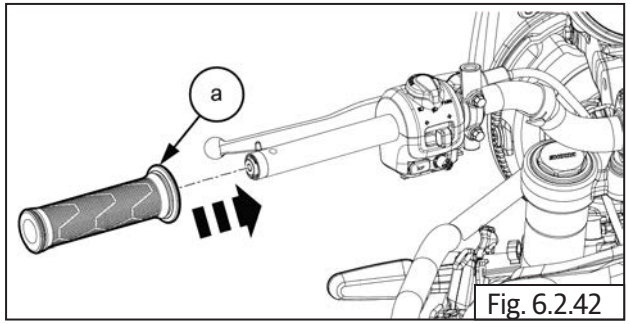

Fig. 6.2.42

- Insert and tighten Hex socket head bolt **(M6) (a)** along with balancer **(b)** into handlebar LH.

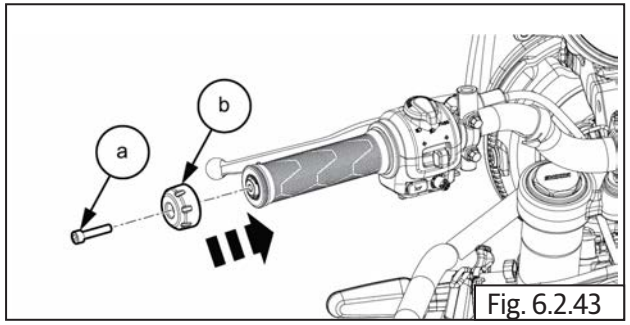

Fig. 6.2.43

	5 mm Socket with Ratchet

- Assemble clutch cable.
- Locate the master cylinder assembly **(a)** along with cap **(b)** on RH handlebar.

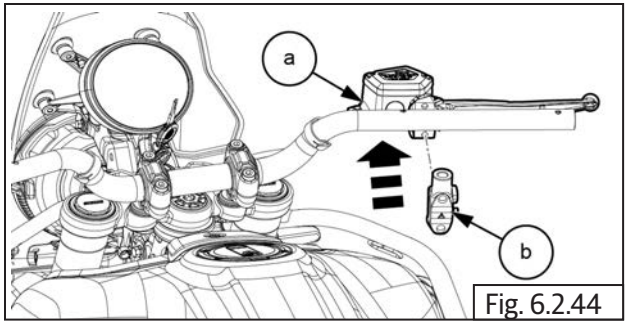

Fig. 6.2.44

- Insert and tighten 2 Nos. Hex flange head bolt **(M5) (a)** on master cylinder.

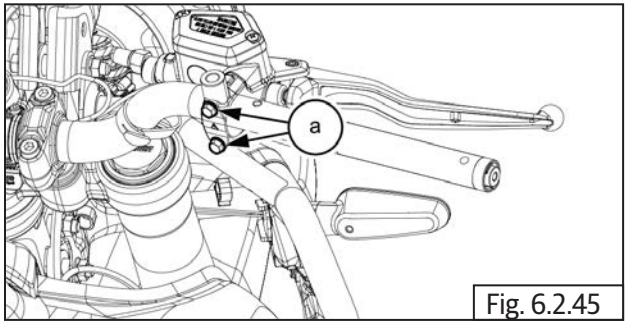

Fig. 6.2.45

	8 mm Socket with Ratchet

- Assemble switch module top **(a)** and bottom **(b)** on handlebar RH. Ensure peg on RH switch module top half is correctly located in the hole in handlebar.

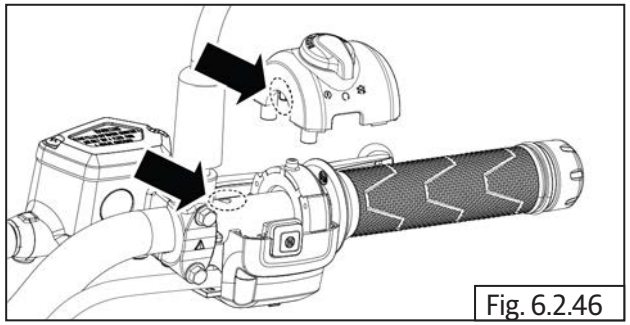

Fig. 6.2.46

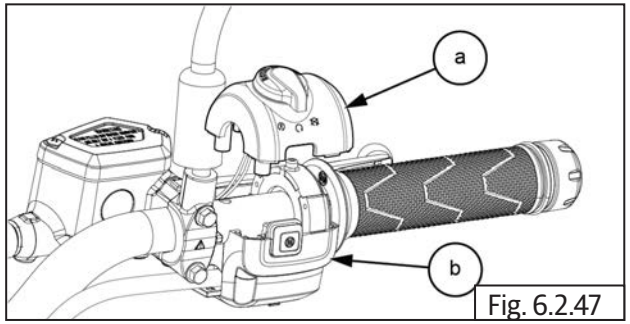

Fig. 6.2.47

- Insert 2 Nos long screws **(a)** into the front mounting hole of switch module RH from the bottom and tighten just sufficiently.

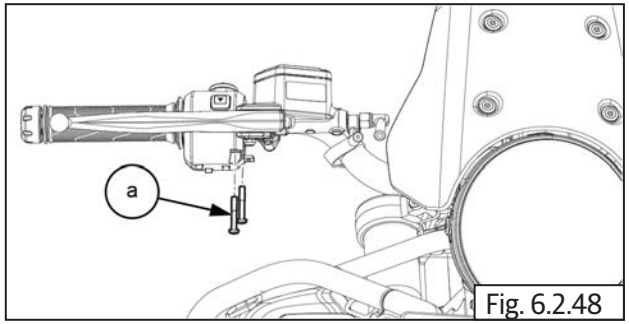

Fig. 6.2.48

⚠ CAUTION
DO NOT over tighten

	Phillips screw driver

- Insert and tighten Hex socket head bolt **(M6) (a)** along with balancer **(b)** into handlebar RH

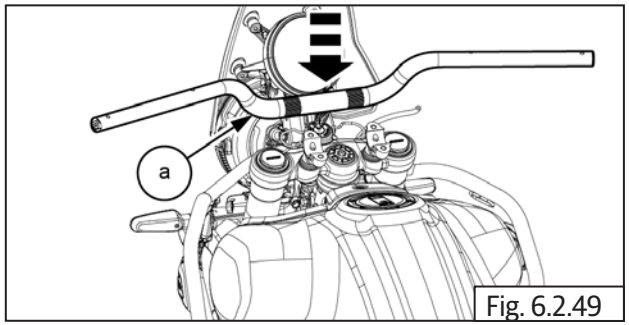

Fig. 6.2.49

	5 mm Socket with Ratchet

- Fix the all rubber straps **(a)** on handlebar.

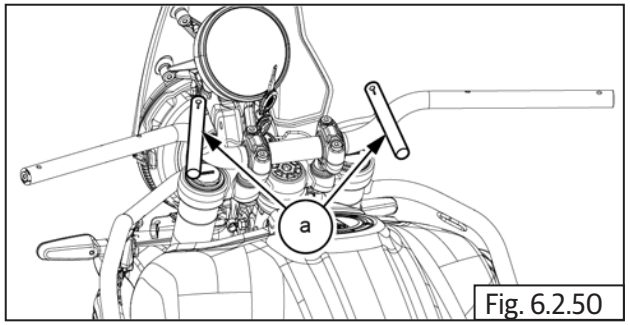

Fig. 6.2.50

- Insert and tighten the 1 No cap bolt **(M4) (a)** along with usb mount **(b)** into handlebar.

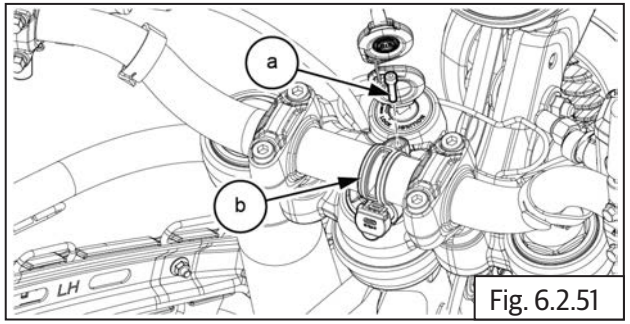

Fig. 6.2.51

	3 mm Allen Socket with Ratchet
Torque	2 N-m/0.2 kgf-m

- Ensure lock nut on mirror RH stem is fully tightened.
- Locate thread portion of rear view mirror stem **(a)** on threads on master cylinder bracket, rotate clockwise till mirror comes to stop.
- Rotate mirror clockwise for adjusting the view and tighten lock nut **(M8)** against bracket.
- Close the dust cap **(b)** .

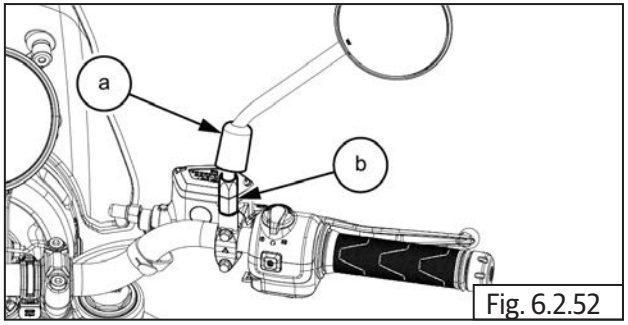

Fig. 6.2.52

	14 mm Double end spanner

⚠ CAUTION

DO NOT rotate the mirror after it comes to stop on the bracket as it will cause the bracket to crack.

Always position mirror and lock in place with rider seated on the motorcycle.

- Ensure lock nut on mirror LH stem is fully tightened.
- Locate threaded portion of rear view mirror stem **(a)** on threads on clutch lever cylinder bracket, rotate anticlockwise till mirror comes to stop.
- Rotate mirror clockwise for adjusting the view and tighten lock nut **(M8)** against bracket.
- Close the dust cap **(b)** .

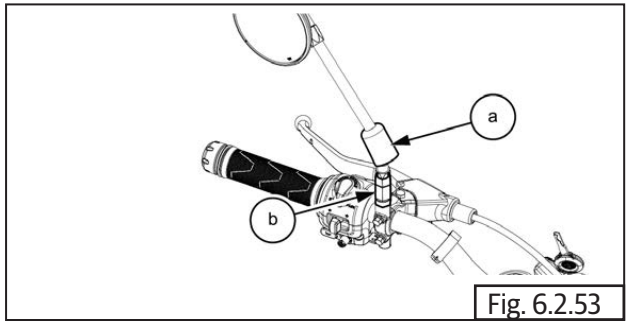

Fig. 6.2.53

	14 mm Double end spanner

⚠ CAUTION

Left hand thread

DO NOT rotate the mirror after it comes to stop on the bracket as it will cause the bracket to crack.

Always position mirror and lock in place with rider seated on the motorcycle.

- Install the following parts:
  - Clutch cable.
  - Brake master cylinder front.
  - Electrical connections on LH and RH handlebars.
  - Cable routing straps.
- After assembly, check proper functioning of electrical components.

Troubleshooting

Symptom	Possible Cause	Diagnosis	How to Fix	Recommended Specification
Vibrations transmitted to rider while riding	Tyre pressures are more than recommended.	Improper front and rear tyre pressures.	Ensure correct tyre pressures.	**Solo:** Front tyre: 32 psi/ 2.24 kg/cm2. Rear tyre: 32 psi/ 2.24 kg/cm2. **With Pillion:** Front tyre: 32 psi/ 2.24 kg/cm2. Rear Tyre: 32 psi/ 2.24 kg/cm2.
	Handlebar balancers are loose.	Balancer mountings are loose/threads are worn-out.	Tighten balancer mountings/replace balancers.	
	Clip-on pinch bolts are loose on fork main tubes. Handlebar clamp fasteners are loose on top yoke.	Fasteners loose/threads worn-out	Check and tighten fasteners/replace fasteners/handlebar clip-ons/top yoke	Torque: 20 N-m / 2.0 kgf-m Torque: 25 N-m / 2.5 kgf-m
	Handlebar is cracked at mounting location.	Clip-on/handlebar clamping locations has minor cracks.	Replace clip-ons/handlebar	
Uneasiness/pain felt on one shoulder	Handlebar is bent/misaligned.	One or the other clip-on is bent/handlebar is bent. Handlebar alignment dots are not correct.	Replace clip-ons/handlebar. Ensure correct positioning of the handlebar alignment dots with respect to top yoke.	

NOTE
• *The troubleshooting given in this section is only related to issues with Handlebar. For complaints like unstable riding, wobbling, etc., it will be necessary to check other aggregates like wheel, front/rear suspension and so on.*

SILENCER, CATBOX AND EXHAUST PIPE

CONTENTS **PAGE**

6.3 Silencer, Catbox And Exhaust Pipe 260

Dismantling..... 260

6.3.1. O2 Sensor / Oxygen Sensor Connectors (Front)..... 260

6.3.2. Silencer..... 260

6.3.3. Catbox..... 261

6.3.4. Exhaust Pipe..... 262

6.3.5. O2/Oxygen Sensor (Front)..... 263

Assembly..... 264

6.3.6. O2/Oxygen Sensor (Front)..... 264

6.3.7. Exhaust Pipe..... 264

6.3.8. Catbox..... 265

6.3.9. Silencer..... 266

6.3.10. O2 Sensor / Oxygen Sensor Connectors (Front)..... 267

6.3.11. Troubleshooting..... 269

6.3 Silencer, Catbox And Exhaust Pipe

⚠ CAUTION

DO NOT perform any operation on exhaust pipes and silencers soon after the motorcycle is OFF.

They can extremely hot and will cause serious injuries.

Always wait until the silencer is completely cooled down.

Dismantling

⚠ CAUTION

Be careful while connect and disconnect the electrical couplers. Do not damage pins of the couplers.

6.3.1. O2 Sensor / Oxygen Sensor Connectors (Front)

Prior Removal:

- Remove the fuel tank.
- Remove the air filter box.
- Detach the 1 No omega clips **(a)** from Oxygen Sensor wiring harness.

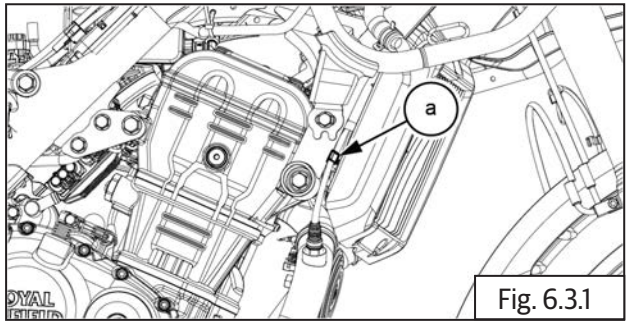

Fig. 6.3.1

	Screw driver

- Oxygen sensor coupler located on RHS chassis frame.
- Disconnect oxygen sensor connector **(a).**

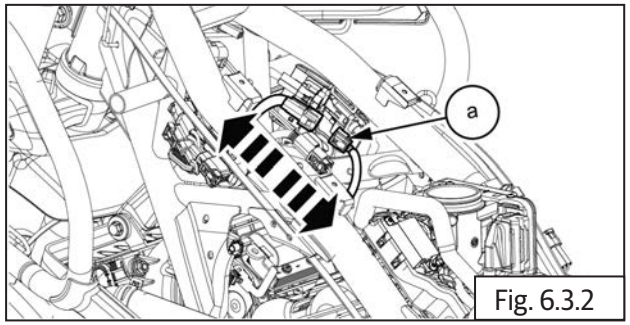

Fig. 6.3.2

6.3.2. Silencer

- Remove 2 Nos button head bolts **(M6) (a)** from rear silencer heat shield.

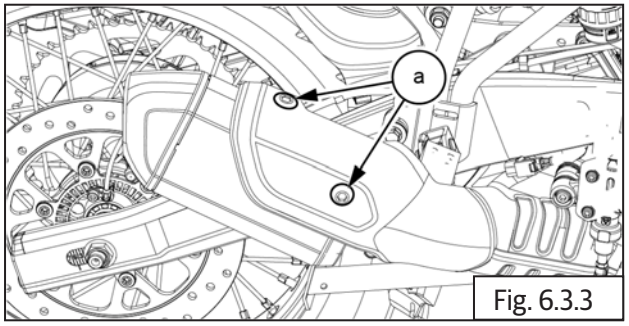

Fig. 6.3.3

	4mm Allen key

- Slightly slide backward and remove rear heat shield **(a)** from silencer.

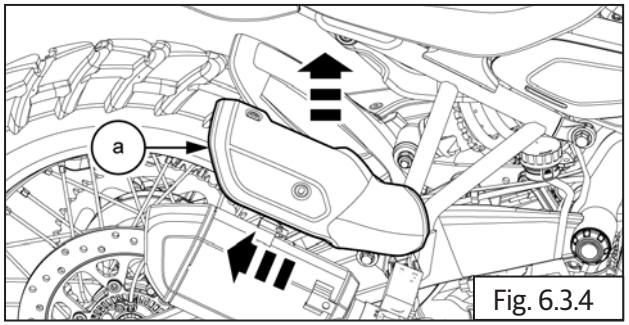

Fig. 6.3.4

- Remove guard stopper cap **(a)** from inner of the heat shield.

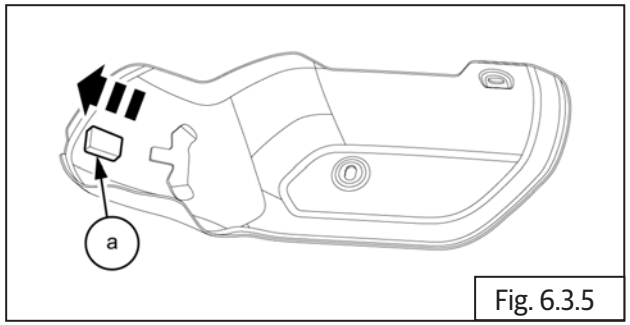

Fig. 6.3.5

	Screw driver

- Loosen hex flange bolt **(M8) (a)** from mounting clamp.

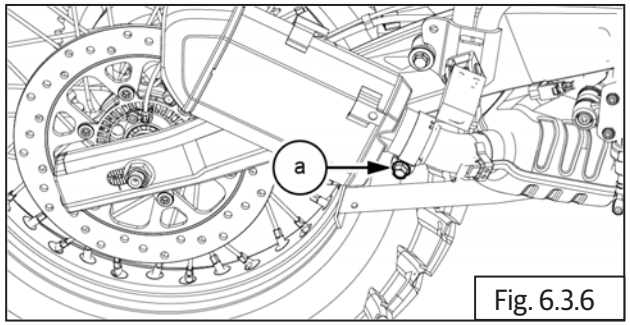

Fig. 6.3.6

	12 mm socket with ratchet

- Remove the silencer mounting bolt with nut **(M8) (a)** along with 2 Nos pins **(b)** and 2 Nos dampers **(c)** from silencer.

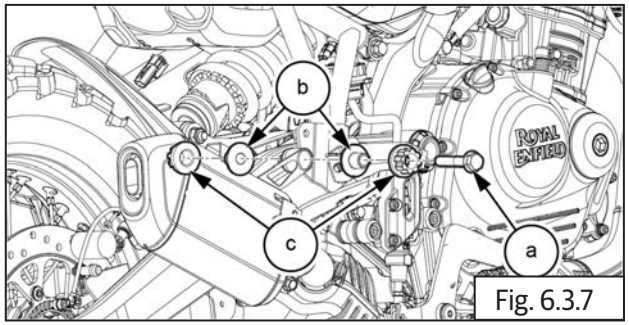

Fig. 6.3.7

	12 mm socket with ratchet

- Gently tap and pull the silencer **(a)** outwards to remove.

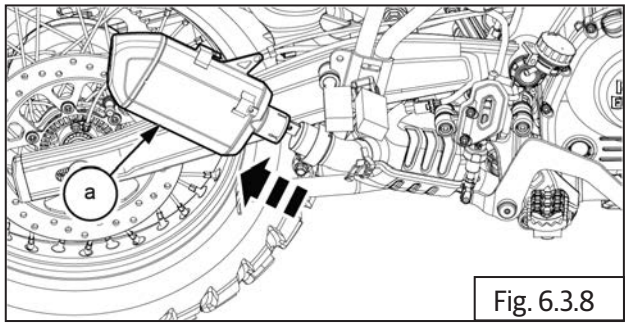

Fig. 6.3.8

	Mallet

- Remove the gasket **(a)** from Silencer and Discard it.

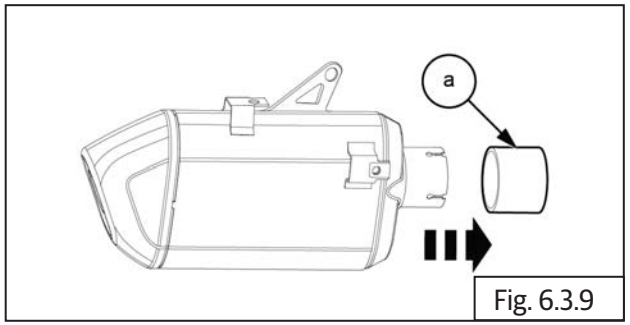

Fig. 6.3.9

	Screw driver

6.3.3. Catbox

Prior Removal:

- Remove the RHS heel guard.
- Remove the LHS heel guard.

- Loosen hex flange bolt **(M8) (a)** from mounting clamp.

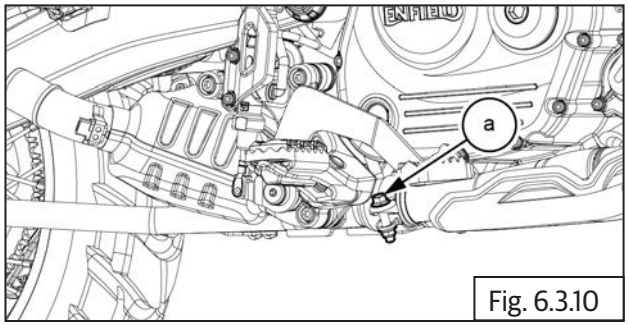

Fig. 6.3.10

	12 mm socket with ratchet

- Remove the mounting bolt **(M8) (a)** along with 2 Nos pins **(b)** and 2 Nos damper bushes **(c)** from RHS catbox.

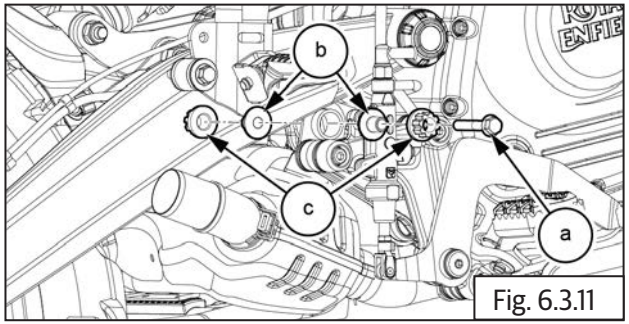

Fig. 6.3.11

	12 mm socket with ratchet

- Remove the mounting bolt **(M8) (a)** along with 2 Nos pins **(b)** and 2 Nos damper bushes **(c)** from LHS catbox.

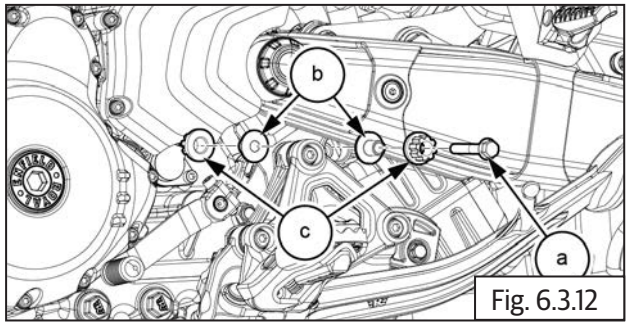

Fig. 6.3.12

	12 mm socket with ratchet

- Gently tap and pull the catbox **(a)** outwards to remove.

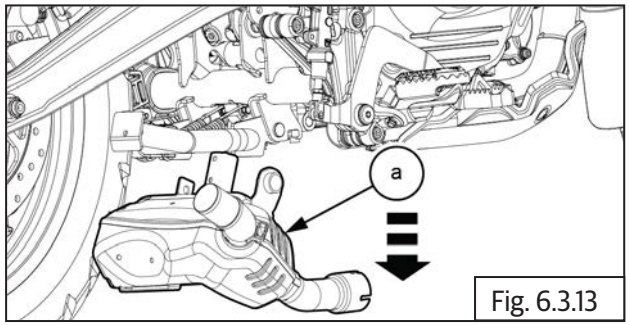

Fig. 6.3.13

	Mallet

6.3.4. Exhaust Pipe

Prior Removal:

- Remove the radiator.
- Remove 3 Nos button head bolts **(M6) (a)** from exhaust pipe guard.

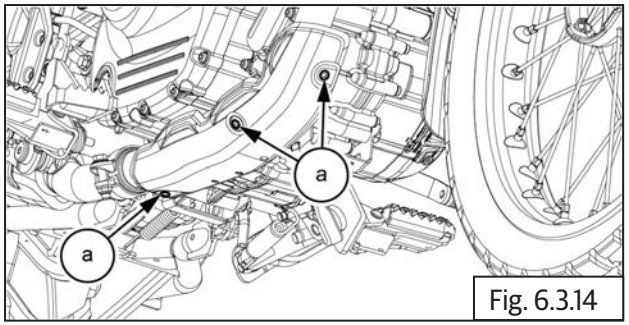

Fig. 6.3.14

	4mm Allen key

- Remove guard from exhaust pipe.

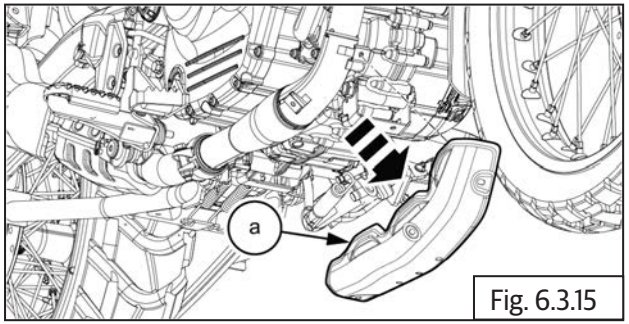

Fig. 6.3.15

- Loosen and remove 2 Nos flange nuts **(M8) (a)** from the cylinder head assembly.

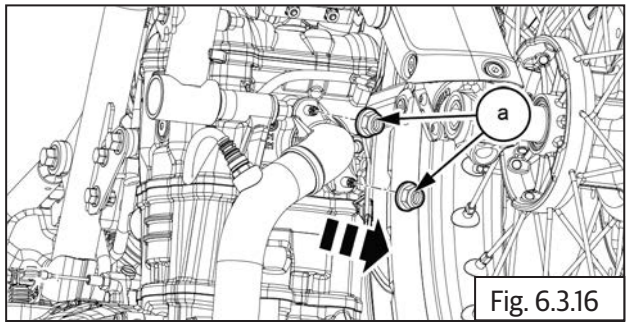

Fig. 6.3.16

	12 mm socket with ratchet

- Remove the exhaust pipe **(a)**.

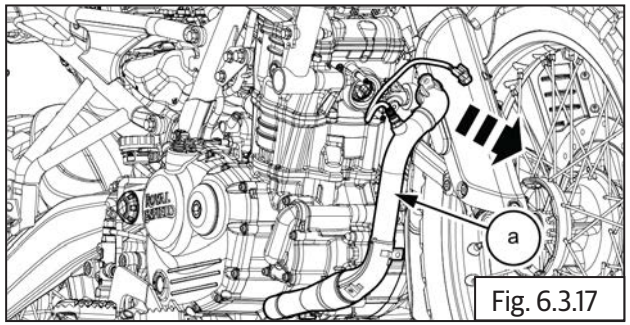

Fig. 6.3.17

- Remove the Gasket **(a)** from the exhaust pipe rear end and discard the Gasket.

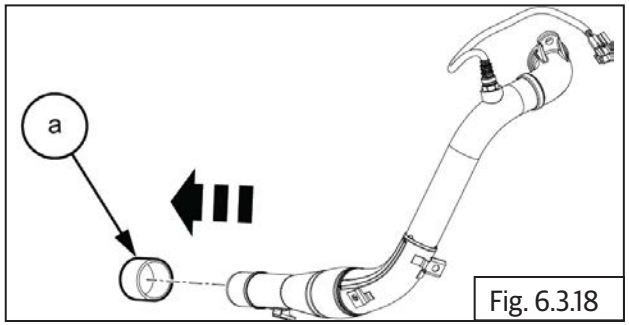

Fig. 6.3.18

	Screw driver

- Remove exhaust Copper Gasket **(a)** from cylinder head.

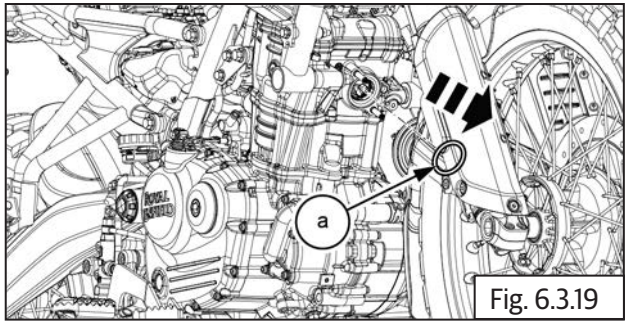

Fig. 6.3.19

	Screw driver and Mallet

6.3.5. O2/Oxygen Sensor (Front)

- Gently loosen and remove the Oxygen sensor **(a)** from the exhaust pipe.

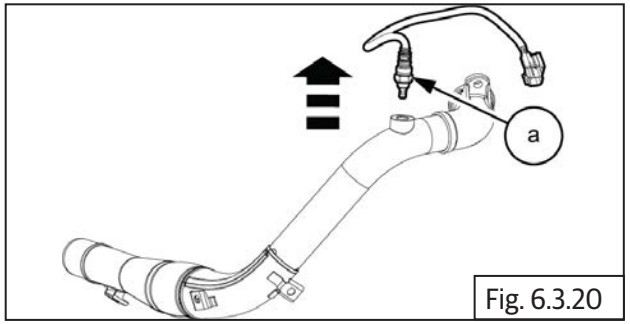

Fig. 6.3.20

	17 mm Double end spanner/Deep groove spanner

Assembly

6.3.6. O2/Oxygen Sensor (Front)

- Locate and tighten Oxygen sensor **(a)** on the exhaust pipe.

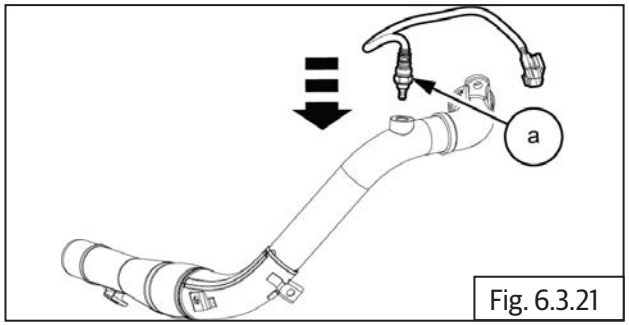

Fig. 6.3.21

	17 mm Double end spanner/Deep groove spanner
Torque	17 N-m/1.7 kgf-m

⚠ CAUTION
DO NOT over tighten as it damage the sensor.

6.3.7. Exhaust Pipe

- Locate exhaust Copper Gasket **(a)** into cylinder head.

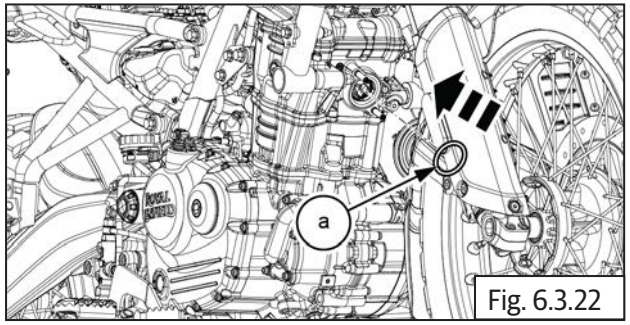

Fig. 6.3.22

- Locate the new gasket **(a)** into exhaust pipe .

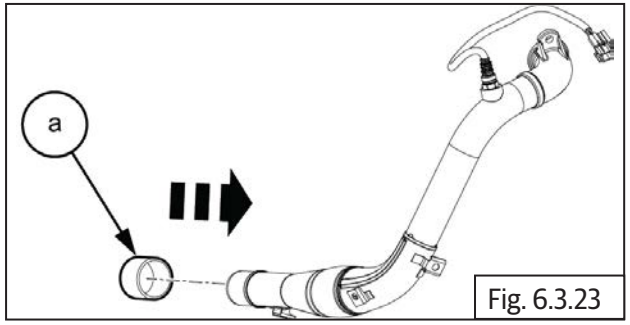

Fig. 6.3.23

- Locate exhaust pipe **(a)** into cylinder head and ensure the exhaust pipe flange is properly located on the studs.

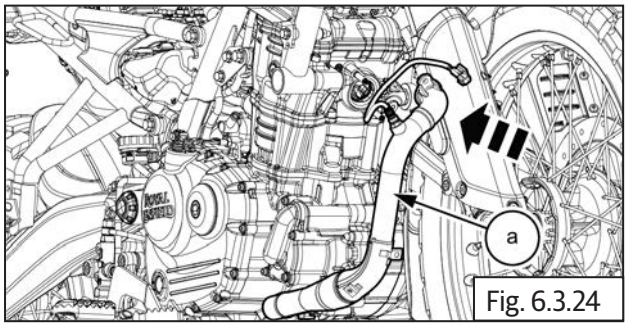

Fig. 6.3.24

- Assemble 2 Nos flange nuts **(M8) (a)** on the studs and hand tight it to align the rear end mounting.

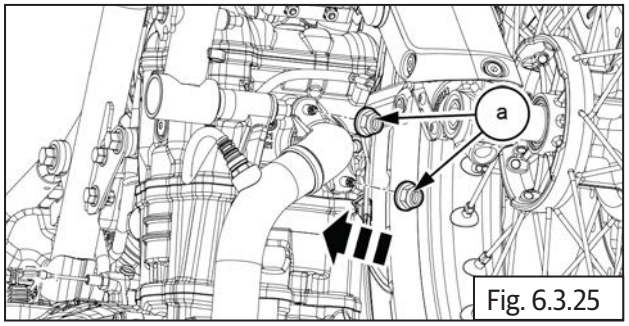

Fig. 6.3.25

	12 mm socket with ratchet
Torque	25 N-m/2.5 kgf-m

- Locate the guard **(a)** with bolts on the exhaust pipe ensure holes aligned.
- Ensure Clip nuts are placed in the bracket'

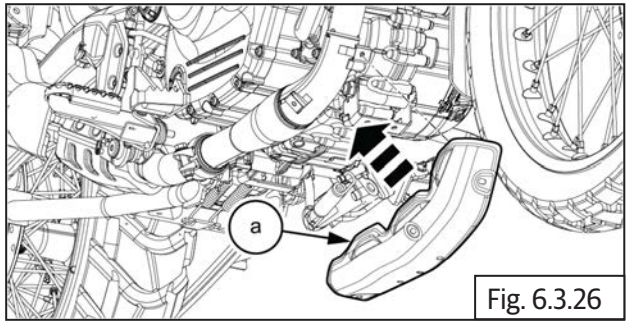

Fig. 6.3.26

- Tighten 3 Nos button head bolts **(M6) (a)** on exhaust pipe guard.

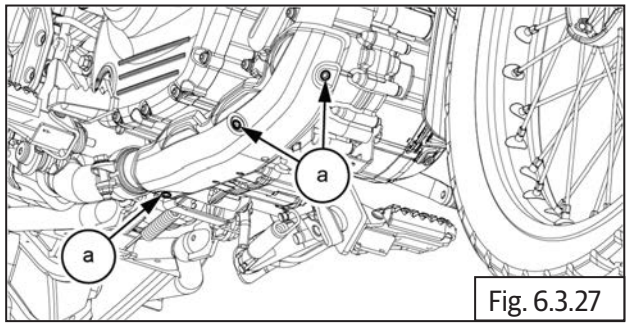

Fig. 6.3.27

	4mm Allen key
Torque	4 - 7 N-m/0.4 - 0.7 kgf-m

Assemble the following parts :

- Assemble the radiator.

6.3.8. Catbox

- Insert the catbox **(a)** into header pipe.

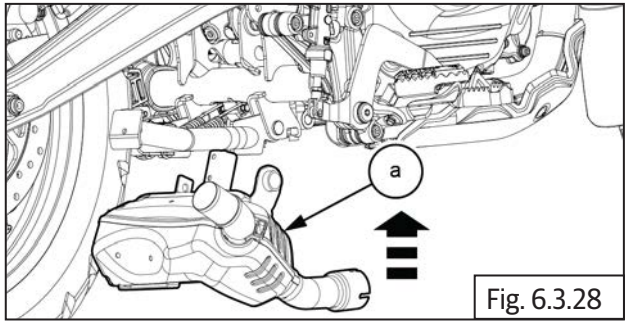

Fig. 6.3.28

- Locate and tighten catbox mounting bolt **(M8) (a)** along with 2 Nos pins **(b)** and 2 Nos damper bushes **(c)** on LHS catbox.

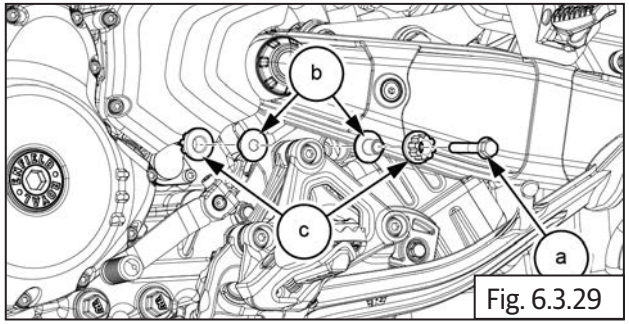

Fig. 6.3.29

	12 mm socket with ratchet
Torque	25 N-m/2.5 kgf-m

- Locate and tighten catbox mounting bolt **(M8) (a)** along with 2 Nos pins **(b)** and 2 Nos damper bushes **(c)** on RHS catbox.

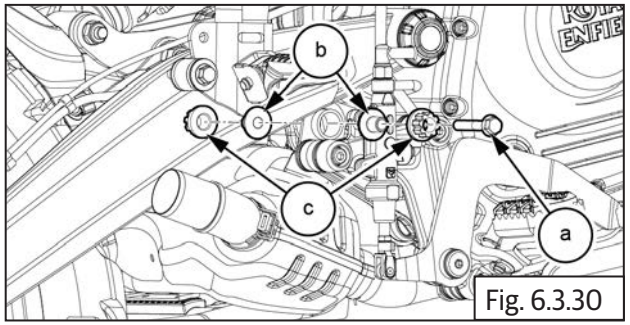

Fig. 6.3.30

	12 mm socket with ratchet
Torque	25 N-m/2.5 kgf-m

- The entry face of the catbox mouth and Exhaust pipe adaptor flange face should be as close as possible, **Max. 3mm gap** allowed.

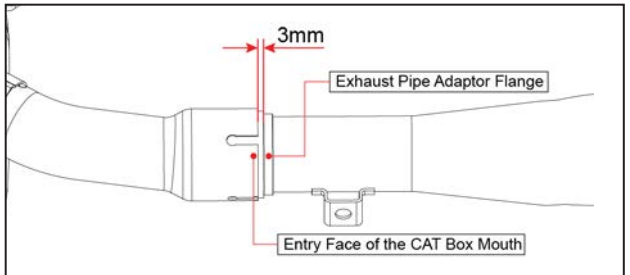

Fig. 6.3.31

- Position the clamp orientation refer below image.

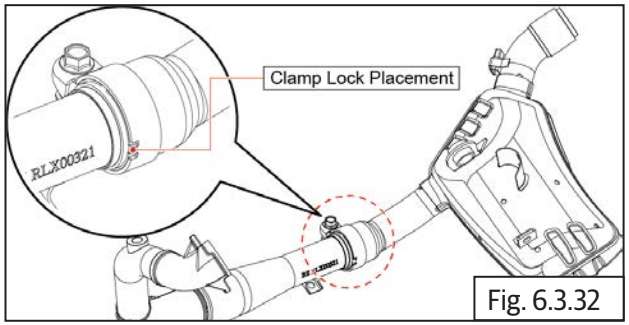

Fig. 6.3.32

- Tighten hex flange bolt **(M8) (a)** on mounting clamp.

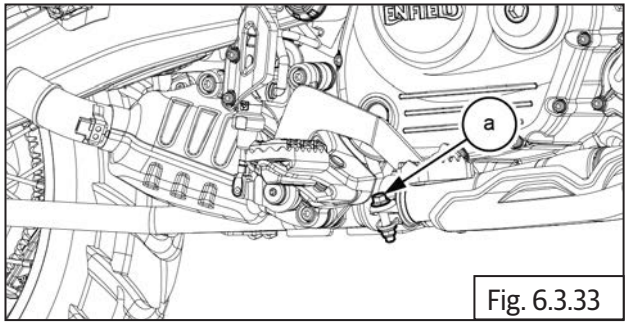

Fig. 6.3.33

	12 mm socket with ratchet
Torque	32 N-m/3.2 kgf-m

Assemble the following parts :

- Assemble the RHS heel guard.
- Assemble the LHS heel guard.

6.3.9. Silencer

- Install the new gasket **(a)** into the silencer.

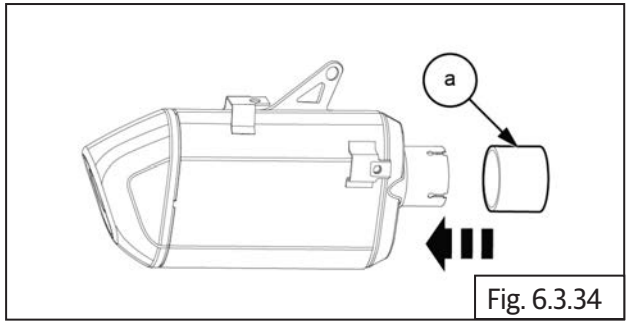

Fig. 6.3.34

- Locate the silencer **(a)** into catbox out let pipe.

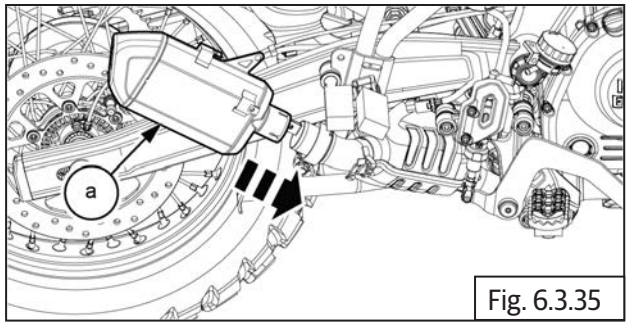

Fig. 6.3.35

- Locate and tighten silencer mounting bolt with nut **(M8) (a)** along with 2 Nos pins **(b)** and 2 Nos damper **(c)** on silencer.

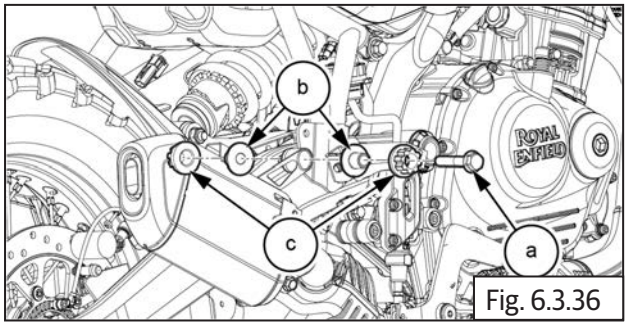

Fig. 6.3.36

	12 mm socket with ratchet
Torque	25 N-m/2.5 kgf-m

- Position the clamp orientation refer below image.

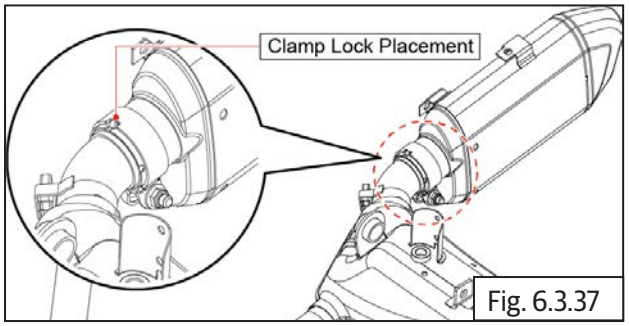

Fig. 6.3.37

- Tighten hex flange bolt **(M8) (a)** on mounting clamp.

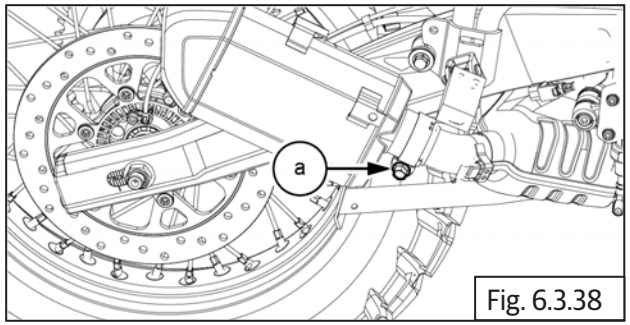

Fig. 6.3.38

	12 mm socket with ratchet
Torque	32 N-m/3.2 kgf-m

- Install the guard stopper cap **(a)** into inner of the heat shield.

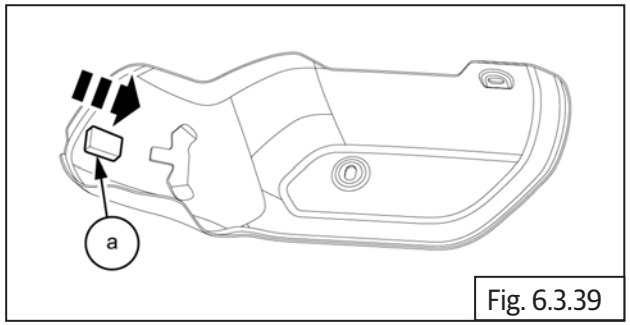

Fig. 6.3.39

- Locate the rear heat shield **(a)** on the silencer.
- Ensure the Clip nut is placed on the mountings.

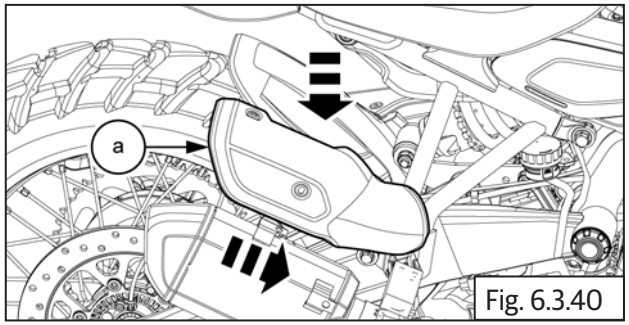

Fig. 6.3.40

- Locate and tighten the 2 Nos button head bolts **(M6) (a)** on rear silencer heat shield.

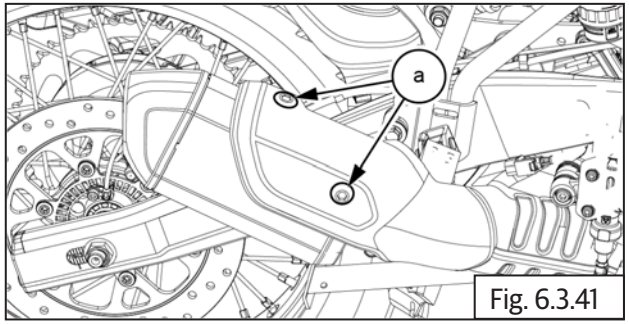

Fig. 6.3.41

	4mm Allen key
Torque	4 - 7 N-m/ 0.4 - 0.7 kgf-m

6.3.10. O2 Sensor / Oxygen Sensor Connectors (Front)

- Connect oxygen sensor connector **(a)**

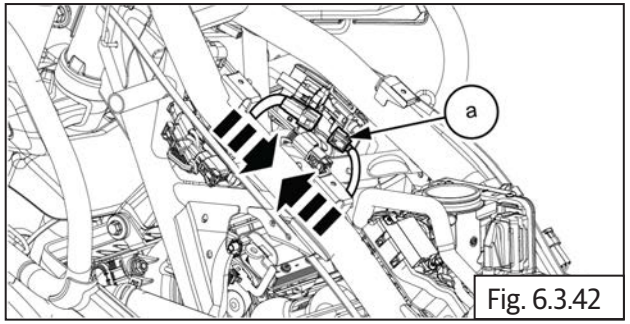

Fig. 6.3.42

- Fix the 1 No omega clips **(a)** on Oxygen Sensor wiring harness.

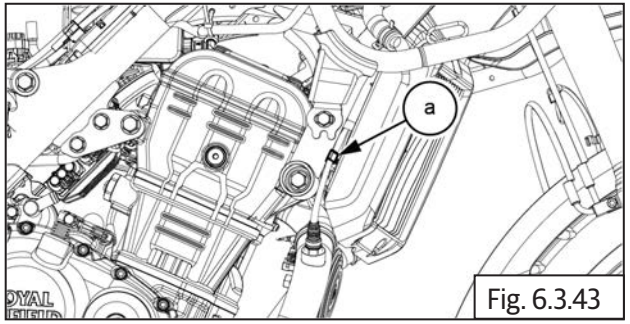

Fig. 6.3.43

Assemble the following parts :

- Assemble the LHS and RHS side panels.
- Assemble the air filter box.
- Assemble the fuel tank.

6.3.11 Troubleshooting

Symptom	Possible Cause	Diagnosis	How to Fix	Recommended Specification
Vibration/rattling noise from exhaust pipe and cat box.	Exhaust pipe mounting to cylinder head bolt loose.	Exhaust pipe flange mounting to cylinder head is loose/flange is cracked.	Check and tighten flange mounting to torque. Replace exhaust pipe if flange is cracked.	Torque: 25 N-m/2.5 kgf-m
	Exhaust pipe with cat box mounting to frame is loose.	Fasteners are loose/mounting clamps are cracked.	Check and tighten fasteners to torque. Replace clamps if they are cracked. Replace Exhaust pipe with CAT box.	Torque: 32 N-m/3.2 kgf-m
Vibration/rattling noise from silencer.	Silencer mounting to frame is loose.	Fasteners are loose/mounting clamps are cracked.	Check and tighten fasteners to torque Replace clamps/silencer if they are cracked.	Torque: 25 N-m/2.5 kgf-m
	Internal baffles in silencer are broken.	Remove silencer and shake to check if internal baffles are cracked.	Replace silencer assembly.	
Exhaust gas leak from cylinder head joint/silencer joint.	Gaskets are burnt/missing.	Gaskets are burnt-out due to loose clamping of exhaust pipe/ silencer.	Replace exhaust pipe/silencer gaskets.	

NOTE

- *The troubleshooting given in this section is only related to issues with noise/leak in the exhaust system. For complaints related to poor pickup, misfiring, etc., please refer to engine section.*

FOOTREST/CONTROL BRACKET/STAND

CONTENTS **PAGE**

6.4 Foortrest / Control Bracket/Stand 272

Dismantling..... 272

6.4.1. Rider Footrest..... 272

6.4.2. Pillion Footrest..... 273

6.4.3. Gear Pedal..... 273

6.4.4. Control Plate (LHS)..... 274

6.4.5. Control Plate (RHS)..... 274

6.4.6. Side Stand..... 275

6.4.7. Center Stand..... 277

Inspection..... 278

Assembly..... 278

6.4.8. Center Stand..... 278

6.4.9. Side Stand..... 279

6.4.10. Control Plate (RHS)..... 280

6.4.11. Control Plate (LHS)..... 281

6.4.12. Gear Pedal..... 282

6.4.13. Pillion Footrest..... 282

6.4.14. Rider Footrest..... 283

6.4. Footrests/ Contol bracket/ Stands

Dismantling

⚠ CAUTION
Ensure the motorcycle is upright on a firm and flat surface.

6.4.1. Rider Footrest

- Locate a scissor jack under the cradle frame and lift motorcycle such that the front wheel is off the ground by minimum 6 inches (or 15 cm).

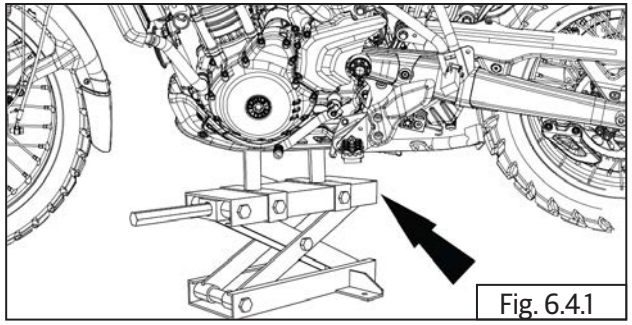

Fig. 6.4.1

- Remove the circlip **(a)** at the bottom of the LH footrest.

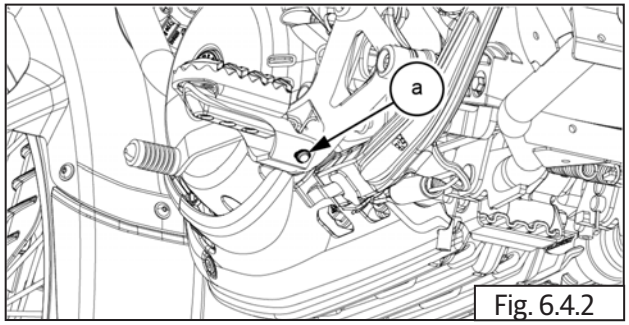

Fig. 6.4.2

	Circlip Expander

- Push the pin **(a)** on the upward direction to remove the footrest **(c)** along with spring **(b)**.

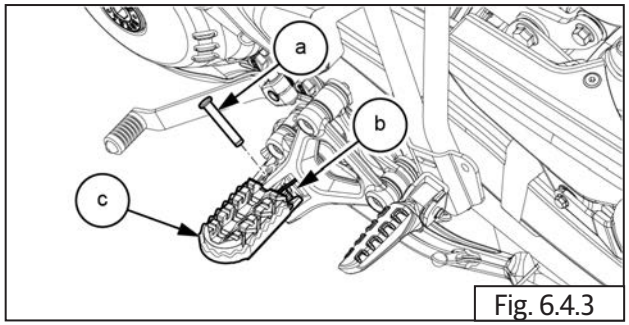

Fig. 6.4.3

- Loosen 2 Nos. cap bolt **(M5) (a)** and remove rubber **(c)** from rider footrest **(b)**.

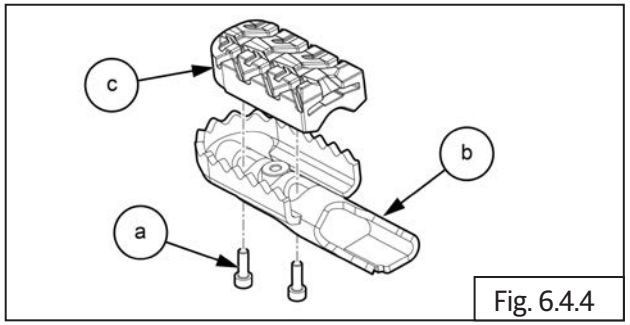

Fig. 6.4.4

	4 mm Allen Key With Ratchet

- Loosen 1 Nos. cap bolt **(M5) (a)** and foot peg **(b)** from rider footrest **(c)**.

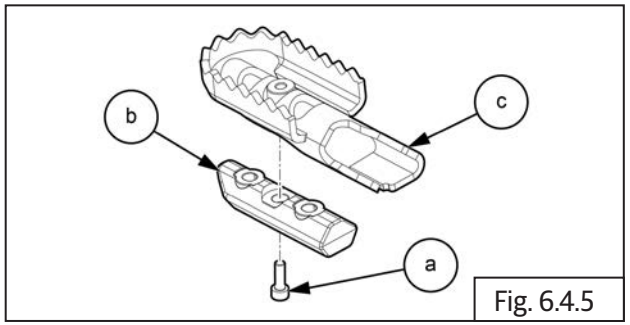

Fig. 6.4.5

	5 mm Allen Key With Ratchet

- Repeat the same rider footrest removal procedure to RHS footrest **(a)**.

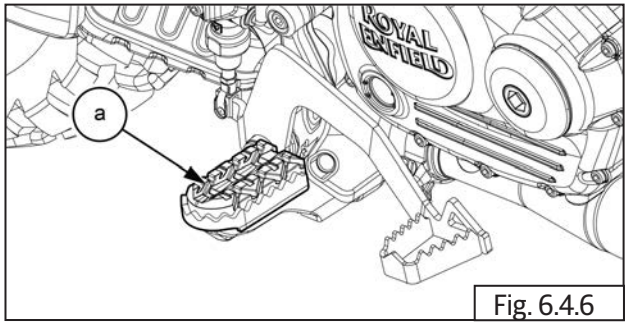

Fig. 6.4.6

6.4.2. Pillion Footrest

- Remove circlip (a) from the bottom of the LH footrest.

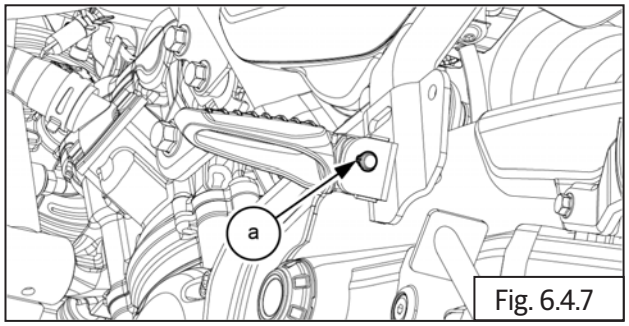

Fig. 6.4.7

- Gently pull out pin **(a)** from the top supporting the LH footrest.

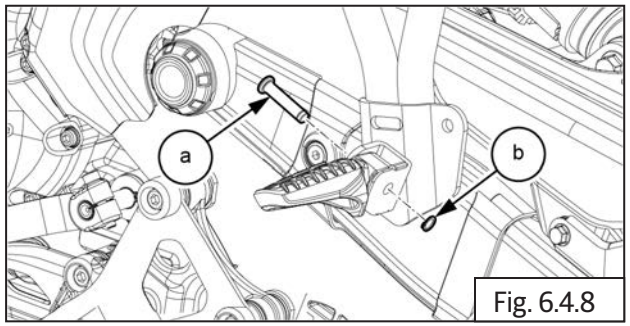

Fig. 6.4.8

	Screw driver

- Remove LH footrest **(a)** from mounting bracket carefully along with ball **(b)** and spring **(c)**.

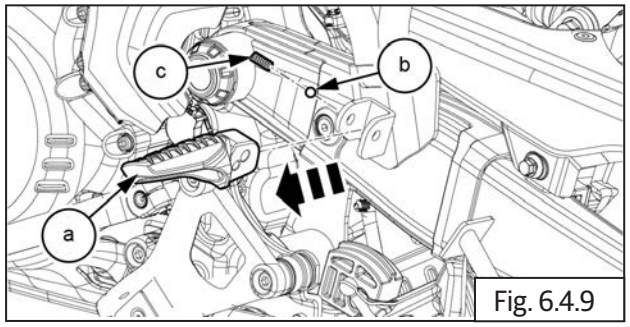

Fig. 6.4.9

- Repeat the same pillion footrest removal procedure to RHS footrest **(a)**.

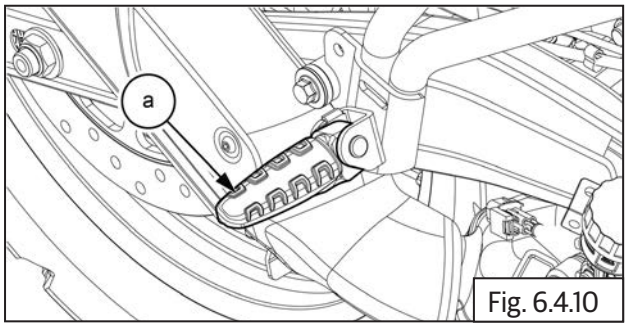

Fig. 6.4.10

6.4.3. Gear Pedal

- Loosen and remove 1 Nos cap bolt **(M6) (a)** from gear pedal.

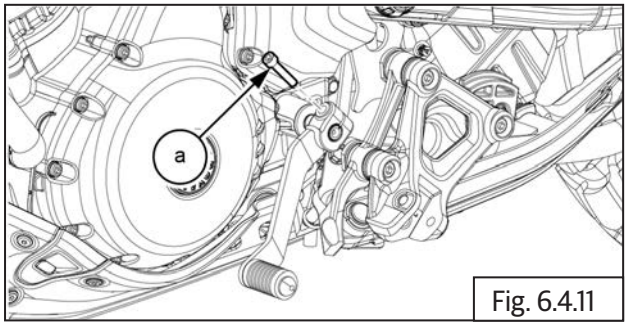

Fig. 6.4.11

	5 mm Allen Key With Ratchet

- Gently pull out gear pedal **(a)** from shifter.

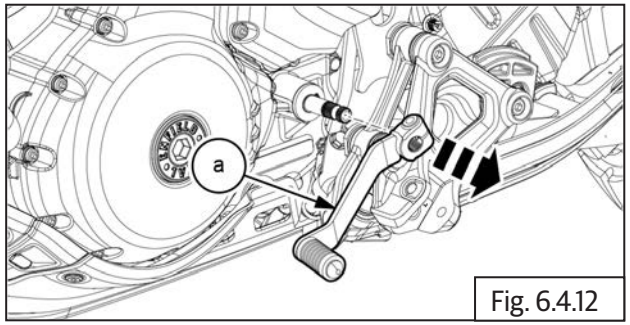

Fig. 6.4.12

6.4.4. Control Plate (LHS)

- Loosen and remove 3 Nos. cap bolts **(M8) (a)** from control plate.

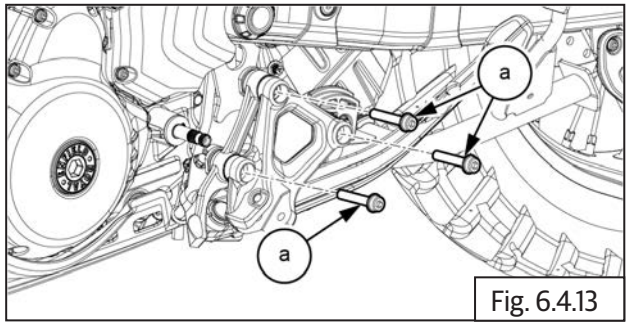

Fig. 6.4.13

	6 mm Allen Key With Ratchet

- Remove 3 sets of top hat **(a)**, rubber bush **(b)** & top hat threaded **(c)** from control plate.

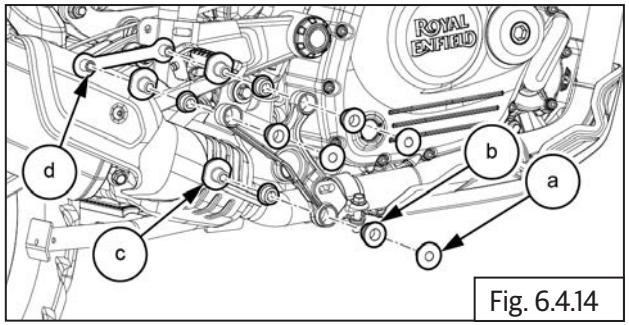

Fig. 6.4.14

- Remove control plate **(a)** from frame.

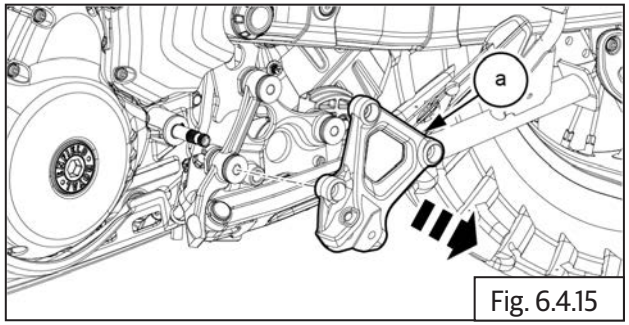

Fig. 6.4.15

- Loosen and remove 1 Nos. hex flange bolt **(M6) (a)** bolt & hex nut from the frame.

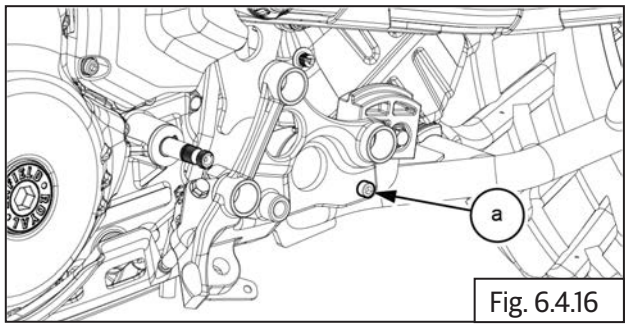

Fig. 6.4.16

	10 mm Socket With Ratchet 10 mm Double End Spanner

- Remove the rubbing block chain **(a)** from the frame.

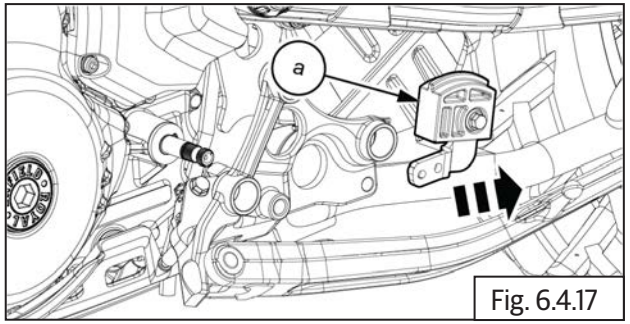

Fig. 6.4.17

- Loosen and remove 1 Nos. hex flange bolt **(M6) (a)** Top HAT **(b)** and Hex nut **(c)** from rubbing block chain.

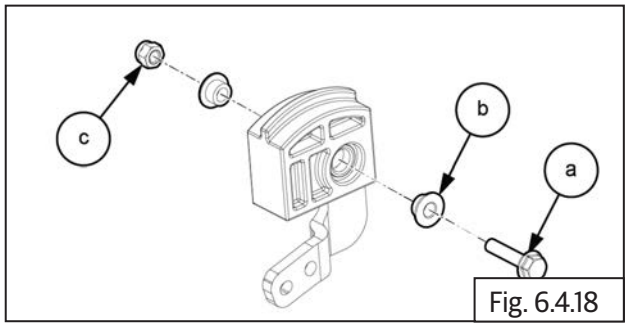

Fig. 6.4.18

	10 mm Socket With Ratchet 10 mm Double End Spanner

- Remove the rubbing block chain **(a)** from the Chain rubbing bracket.

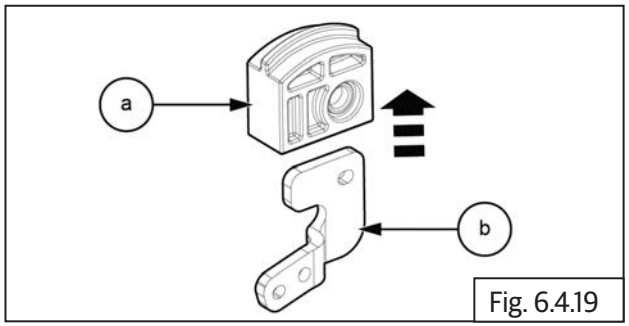

Fig. 6.4.19

6.4.5. Control Plate (RHS)

- Loosen 2 Nos. cap bolts **(M6) (a)** and remove heel guard **(b)** from control plate RHS.

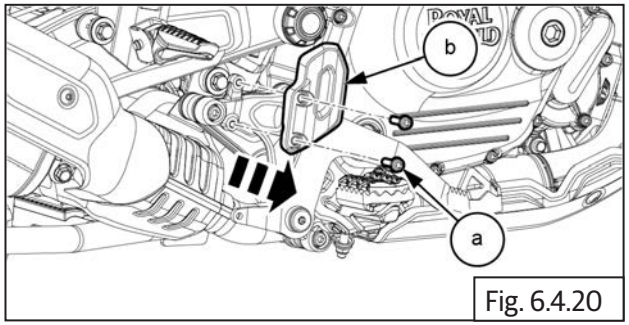

Fig. 6.4.20

	5 mm Allen Key With Ratchet

- Loosen and remove 3 Nos. cap bolts **(M8) (a)** from control plate RHS.

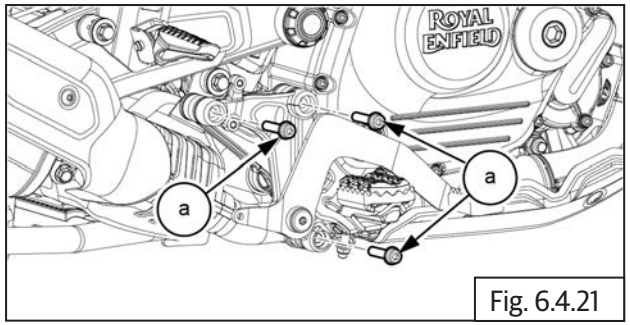

Fig. 6.4.21

	6 mm Allen Key With Ratchet

- Remove 3 sets of top hats **(a)**, rubber bushes **(b)**, top hat threaded **(c) (d)** & nut plate **(e)** from control plate RHS.

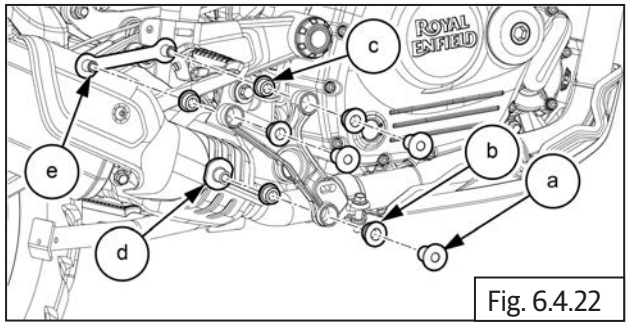

Fig. 6.4.22

- Remove control plate RHS **(a)** from frame.

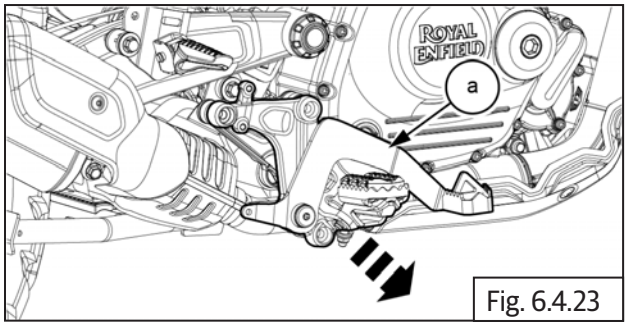

Fig. 6.4.23

- Loosen and remove 1 No. screw **(a)** & hex flange nut **(M8) (b)** from control plate RHS.

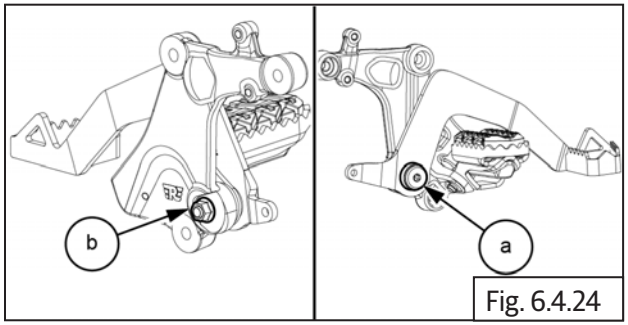

Fig. 6.4.24

	6 mm Allen Key With Ratchet 13 mm Double End Spanner

- Remove brake pedal **(a)** along with bush **(c)** and spring **(b)** from RH control plate.

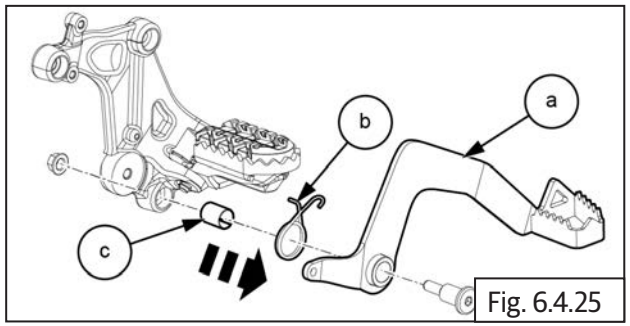

Fig. 6.4.25

6.4.6. Side Stand

⚠ CAUTION

Ensure the motorcycle is upright on a firm and flat surface.

⚠ CAUTION

Be extremely careful when removing and installing the springs as the combined tension of the springs is very strong.
Keep the motorcycle on its side stand when removal and installing the center stand.
The spring removal and installation shall be performed by two people. While one person holds the motorcycle, another person installs the spring.

- Locate a scissor jack under the cradle frame and lift motorcycle such that the front wheel is off the ground by minimum 6 inches (or 15 cm).

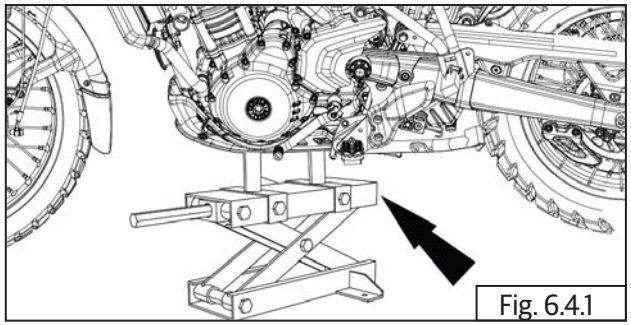
Fig. 6.4.1

- Disconnect the side stand switch coupler **(a)**.

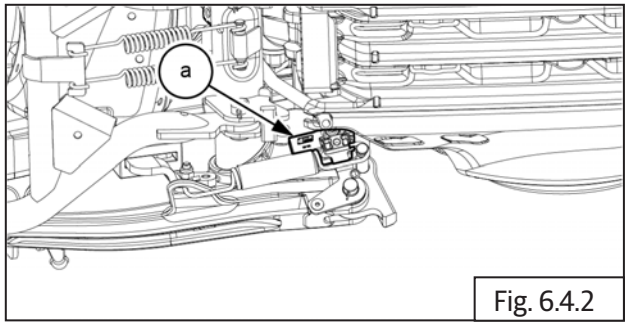

Fig. 6.4.2

- Remove spring (a) from the side stand.

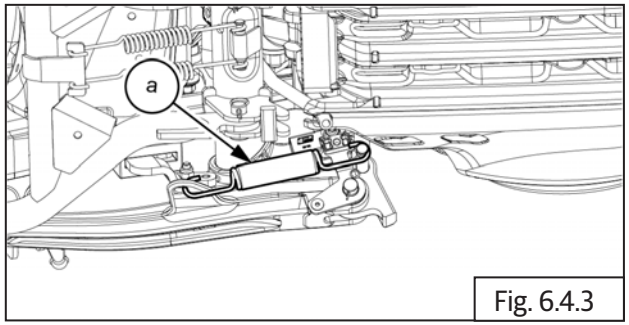

Fig. 6.4.3

	Screw driver

- Remove split pin **(a)** from clevis pin.

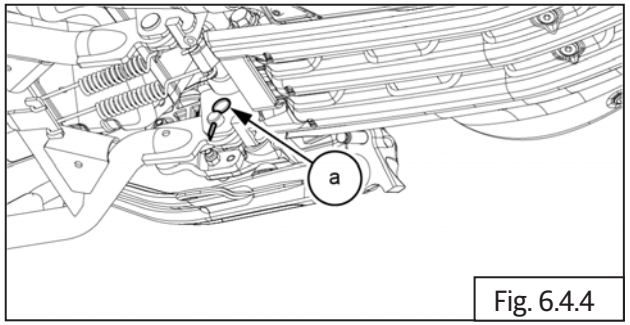

Fig. 6.4.4

	Nose plier

- Remove clevis pin **(a)** from side stand.

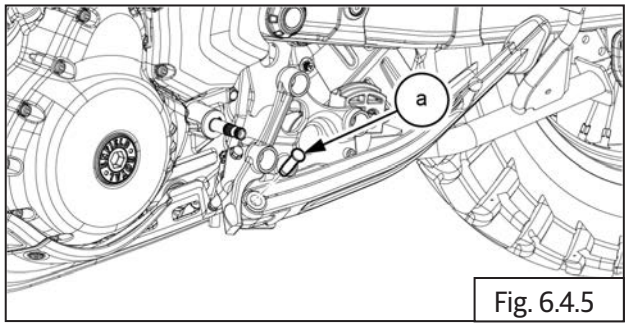

Fig. 6.4.5

- Remove side stand **(a)** from frame.

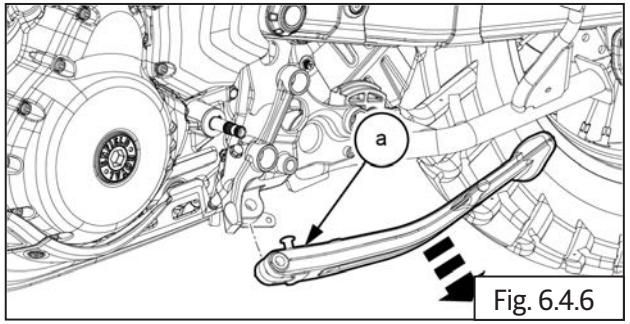

Fig. 6.4.6

- Loosen and remove 1 Nos. hex flange bolt **(M8) (a)** & hex nut **(b)** from spring pin.

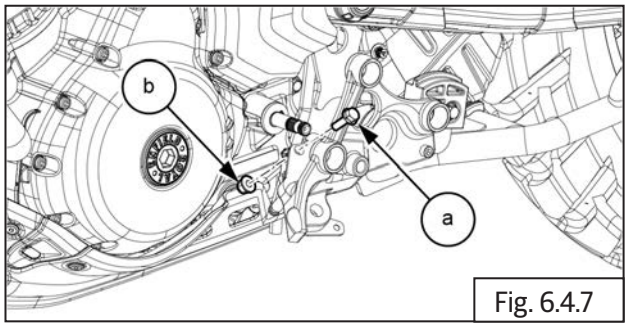

Fig. 6.4.7

	8 mm Socket With Ratchet 10 mm Double End Spanner

- Remove the side stand switch **(a)** from frame .

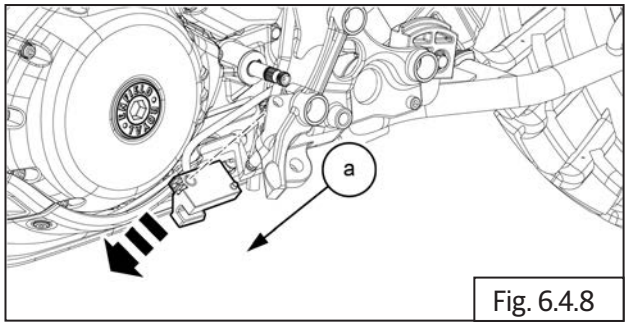

Fig. 6.4.8

6.4.7. Center Stand

⚠ CAUTION

Ensure the motorcycle is upright on a firm and flat surface.

⚠ CAUTION

Be extremely careful when removing and installing the springs as the combined tension of the springs is very strong.
Keep the motorcycle on its side stand when removal and installing the center stand.
The spring removal and installation shall be performed by two people. While one person holds the motorcycle, another person installs the spring.

- Locate a scissor jack under the cradle frame and lift motorcycle such that the front wheel is off the ground by minimum 6 inches (or 15 cm).

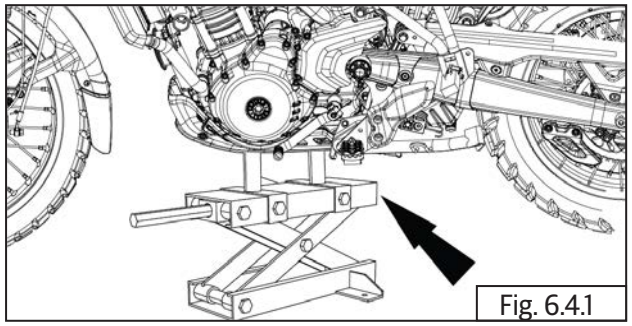
Fig. 6.4.1

- Remove 2 Nos. springs **(a)** from the center stand.

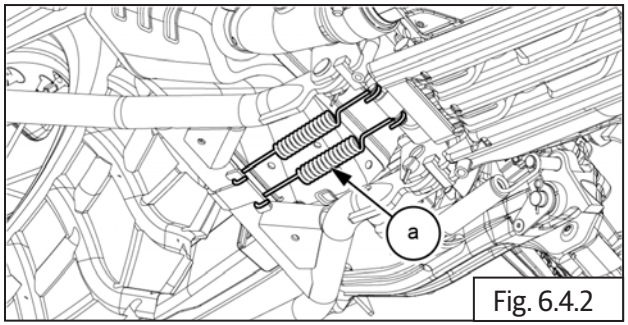

Fig. 6.4.2

	Screw driver

- Straighten and remove split pin **(a)** from spindle pin located on center stand.

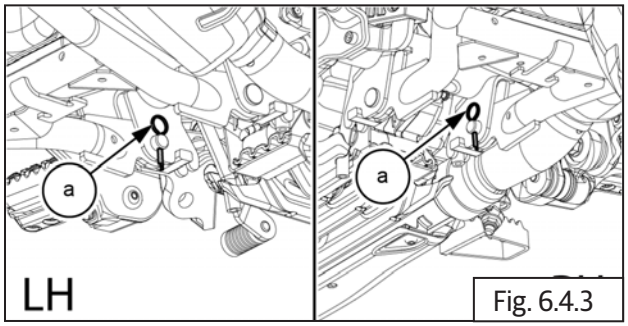

Fig. 6.4.3

	Nose plier

- Remove spindle pin **(a)** from both side to separate center stand from frame.

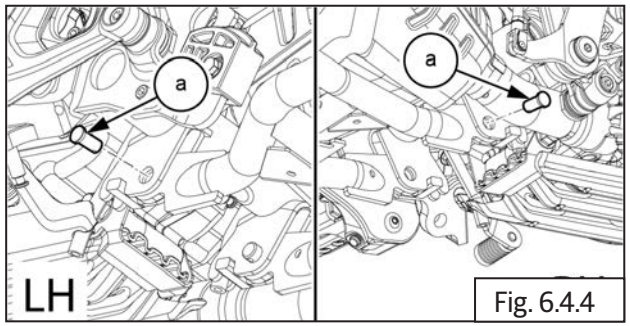

Fig. 6.4.4

- Remove center stand **(a)** from frame.

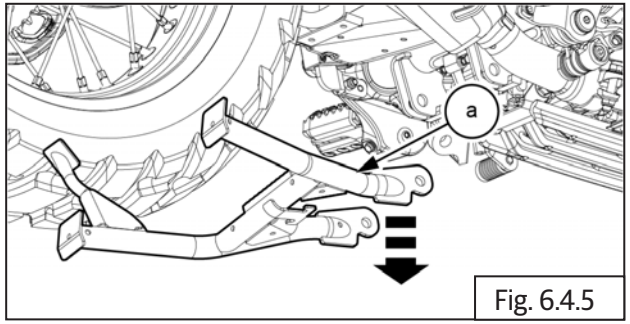

Fig. 6.4.5

- Remove rubber stopper **(a)** from center stand.

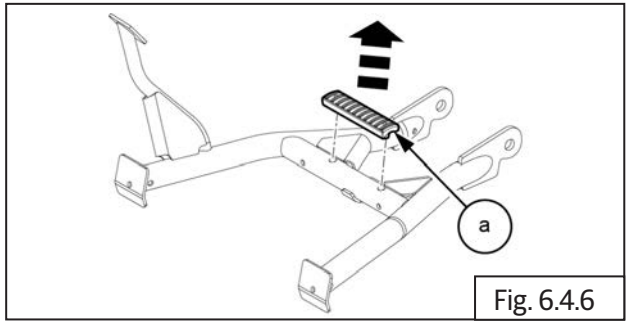

Fig. 6.4.6

Inspection

- Inspect footrests for any wear out, cracks, damages at the mounting area.
- Inspect clevis pin for any wear-out.
- Inspect springs for loss of tension and breakage.
- Inspect ball (only for pillion footrest) for uneven wear.
- Inspect rider footrest housing on frame for any cracks and damages.
- Inspect pillion footrest brackets for any cracks and damages.
- Inspect the center stand for rust formation, any bend or damage.
- Inspect side stand for any wear out, cracks, damages at the mounting area.
- Inspect rubber bush for any cracks, cut or tear and wear.

Assembly

6.4.8 Side Stand

⚠ CAUTION

Ensure the motorcycle is upright on a firm and flat surface.

⚠ CAUTION

Be extremely careful when removing and Installing the springs as the combined tension of the springs is very strong.
Keep the motorcycle on its side stand when removal and installing the center stand.
The spring removal and installation shall be Performed by two people. While one person holds the motorcycle, another person installs the spring.

- Remove rubber stopper **(a)** from center stand.

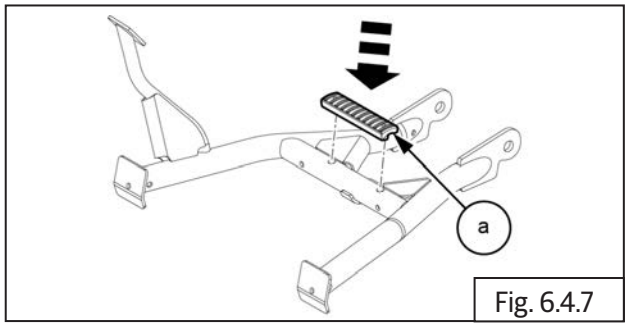

Fig. 6.4.7

- Remove center stand **(a)** from frame.

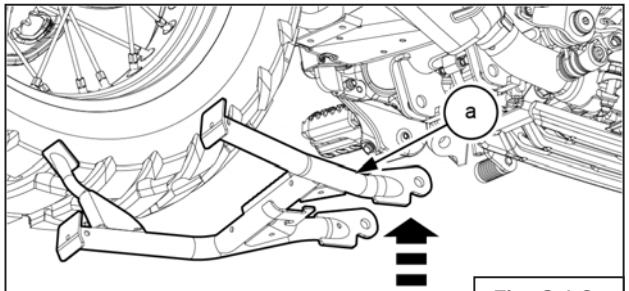

Fig. 6.4.8

- Remove spindle pin **(a)** from both side to separate center stand from frame.

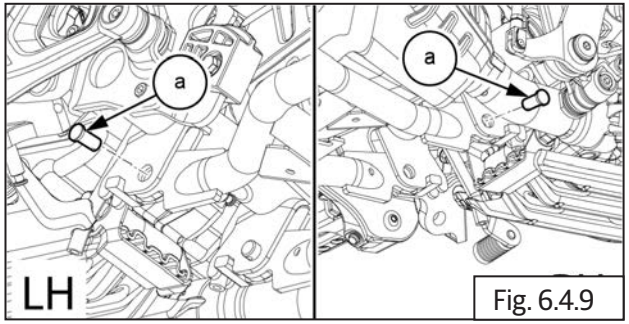

Fig. 6.4.9

- Straighten and remove split pin **(a)** from spindle pin located on center stand.

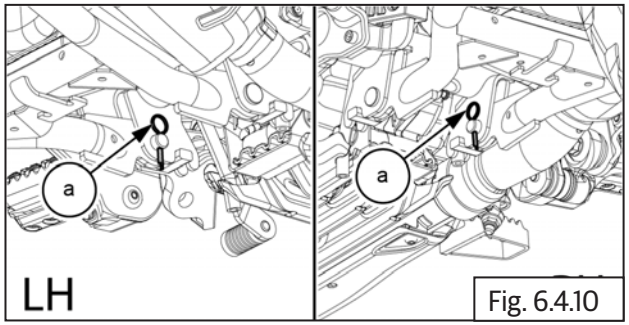

Fig. 6.4.10

	Nose plier

NOTE
• *Spindle pin must be orientated as per below image.*

- Remove 2 Nos. springs **(a)** from the center stand.

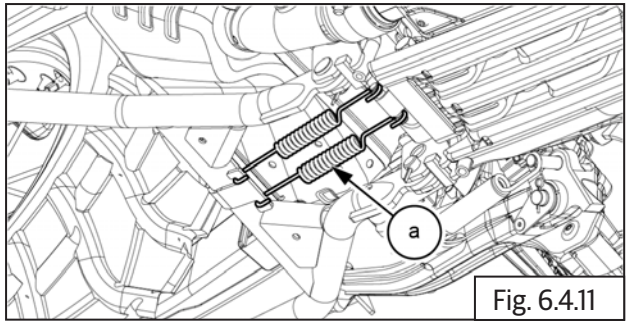

Fig. 6.4.11

	Screw driver

6.4.9. Side Stand

⚠ CAUTION
Ensure the motorcycle is upright on a firm and flat surface.

⚠ CAUTION
Be extremely careful when removing and installing the springs as the combined tension of the springs is very strong. **Keep the motorcycle on its side stand when removal and installing the center stand.** **The spring removal and installation shall be performed by two people. While one person holds the motorcycle, another person installs the spring.**

- Locate the side stand switch **(a)** into frame .

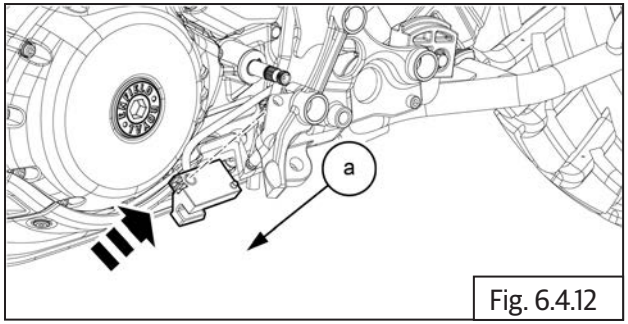

Fig. 6.4.12

- Locate and tighten 1 Nos. hex flange bolt **(M6) (a)** & hex nut **(b)** into side stand switch plate.

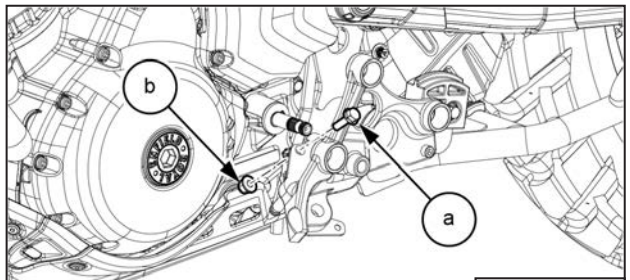

Fig. 6.4.13

	6 mm Allen Socket with Ratchet
Torque	10 Nm / 1.0 kgf-m

- Apply grease on the inner surface of the stand.
- Locate side stand **(a)** into the frame.

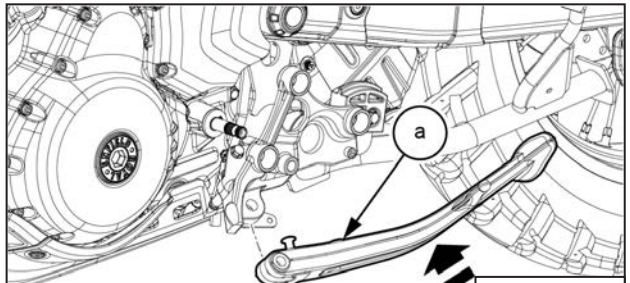

Fig. 6.4.14

- Locate clevis pin **(a)** into side stand.

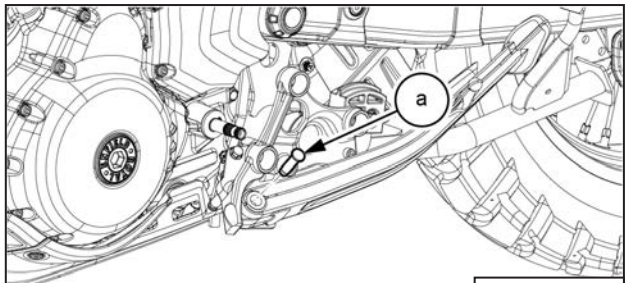

Fig. 6.4.15

- Insert split pin **(a)** into the clevis pin.

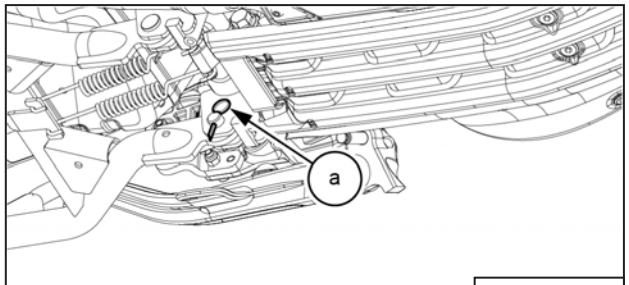

Fig. 6.4.16

	Nose plier

- Install spring **(a)** into the side stand.

NOTE
• *Spring must be orientated as per below image.*

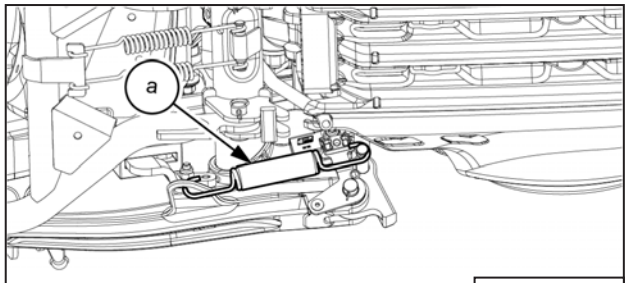

Fig. 6.4.17

	Screw driver

- Connect the side stand switch coupler **(a)**.

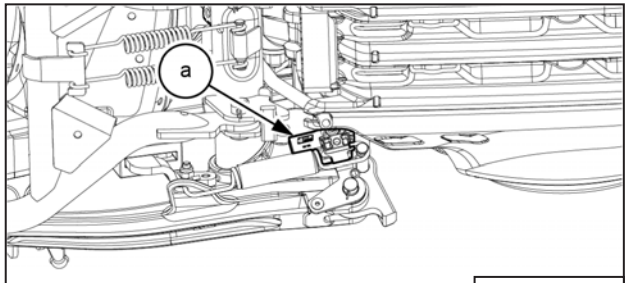

Fig. 6.4.18

6.4.10. Control Plate (RHS)

- Locate brake pedal **(a)** along with bush **(c)** and spring **(b)** into RH control plate.

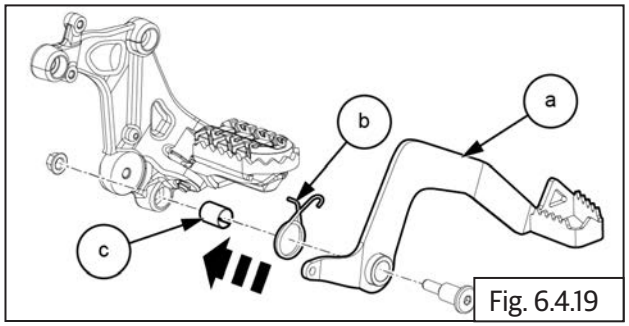

Fig. 6.4.19

- Locate and tighten 1 No. screw **(a)** into control plate RHS.
- Locate and tighten 1 No. hex flange nut **(M8) (b)** into control plate RHS.

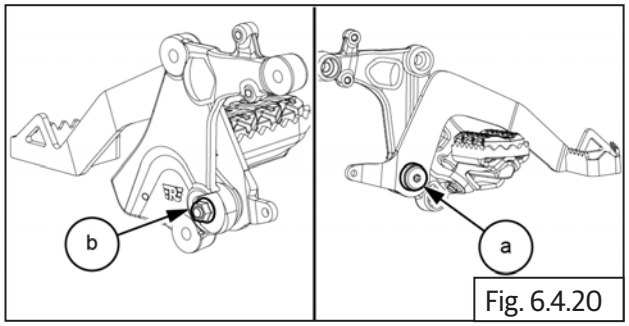

Fig. 6.4.20

	6 mm Allen Socket with Ratchet 13 mm Double end Spanner
Torque	25 Nm / 2.5 kgf-m

- Install control plate RHS **(a)** into the frame.

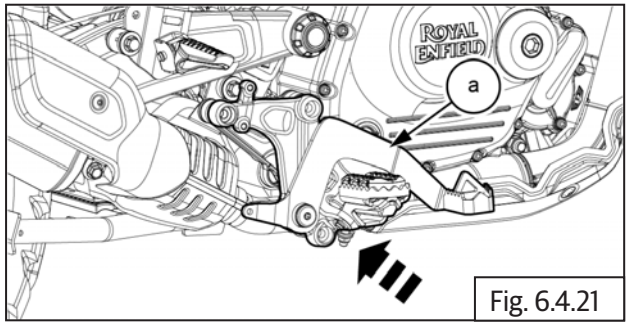

Fig. 6.4.21

- Install 3 sets of top hat **(a)**, rubber bush **(b)**, top hat threaded **(c)** & nut plate **(d)** into control plate RHS.

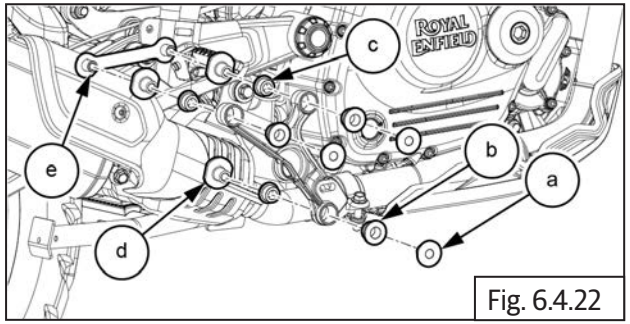

Fig. 6.4.22

- Locate and tighten 3 Nos. cap bolts **(M8) (a)** into control plate RHS.

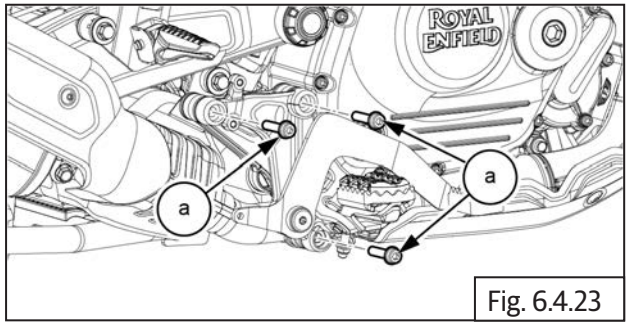

Fig. 6.4.23

- Locate the heel guard **(b)** & tighten 2 Nos. cap bolts **(M6) (a)** into control plate RHS.

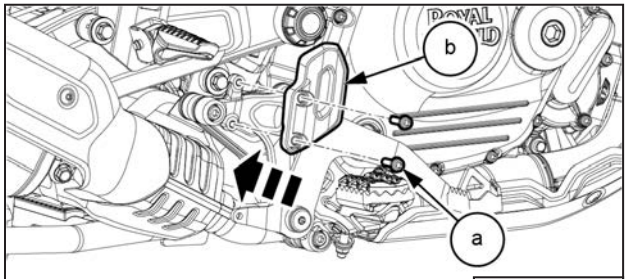

Fig. 6.4.24

	5 mm Allen Key with Ratchet
Torque	10 Nm / 1.0 kgf-m

6.4.11. Control Plate (LHS)

- Locate rubbing block chain **(a)** into Chain rubbing bracket.

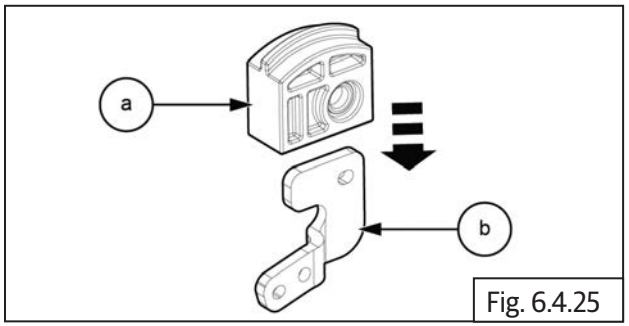

Fig. 6.4.25

- Locate and tighten 1 Nos. hex flange bolt **(M6) (a)** Top HAT **(b)** and Hex nut **(c)** into rubbing block chain.

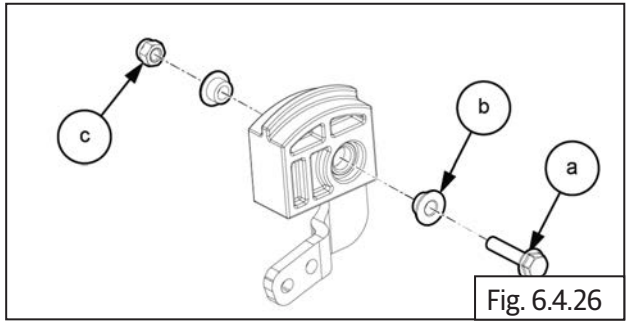

Fig. 6.4.26

	10 mm Allen Socket with Ratchet 10 mm Double end Spanner
Torque	10 Nm / 1.0 kgf-m

- Locate rubbing block chain **(a)** into frame.

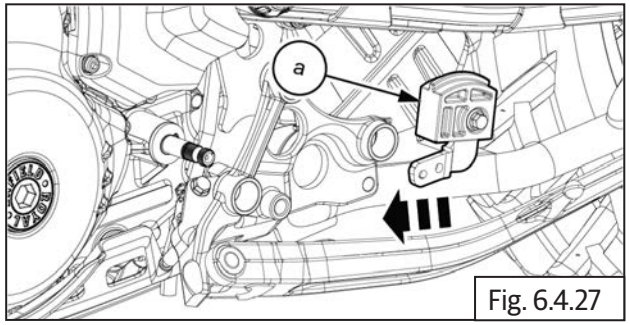

Fig. 6.4.27

- Locate and tighten 1 Nos. hex flange bolt **(M6) (a)** bolt & hex nut into frame.

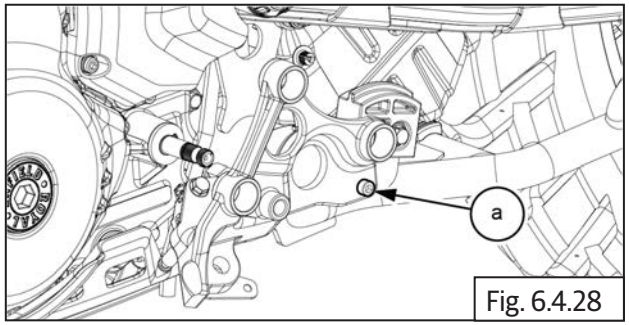

Fig. 6.4.28

	10 mm Allen Socket with Ratchet 10 mm Double end Spanner
Torque	10 Nm / 1.0 kgf-m

- Locate control plate LHS **(a)** into frame.

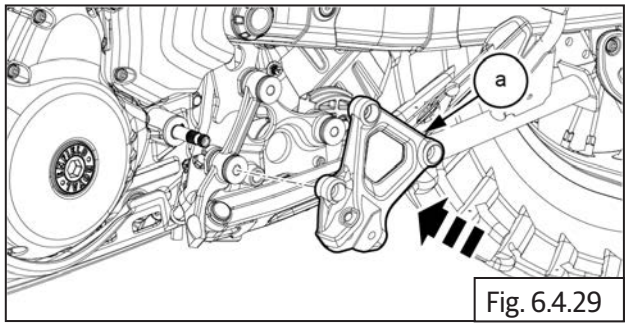

Fig. 6.4.29

- Install 3 sets of top hats **(a)**, rubber bushes **(b)**, top hat threaded **(c) (d)** & nut plate **(e)** on control plate RHS..

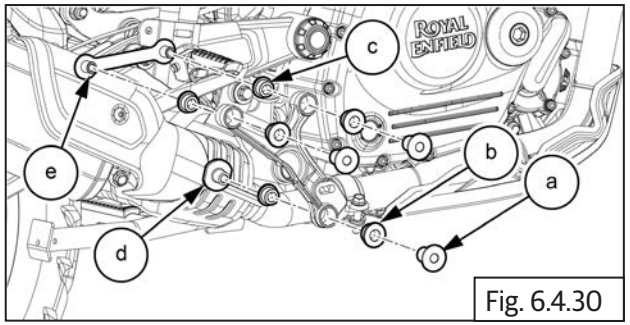

Fig. 6.4.30

- Locate and tighten 3 Nos. cap bolts **(M8) (a)** into control plate LHS.

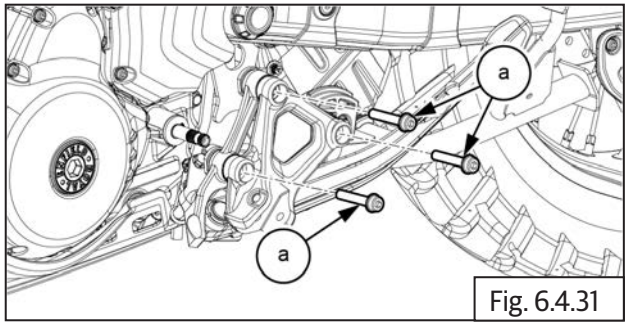

Fig. 6.4.31

	6 mm Allen Key with Ratchet
Torque	20 Nm / 2.0 kgf-m

6.4.12. Gear Pedal

- Gently install the gear pedal **(a)** into shifter.

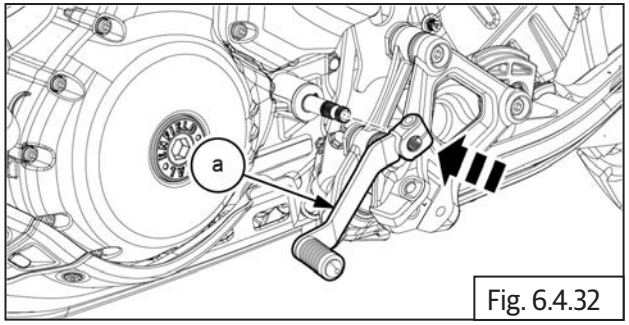

Fig. 6.4.32

- Locate and tighten 1 No cap bolt **(M6) (a)** on gear pedal.

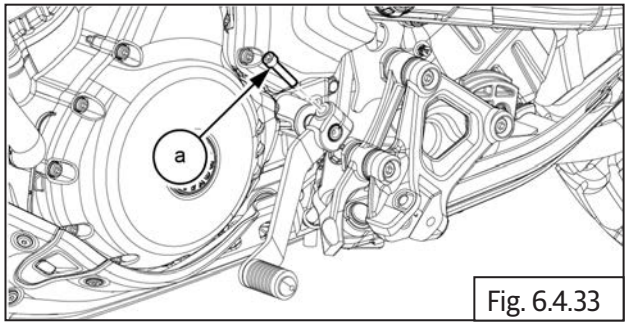

Fig. 6.4.33

	5 mm Allen Key with Ratchet
Torque	15 Nm / 1.0 kgf-m

6.4.13. Pillion Footrest

- Install spring **(c)** in the grove provided **(a)**.
- Apply grease on the ball **(b)** slightly and locate it on the hole **(a)** in the footrest.
- Locate the footrest **(a)** carefully on the mounting bracket without disturbing the ball **(b)**.

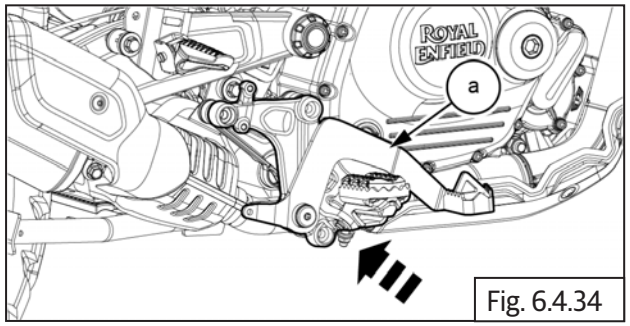

Fig. 6.4.34

- Gently install the pin **(a)** on top supporting the LH footrest.

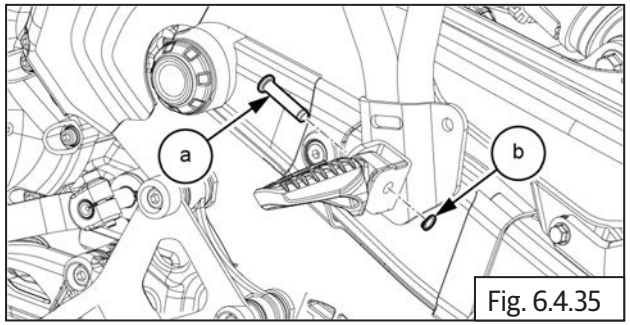

Fig. 6.4.35

	Screw driver

- Locate and fix circlip **(a)** on bottom of the LH footrest.

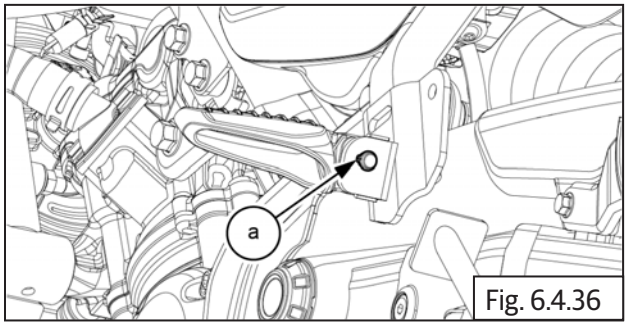

Fig. 6.4.36

- Repeat the same pillion footrest install procedure to RHS footrest (a).

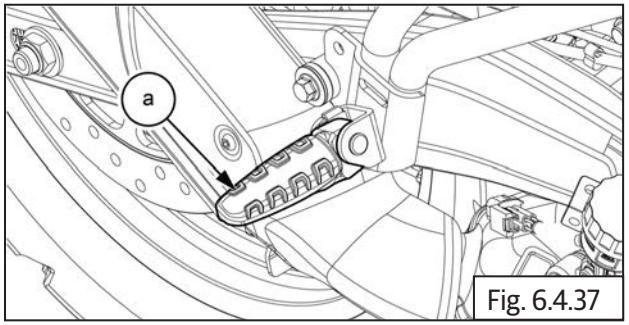

Fig. 6.4.37

	Circlip Expander

6.4.14. Rider Footrest LHS

- Locate and tighten 1 Nos. cap bolt **(M5) (a)** and foot peg **(b)** on rider footrest **(c)**.

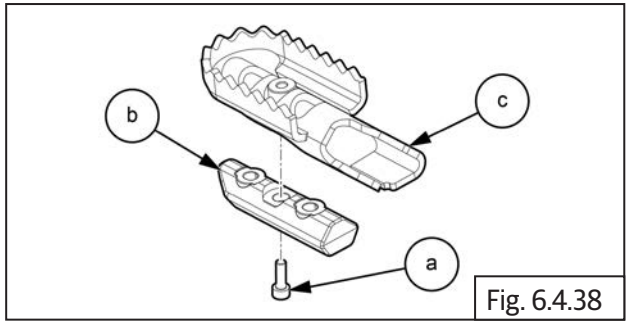

Fig. 6.4.38

	5 mm Allen Socket with Ratchet
Torque	10 Nm / 1.0 kgf-m

- Locate rubber **(c)** on rider footrest **(b)**
- Locate and tighten 2 Nos. cap bolts **(M5) (a)** on rider footrest **(b)**

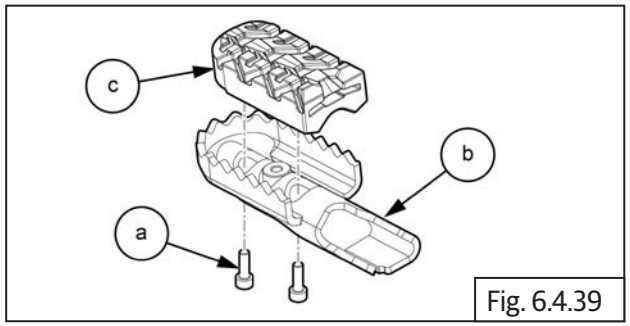

Fig. 6.4.39

	4 mm Allen Socket with Ratchet
Torque	10 Nm / 1.0 kgf-m

- Locate the spring **(b)** between the footrest **(c)**.
- Insert the pin **(a)** into the footrest **(c).**

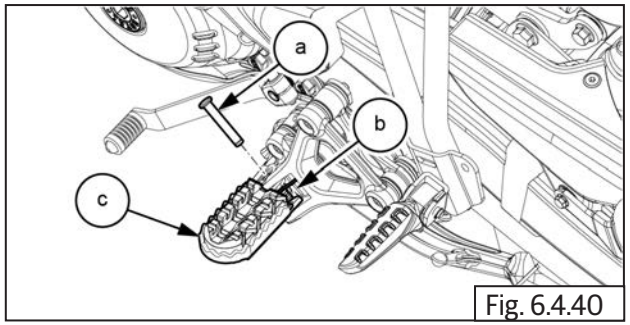

Fig. 6.4.40

- Install the circlip **(a)** at the bottom of the LH footrest.

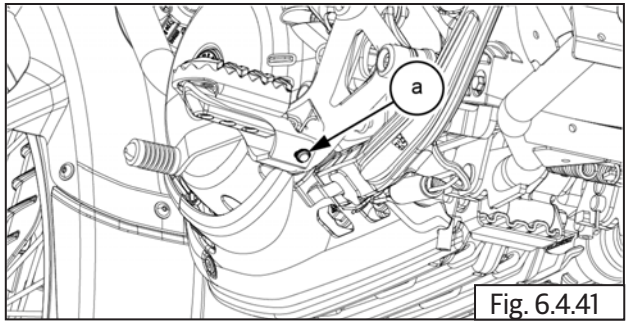

Fig. 6.4.41

	Circlip Expander

- Repeat the same rider footrest install procedure to RHS footrest **(a)**.

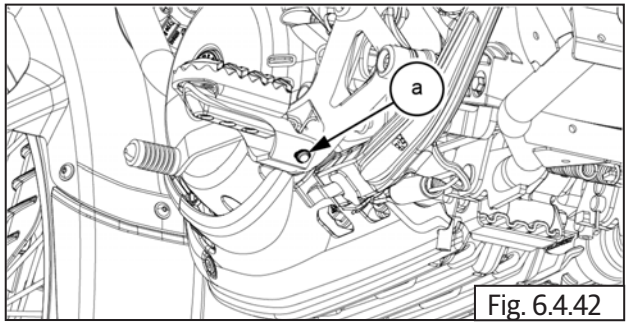

Fig. 6.4.42

MUDGUARDS

CONTENTS PAGE

6.5.1Front And Rear Mudguard..... 287

Dismantling..... 287

6.5.2 Extension Mudguard..... 288

6.5.3 Fork Protector..... 288

6.5.4 Front Upper Mudguard..... 288

6.5.5. Rear Mudguard..... 289

6.5.6License plate illuminator..... 291

6.5.7 Trafficator..... 291

6.5.8 Ambient temperature sensor..... 292

6.5.9 Rear wiring harness..... 292

6.5.10 Bottom Battery Tray..... 292

Assembly 295

6.5.11 Bottom Battery Tray..... 295

6.5.12 Rear wiring harness..... 297

6.5.13 Ambient temperature sensor..... 298

6.5.14 Trafficator..... 298

6.5.15 License plate illuminator..... 298

6.5.16. Rear Mudguard..... 299

6.5.17 Front Upper Mudguard..... 301

6.5.18 Fork Protector..... 301

6.5.19 Extension, Mudguard..... 301

6.5.20. Front Mudguard Lower..... 302

6.5. 1 Front And Rear Mudguard

Dismantling

⚠ CAUTION
Ensure the motorcycle is upright on a firm and flat surface.

- Ensure ignition and stop switch are in off position.
- Disconnect the battery terminal.
- Detach the c clip **(a)** from brake fluid pipe.

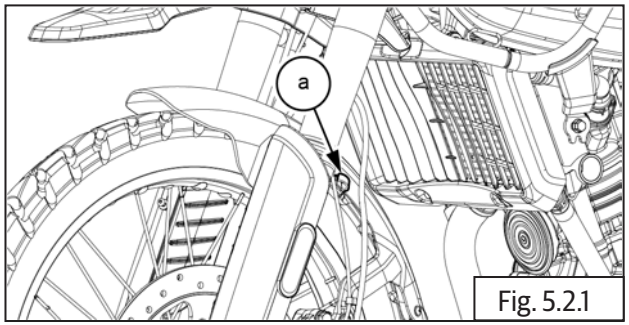

Fig. 5.2.1

- Loosen and remove 3 Nos. button head screws **(M6) (a)** from LH front mudguard.

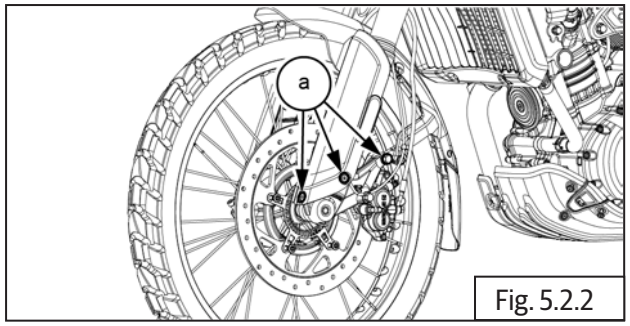

Fig. 5.2.2

	5 mm Allen socket with Ratchet

- Loosen and remove 3 Nos. Button head screws **(M6) (a)** from RH front mudguard.

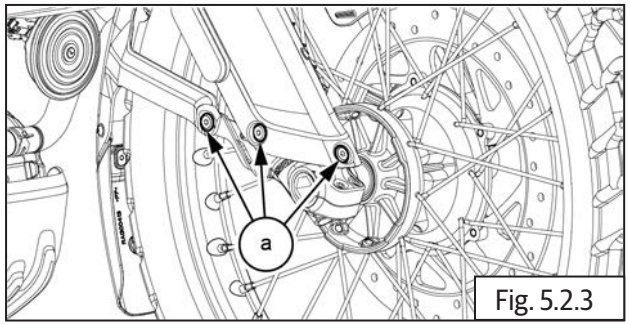

Fig. 5.2.3

	5 mm Allen socket with Ratchet

- Slightly lift mudguard **(a)** upwards, tilt it to one-side and remove from fork ends.

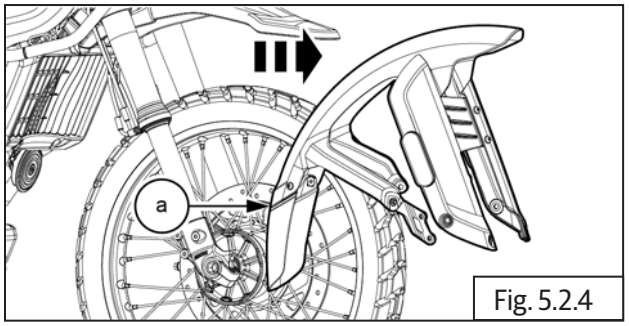

Fig. 5.2.4

- Loosen and remove 2 Nos button head screws **(M5) (a)** from bracket.

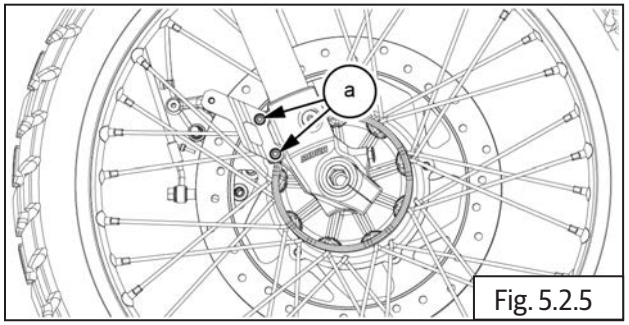

Fig. 5.2.5

	4 mm Allen socket with Ratchet

- Remove the bracket **(a)** from front RHS fork.

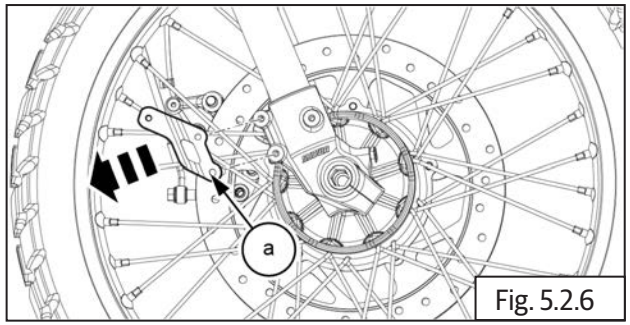

Fig. 5.2.6

6.5.2 Extension Mudguard

- Loosen and remove 3 Nos. screws **(M6) (a)** with nut and washers from extension mudguard.

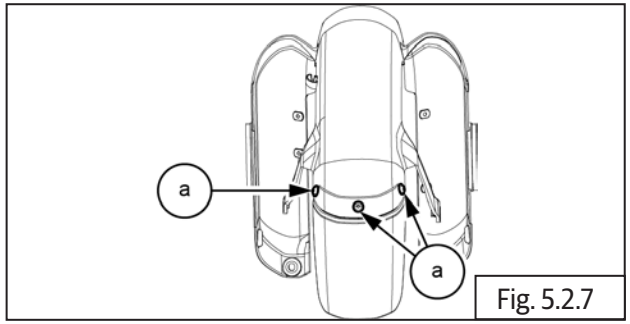

Fig. 5.2.7

	3 mm Allen socket with Ratchet

- Remove the extension mudguard **(a)**.

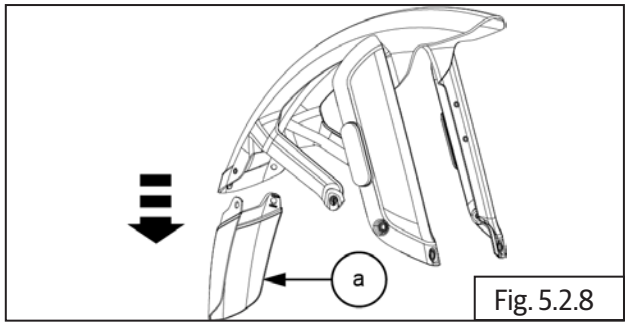

Fig. 5.2.8

6.5.3 Fork Protector

- Loosen and remove 3 Nos. screws **(M6) (a)** with nut and washers from rhs fork protector.

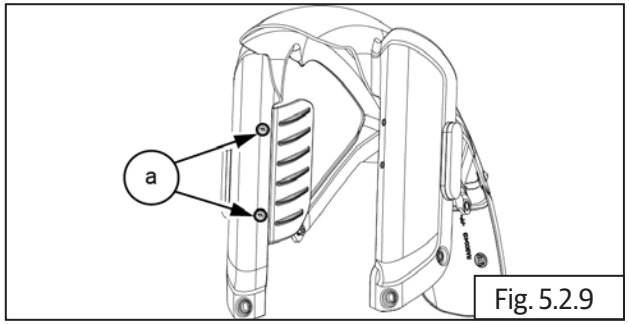

Fig. 5.2.9

	3 mm Allen socket with Ratchet

- Remove the RHS fork protector **(a)**.

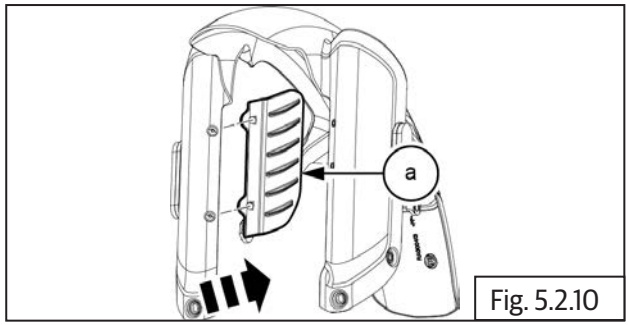

Fig. 5.2.10

- Repeat same procedure to LHS fork protector

6.5.4 Front Upper Mudguard

- Loosen and remove 4 Nos button head screws **(M5) (a)** from front Upper Mudguard

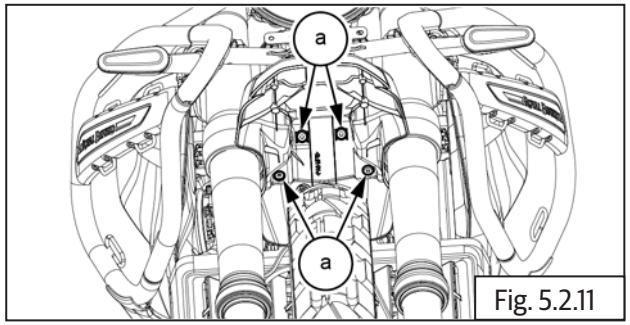

Fig. 5.2.11

	4 mm Allen socket with Ratchet

- Remove the front Upper Mudguard **(a)** from fork

ends.

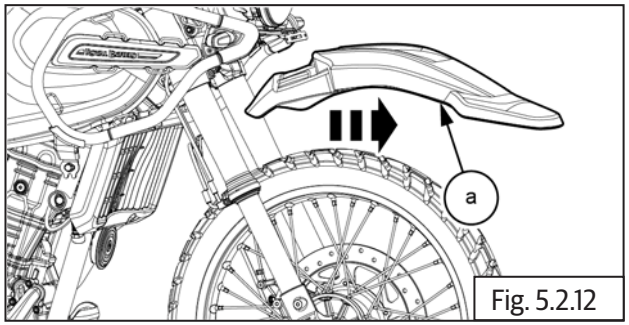

Fig. 5.2.12

6.5.5. Rear Mudguard

Dismantling

⚠ CAUTION
Ensure the motorcycle is upright on a firm and flat surface.

- Ensure ignition and stop switch are in off position.
- Disconnect the battery terminal.
- Remove the Pillion seat.
- Disconnect rear electrical connector **(a)**.

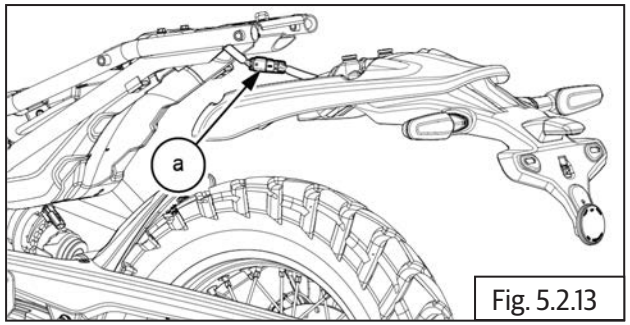

Fig. 5.2.13

- Loosen and remove 2 Nos. button head bolts **(M6) (a)** from bottom number plate hanger.

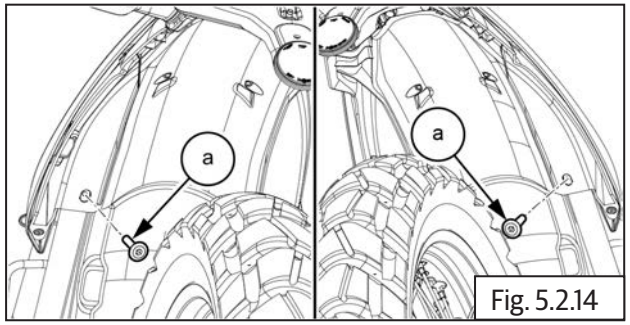

Fig. 5.2.14

	5 mm Allen socket with Ratchet

- Loosen and remove 2 Nos hex head bolts **(M6) (a)** with sleeves **(b)** from top number plate hanger.

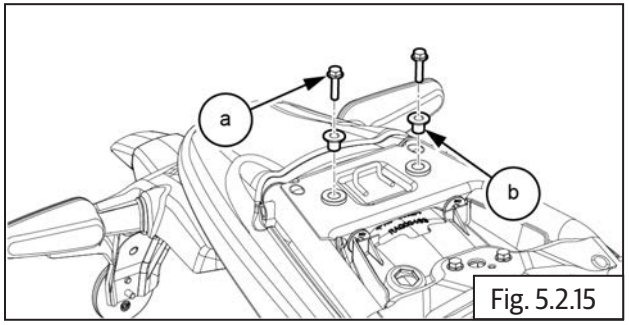

Fig. 5.2.15

	10 mm socket with Ratchet

- Remove 2Nos grommets **(a)** from rear mudguard

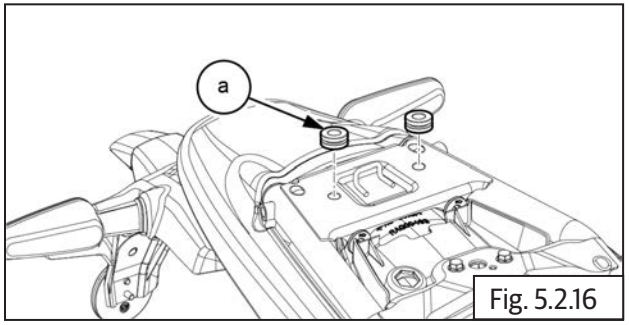

Fig. 5.2.16

- Remove rear mudguard **(a)** from frame.

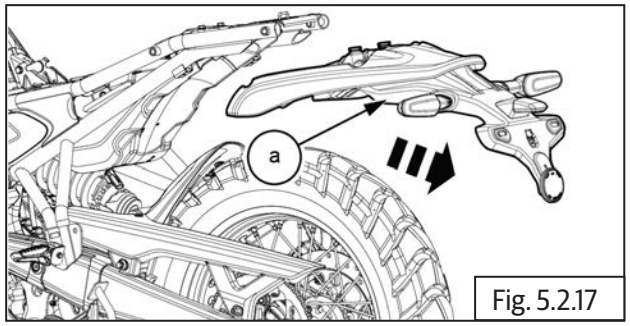

Fig. 5.2.17

- Loosen and remove 2 Nos hex head bolts **(M6) (a)** from cover.

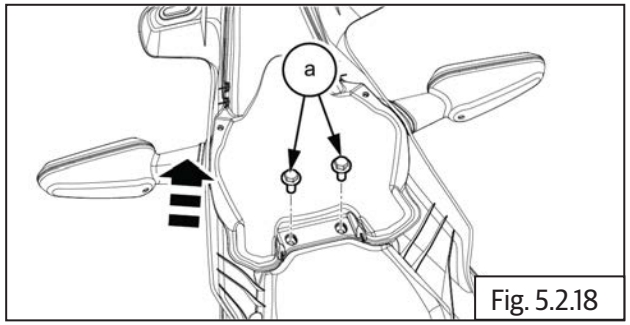

Fig. 5.2.18

	10 mm socket with Ratchet

- Loosen and remove 2 Nos screws **(a)** from cover.

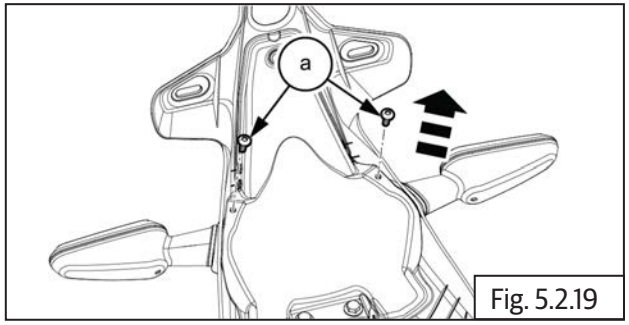

Fig. 5.2.19

	T20 Torx socket with Ratchet

- Loosen and remove button head bolt **(M5) (a)** from cover.

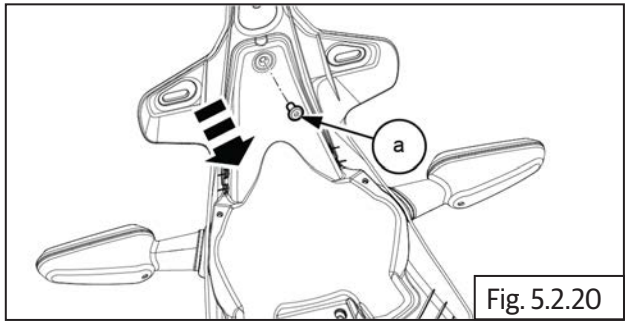

Fig. 5.2.20

	4 mm Allen socket with Ratchet

- Remove the cover **(a)** from rear mudguard .

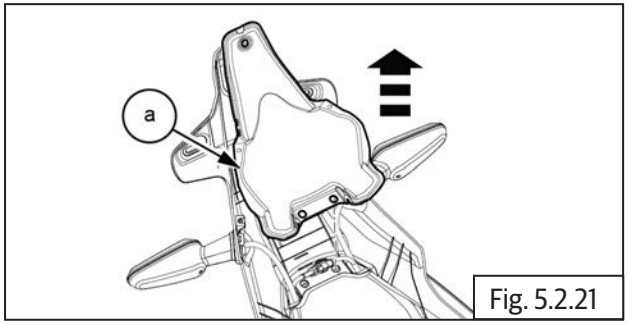

Fig. 5.2.21

- Loosen and remove 2 Nos button head bolts **(M5) (a)** from rear mudguard.

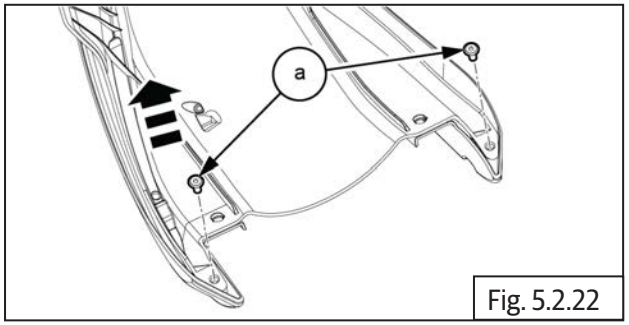

Fig. 5.2.22

	4 mm Allen socket with Ratchet

- Remove rear mudguard **(a)** from number plate hanger.

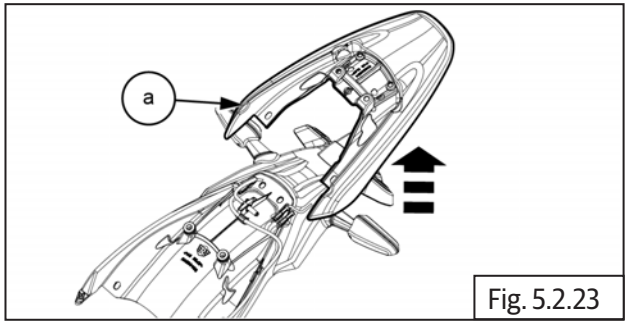

Fig. 5.2.23

- Remove rubber **(a)** from rear mudguard.

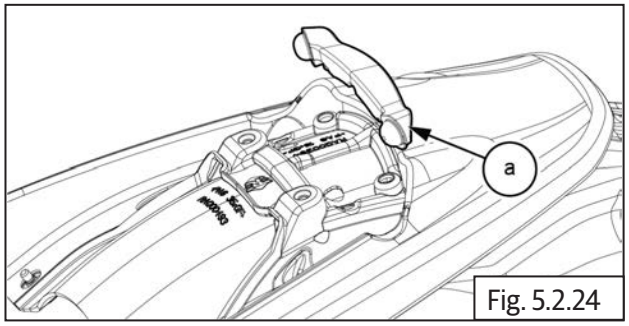

Fig. 5.2.24

- Disconnect LHS and RHS trafficator connector **(a)**.
- Disconnect license plate illuminator connector **(b)**.

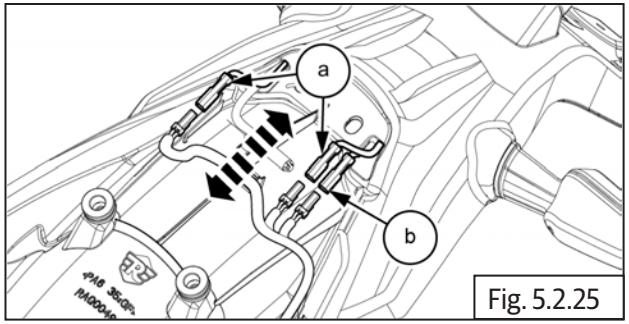

Fig. 5.2.25

6.5.6 License plate illuminator

- Loosen and remove 2 Nos button head screws **(M5) (a)** from license plate illuminator.

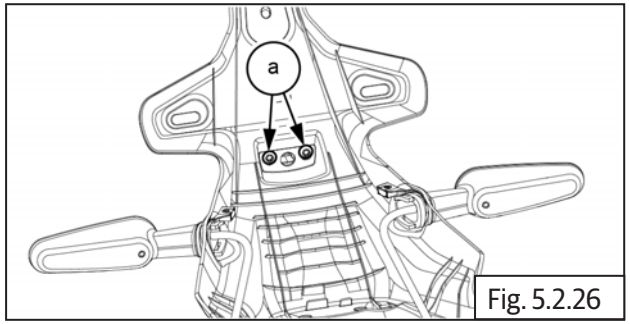

Fig. 5.2.26

	4 mm Allen socket with Ratchet

- Remove the license plate illuminator **(a)** from rear mudguard.

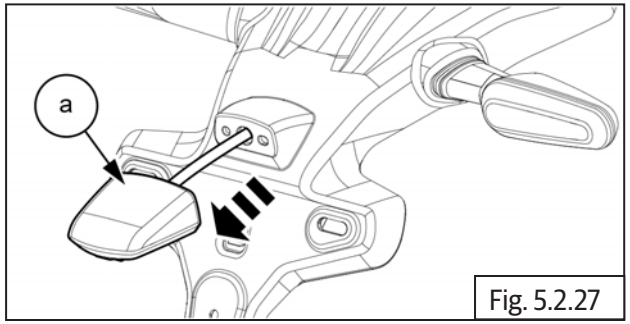

Fig. 5.2.27

6.5.7 Trafficator

- Remove end cap **(a)** from trafficator.

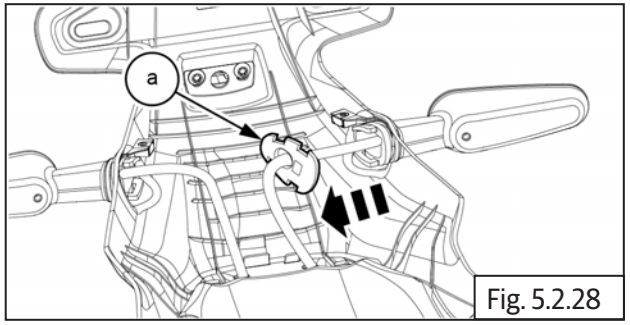

Fig. 5.2.28

- Gently Pull out and remove the rear trafficator **(a)**.

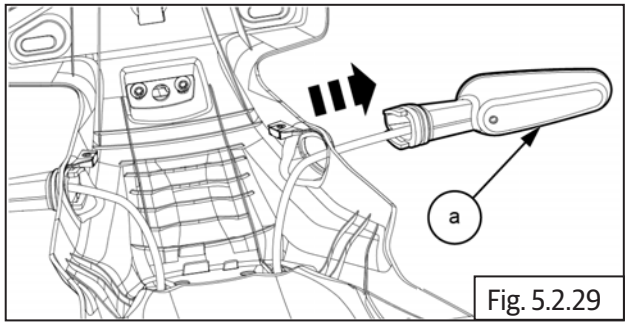

Fig. 5.2.29

Repeat the same procedure to LHS trafficator.

6.5.8 Ambient temperature sensor

- Disconnect ambient temperature sensor coupler **(a)**.

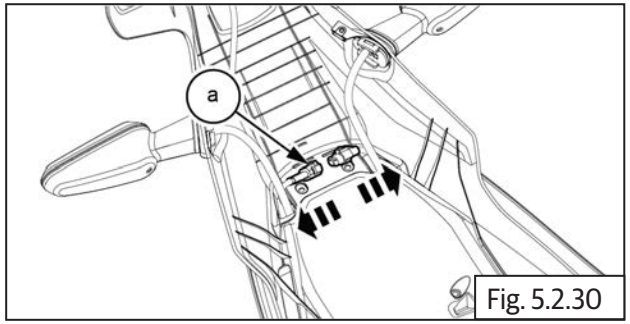

Fig. 5.2.30

- Remove ambient temperature sensor **(a)** from rear mudguard.

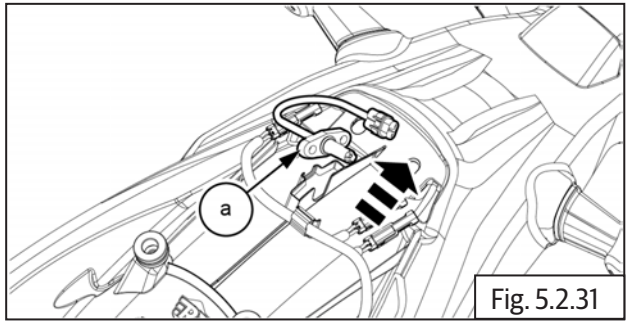

Fig. 5.2.31

6.5.9 Rear wiring harness

- Remove 2 Nos cable holder clips **(a)** from wiring harness.
- Detach the wire tag from wiring harness.

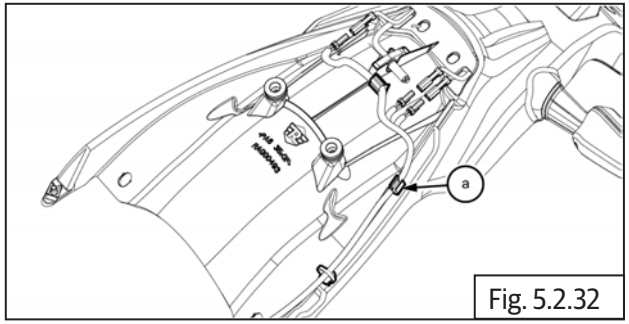

Fig. 5.2.32

- Remove wiring harness **(a)** from rear mudguard.

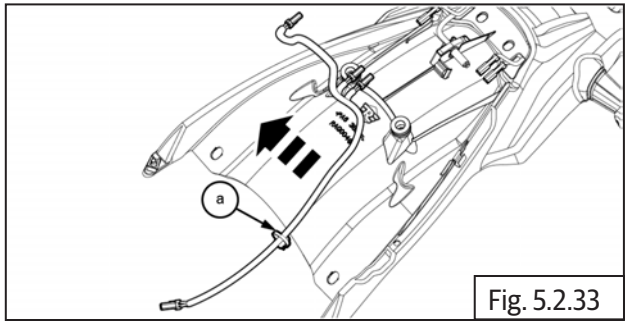

Fig. 5.2.33

6.5.10 Bottom Battery Tray

- Ensure ignition and stop switch are in off position.
- Disconnect the battery terminal.
- Remove the Pillion seat and rider seat.
- Remove the fuel tank
- Remove LH
- Remove the battery assembly.
- Remove LHS and RHS side panel
- Remove rear mudguard assembly.
- Loosen and remove 2 Nos screws **(a)** from expansion tank.

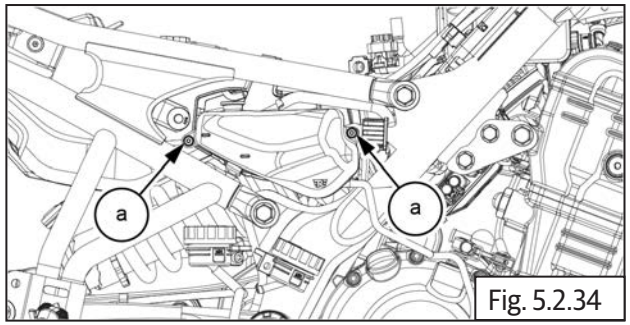

Fig. 5.2.34

	T 20 Torx

- Loosen and remove screw **(a)** from retainer braket.
- Remove retainer bracket **(b)** from chassis frame.

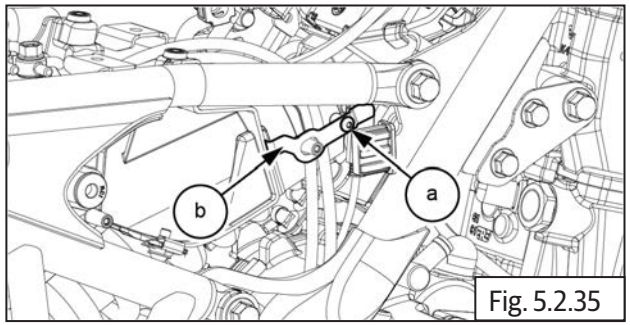

Fig. 5.2.35

	3 mm Allen Socket with Ratchet

- Loosen and remove 2Nos cap bolts **(a)** from modulator bracket.

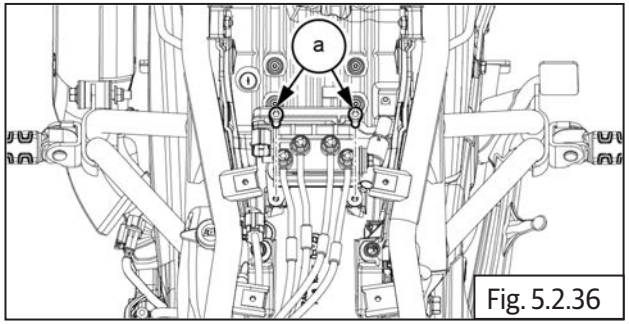

Fig. 5.2.36

	5 mm Allen Socket with Ratchet

- Remove the below listed couplers from bottom battery tray.
- 1. Side stand switch
- 2. Gear position sensor
- 3. Crank position sensor
- 4. Purge valve

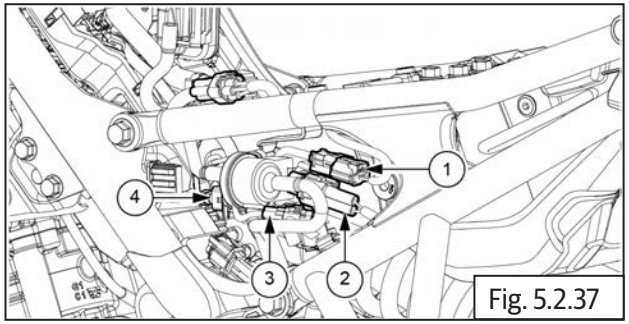

Fig. 5.2.37

- Slide and remove the purge valve with rubber boot **(a)** from bracket.

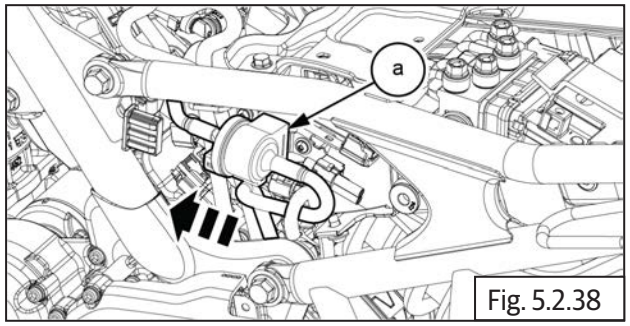

Fig. 5.2.38

- Remove the screw **(T40) (a)** with washer **(b)** from the wire guide.
- Remove the wire guide **(c)** from chassis frame .

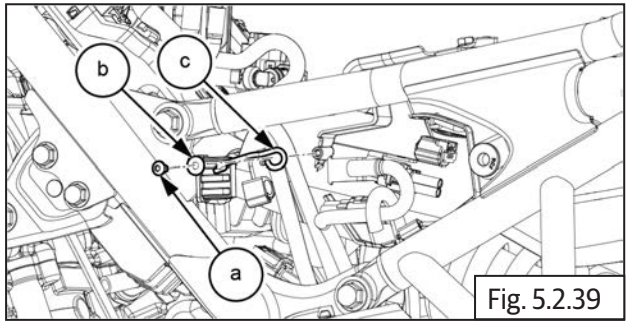

Fig. 5.2.39

	3mm Allen key

- Remove the telematics control unit with rubber boot **(a)** from battery tray.

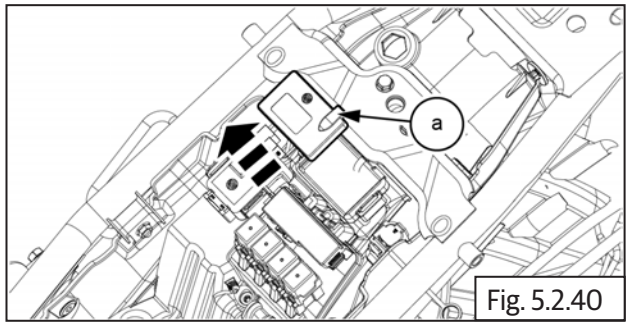

Fig. 5.2.40

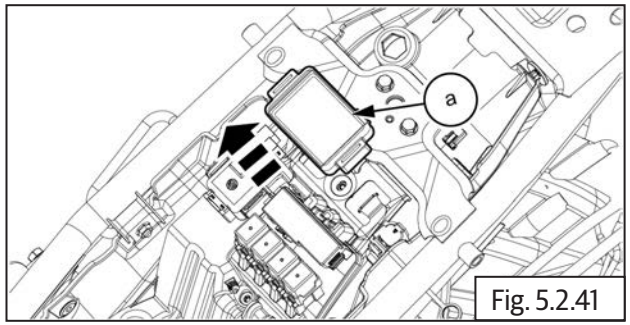

Fig. 5.2.41

- Loosen and Remove 7Nos screws **(a)** with washers **(b)** from battery tray.

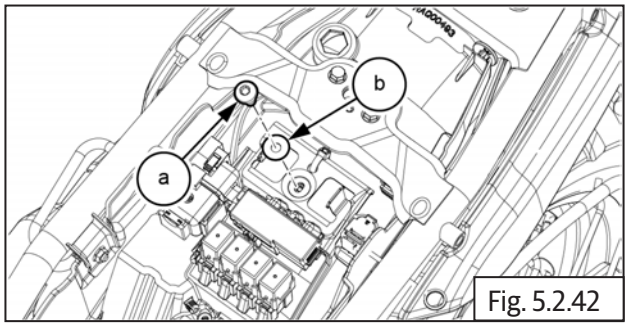

Fig. 5.2.42

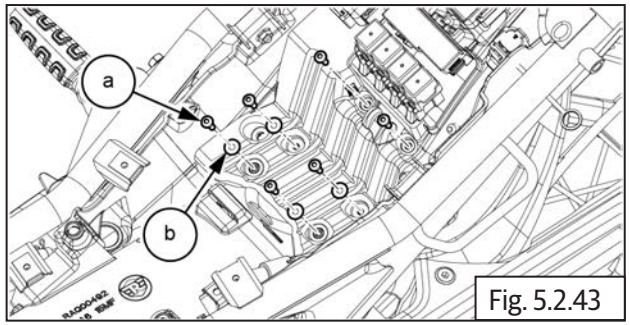

Fig. 5.2.43

	T20 Torx socket with Ratchet

- Slide and move the battery tray with relay holders **(a)**

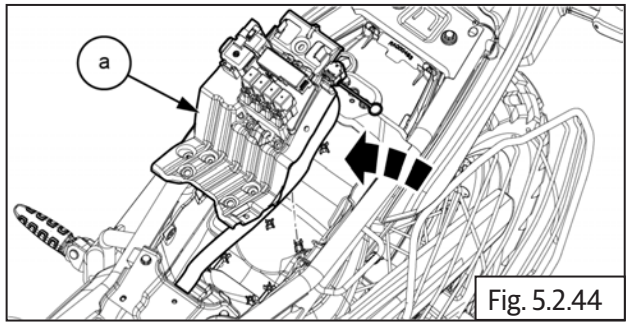

Fig. 5.2.44

- Detach the rear seat lock cable **(a)**.

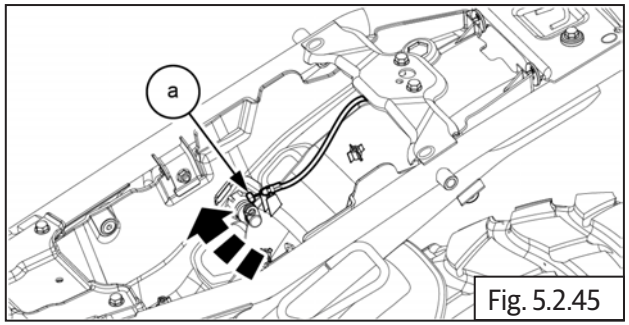

Fig. 5.2.45

- Loosen and remove 2 Nos. button head bolts **(a)** with nut **(b)**from bottom battery tray.

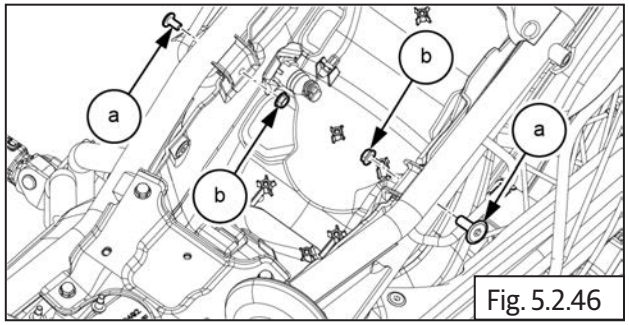

Fig. 5.2.46

	5 mm Allen socket with Ratchet 10mm Socket with Ratchet

- Loosen and remove 2 Nos. button head bolts **(M6)** **(a)** from bottom battery tray.

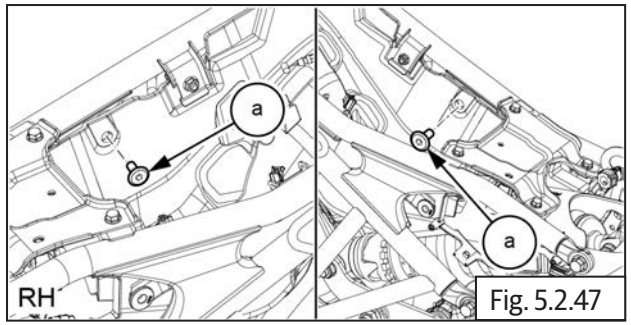

Fig. 5.2.47

	5 mm Allen socket with Ratchet

- Remove bottom battery tray **(a)** from rear subframe.

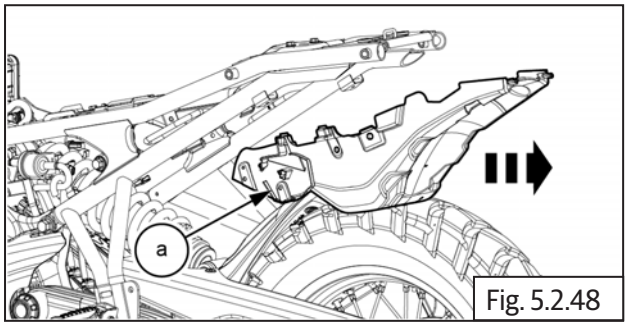

Fig. 5.2.48

- Remove grommets **(a)** from rear subframe.

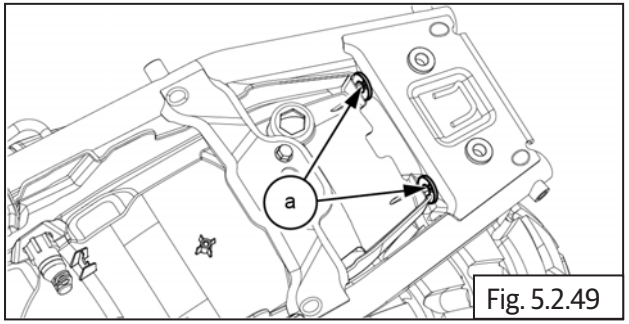

Fig. 5.2.49

Assembly

6.5.11 Bottom Battery Tray

⚠ CAUTION
DO NOT over tighten bolts and nuts as it may crack or break the plastic parts and cause vibration and noise while driving.

- Locate and fix 2 Nos grommets **(a)** on rear subframe.

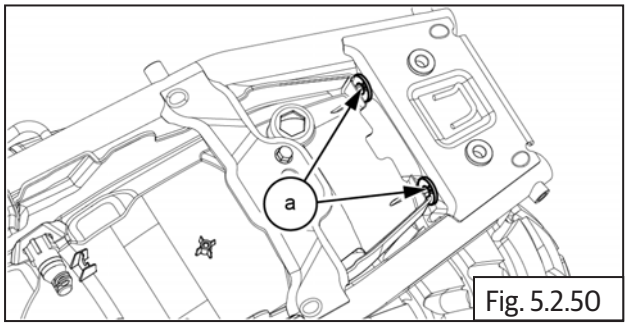

Fig. 5.2.50

- Locate and align the bottom battery tray **(a)** on rear subframe.

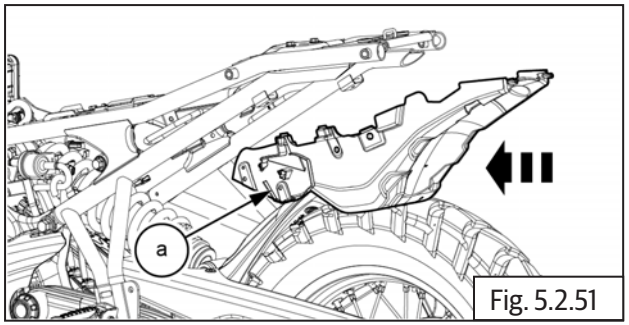

Fig. 5.2.51

- Locate and tighten 2 Nos. button head bolts **(M6) (a)** to bottom battery tray.

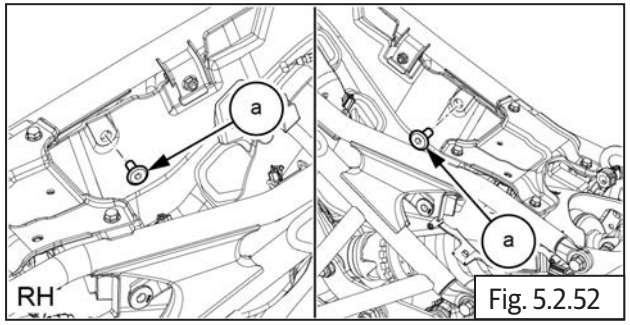

Fig. 5.2.52

	5 mm Allen socket with Ratchet
Torque	10 N-m / 1.0 kgf-m

- Locate and tighten 2 Nos. button head bolts **(a)** with nut **(b) to** bottom battery tray.

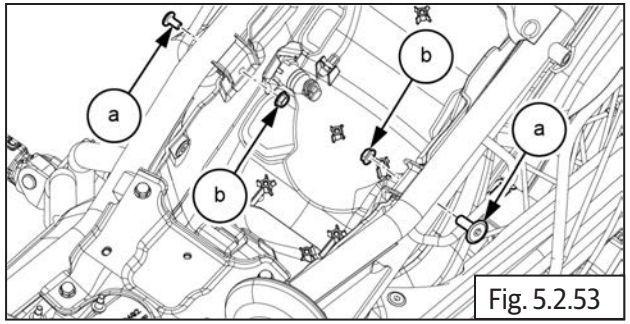

Fig. 5.2.53

	5 mm Allen socket with Ratchet 10mm Socket with Ratchet
Torque	10 N-m / 1.0 kgf-m

- Fix the rear seat lock cable **(a)**.

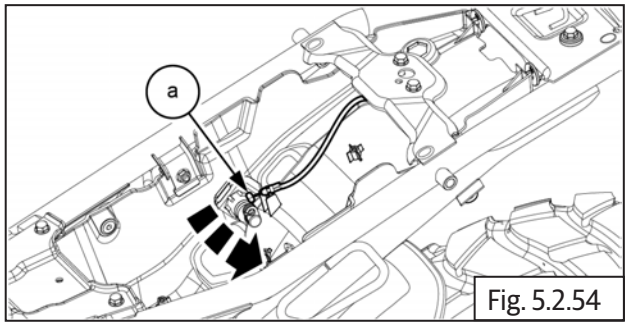

Fig. 5.2.54

- Slide and move the battery tray with relay holders **(a)**

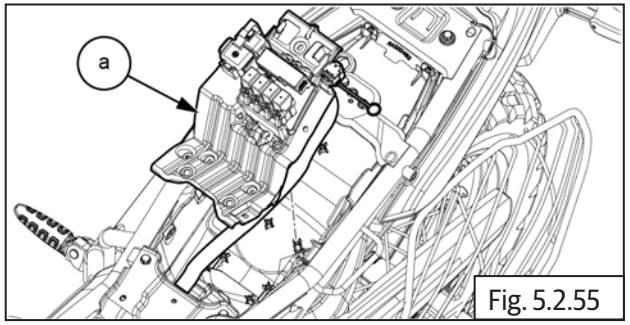

Fig. 5.2.55

- Locate and tighten 7Nos screws **(a)** with washers **(b)** on battery tray.

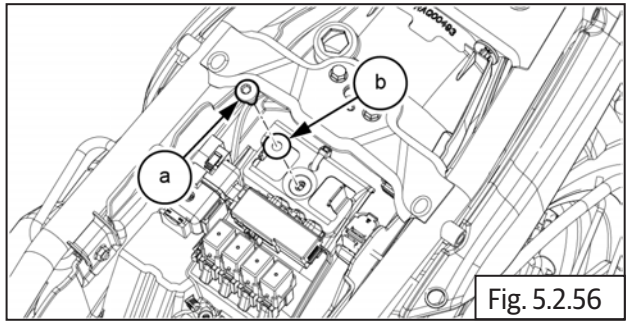

Fig. 5.2.56

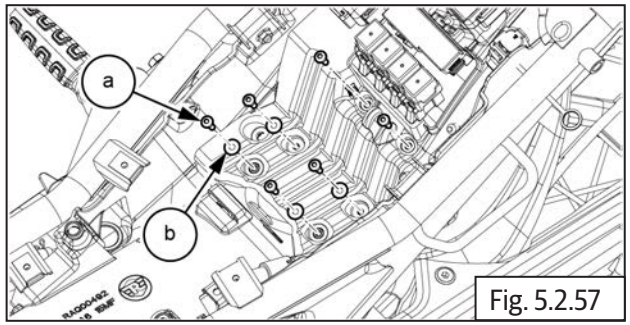

Fig. 5.2.57

- Locate and place the telematics control unit with rubber boot **(a)** on battery tray.

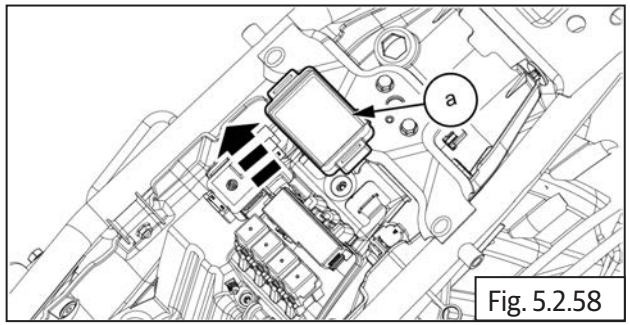

Fig. 5.2.58

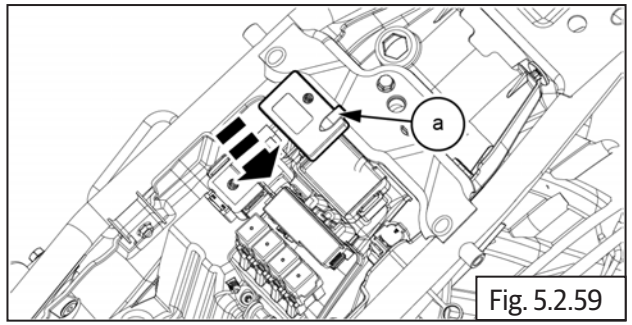

Fig. 5.2.59

- Locate the wire guide **(c)** on chassis frame .
- Locate and tighten the screw **(T40) (a)** with washer **(b)** on wire guide.

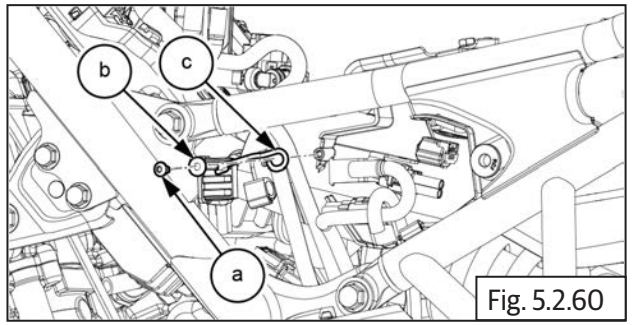

Fig. 5.2.60

	3mm Allen key
Torque	1.5N-m/0.15 kgf-m

- Slide and fix the purge valve with rubber boot **(a)** to the bracket.

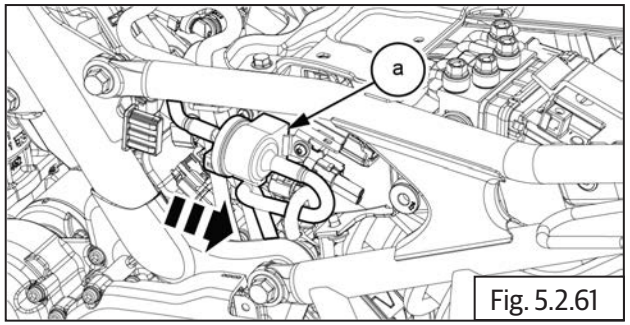

Fig. 5.2.61

- Connect the below listed couplers on bottom battery tray.
- 1. Side stand switch
- 2. Gear position sensor
- 3. Crank position sensor
- 4. Purge valve

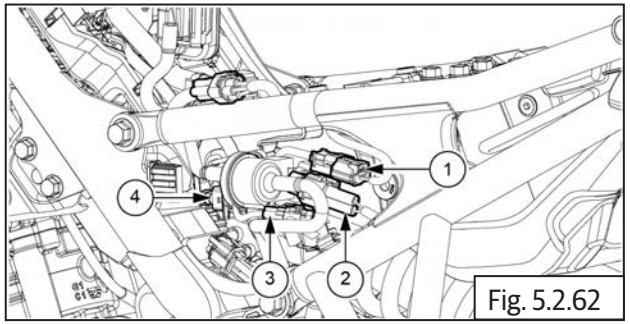

Fig. 5.2.62

- Locate and tighten 2Nos cap bolts **(a)** on modulator bracket.

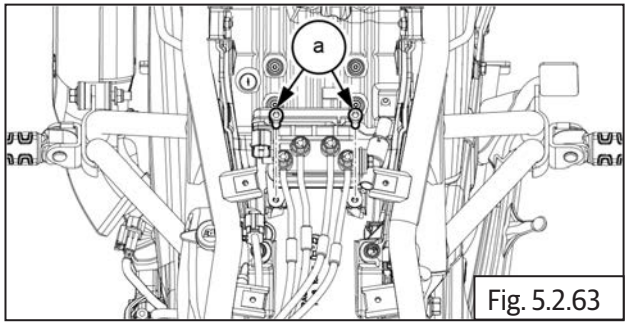

Fig. 5.2.63

	5 mm Allen Socket with Ratchet
Torque	5 N-m / 0 .5 kgf-m

- Locate retainer bracket **(b)** on chassis frame.
- Locate and tighten screw **(a)** on retainer braket.

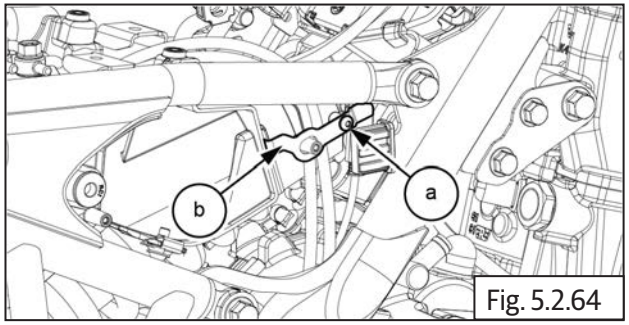

Fig. 5.2.64

	3 mm Allen Socket with Ratchet
Torque	1.5N-m/0.15 kgf-m

- Locate and tighten 2 Nos screws **(a)** on expansion tank.

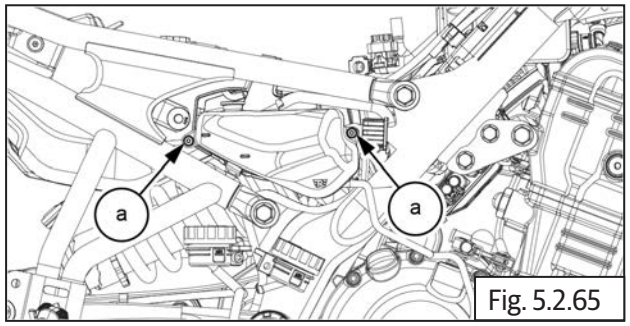

Fig. 5.2.65

	T 20 Torx Socket with Ratchet
Torque	3.5-4.5 N-m / 0.3-0.4 kgf-m

- Install rear mudguard assembly
- Install LHS and RHS side panel
- Install the battery assembly.
- Install the fuel tank
- Install the Pillion seat and rider seat.
- Connect the battery terminal.

6.5.12 Rear wiring harness

- Locate and align wiring harness **(a)** on rear mudguard.

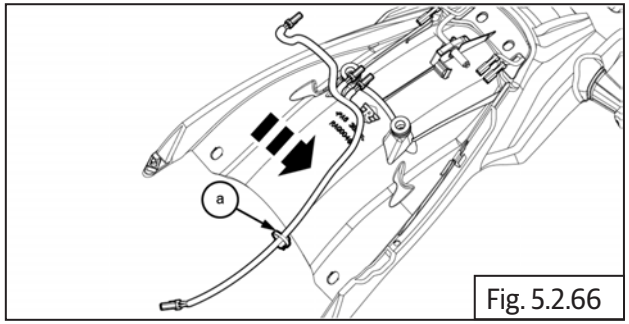

Fig. 5.2.66

- Fix the wire tag on wiring harness.
- Fix 2 Nos cable holder clips **(a)** on wiring harness.

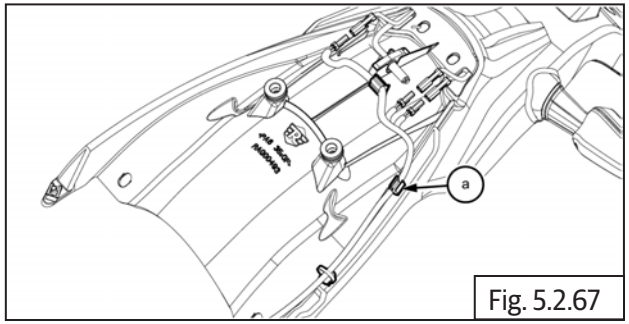

Fig. 5.2.67

6.5.13 Ambient temperature sensor

- Locate and align ambient temperature sensor **(a)** on rear mudguard.

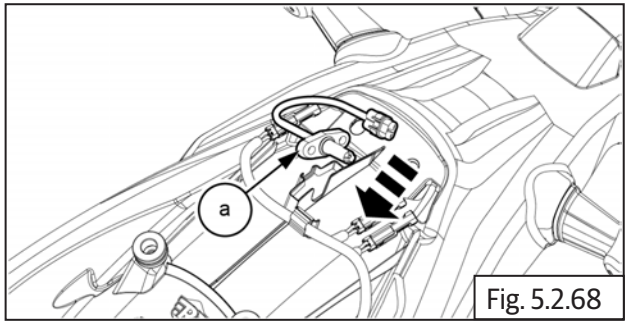

Fig. 5.2.68

- Connect ambient temperature sensor coupler **(a)**.

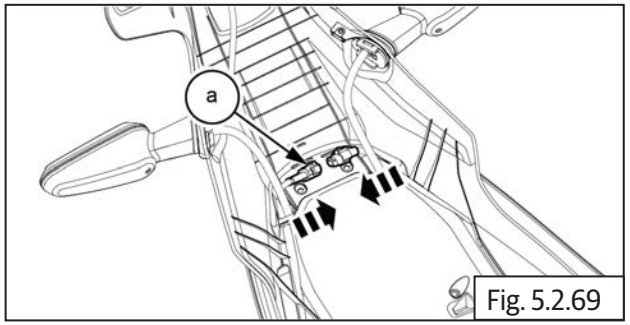

Fig. 5.2.69

6.5.14 Trafficator

- Locate and align the rear trafficator **(a)**.

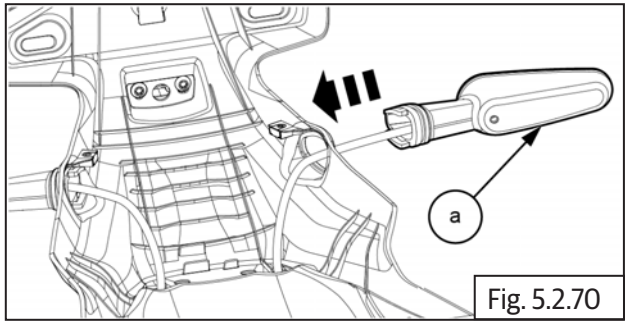

Fig. 5.2.70

- Locate and fix end cap **(a)** on trafficator.

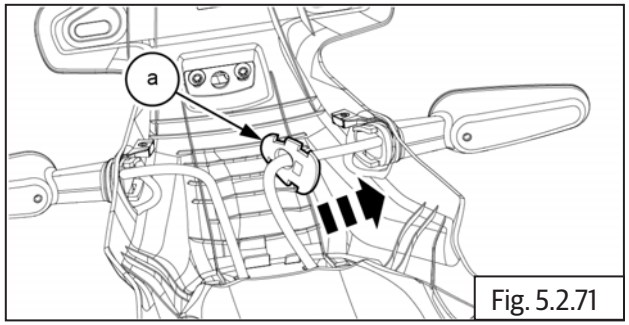

Fig. 5.2.71

Repeat the same procedure to LHS trafficator.

6.5.15 License plate illuminator

- Locate and align the license plate illuminator **(a)** on rear mudguard.

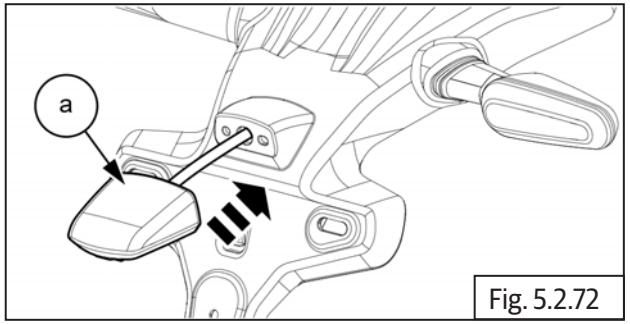

Fig. 5.2.72

- Locate and tighten 2 Nos button head screws **(M5)** **(a)** on license plate illuminator.

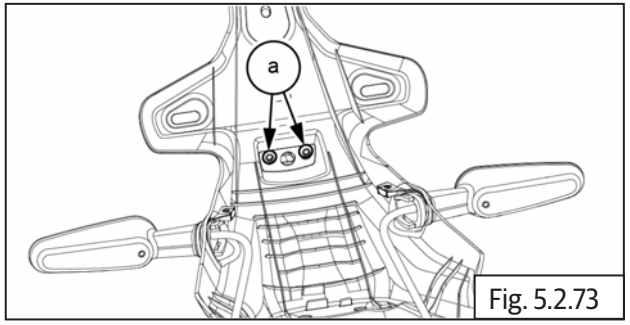

Fig. 5.2.73

	4 mm Allen socket with Ratchet
Torque	5 N-m / 0.5 kgf-m

6.5.16. Rear Mudguard

- Connect LHS and RHS trafficator connector **(a)**.
- Connect license plate illuminator connector **(b)**.

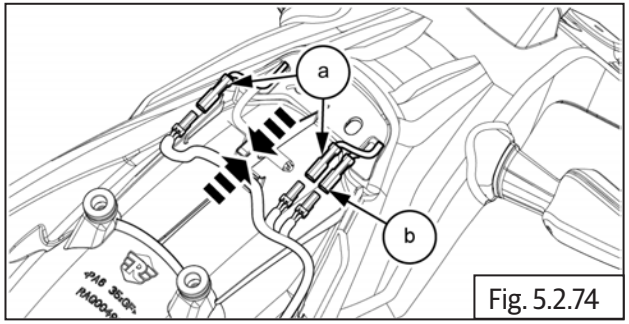

Fig. 5.2.74

- Locate and fix rubber **(a)** on rear mudguard.

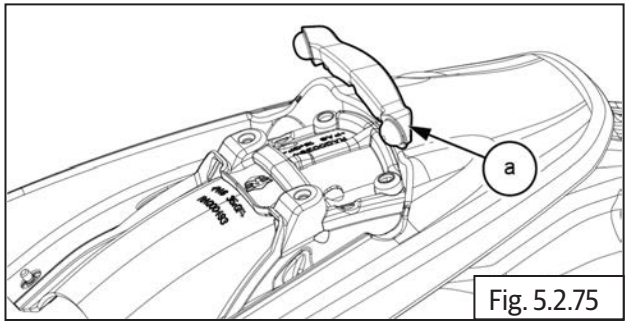

Fig. 5.2.75

- Locate the rear mudguard **(a)** on number plate hanger.

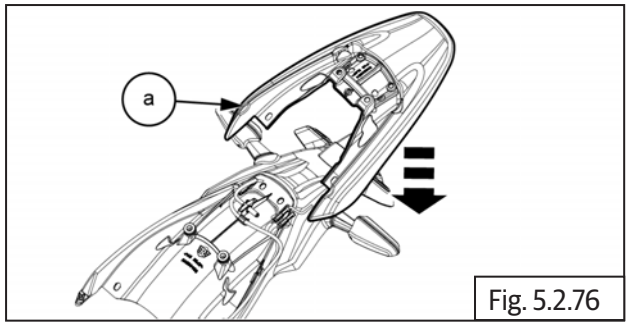

Fig. 5.2.76

- Locate and tighten 2 Nos button head bolts **(M5) (a)** on rear mudguard.

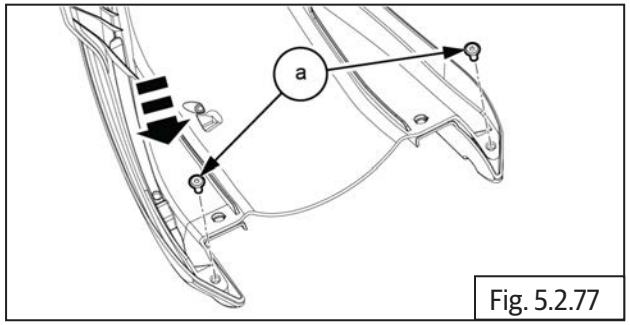

Fig. 5.2.77

	4 mm Allen socket with Ratchet
Torque	5 N-m / 0.5 kgf-m

- Locate and align the cover **(a)** from rear mudguard .

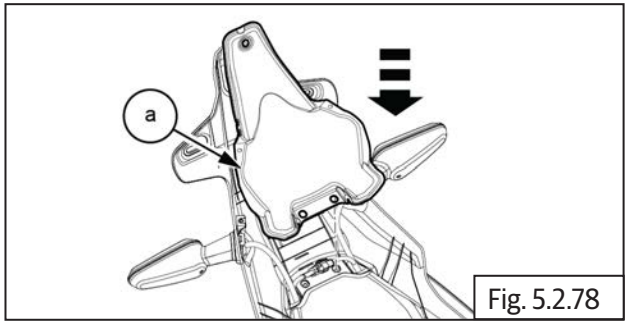

Fig. 5.2.78

- Locate and tighten the button head bolt **(M5) (a)** on cover.

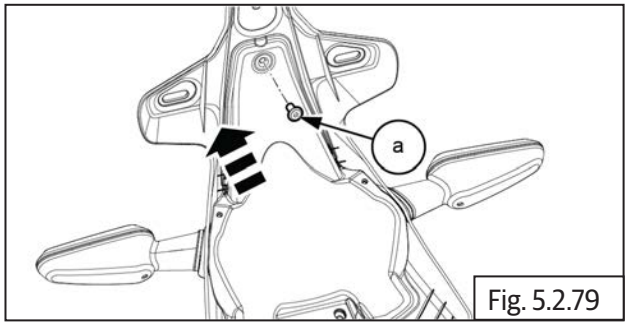

Fig. 5.2.79

	4 mm Allen socket with Ratchet
Torque	5 N-m / 0.5 kgf-m

- Locate and tighten 2 Nos screws **(a)** on cover.

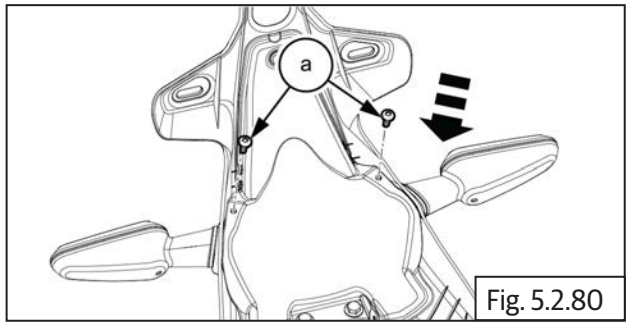

Fig. 5.2.80

	T20 Torx socket with Ratchet
Torque	1.5 N-m / 0.15 kgf-m

- Locate and tighten 2 Nos hex head bolts **(M6) (a)** from cover.

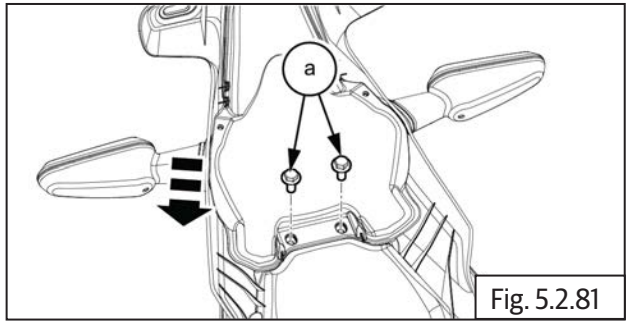

Fig. 5.2.81

	10 mm socket with Ratchet
Torque	10 N-m / 1.0 kgf-m

- Locate the rear mudguard **(a)** on frame.

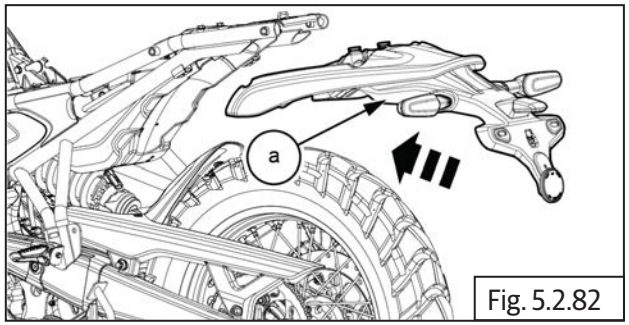

Fig. 5.2.82

- Locate and tighten 2Nos grommets **(a)** on rear mudguard

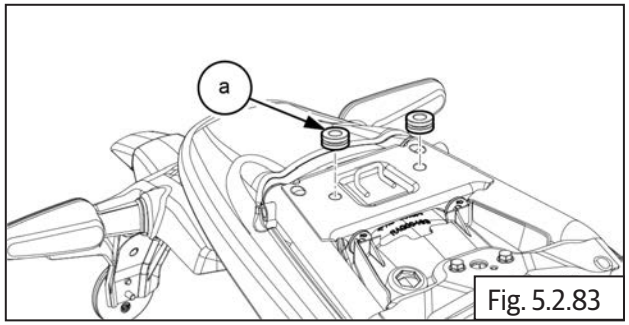

Fig. 5.2.83

- Locate and tighten 2 Nos hex head bolts **(M6) (a)** with sleeves **(b)** on top number plate hanger.

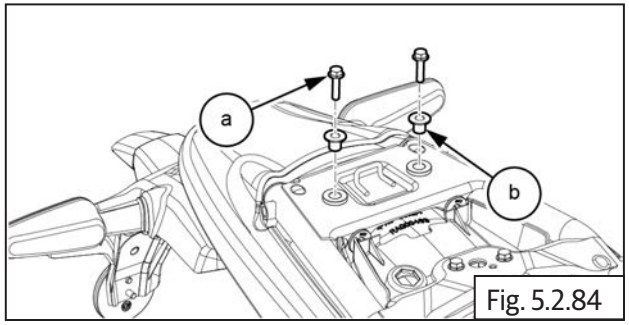

Fig. 5.2.84

	10 mm socket with Ratchet
Torque	10 N-m / 1.0 kgf-m

- Locate and tighten 2 Nos. button head bolts **(M6) (a)** on bottom number plate hanger.

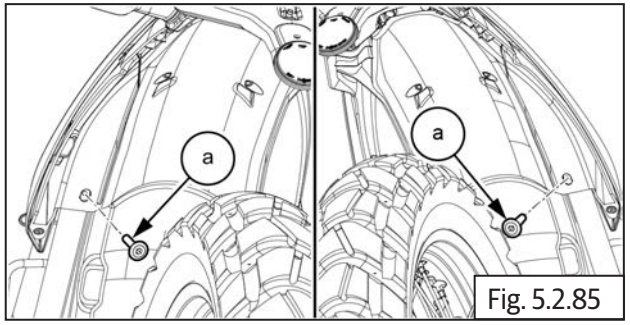

Fig. 5.2.85

	5 mm Allen socket with Ratchet
Torque	10 N-m / 1.0 kgf-m

- connect rear electrical connector **(a)**.

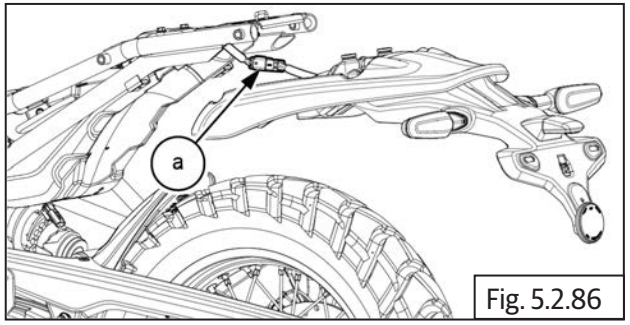

Fig. 5.2.86

- Install the Pillion seat.
- Connect the battery terminal.

6.5.17 Front Upper Mudguard

- Locate the front Upper Mudguard **(a)**on fork ends.

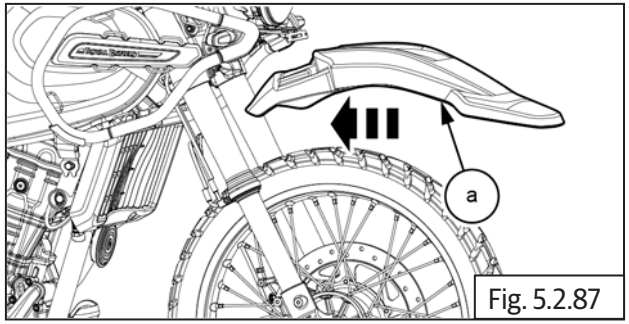

Fig. 5.2.87

- Locate and tighten 4 Nos button head screws **(M5) (a)** on front Upper Mudguard

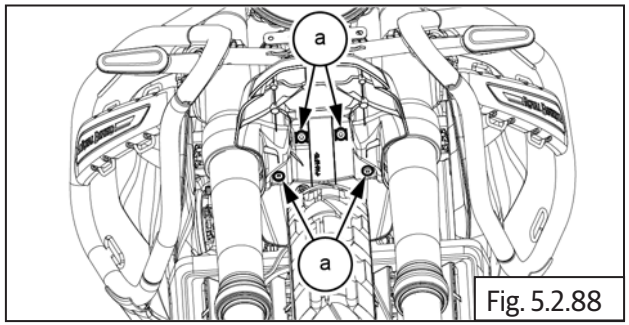

Fig. 5.2.88

	4 mm Allen socket with Ratchet
Torque	5 N-m / 0.5 kgf-m

6.5.18 Fork Protector

- Locate and align the cover **(a)** on rear mudguard .the RHS fork protector **(a)**.

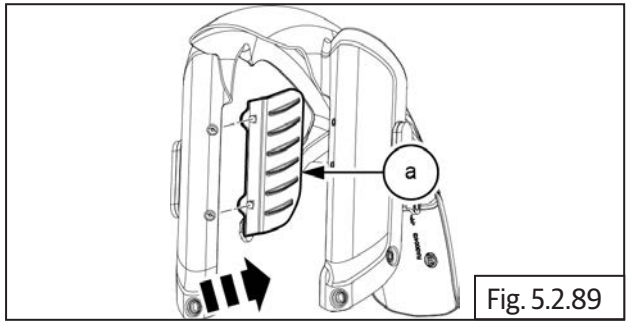

Fig. 5.2.89

- Locate and tighten 3 Nos. screws **(M6) (a)** with nut and washers on RHS fork protector.

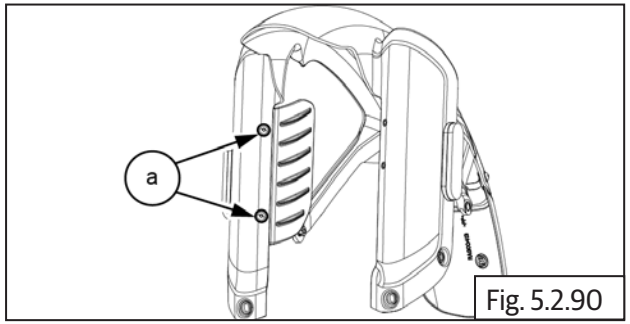

Fig. 5.2.90

	3 mm Allen Socket with Ratchet
Torque	5 N-m / 0.5 kgf-m

- Repeat same procedure to LHS fork protector

6.5.19 Extension, Mudguard

- Locate and align the extension mudguard **(a)**.

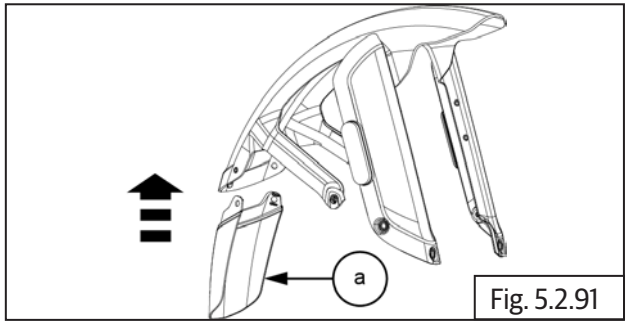

Fig. 5.2.91

- Locate and tighten 3 Nos. screws **(M6) (a)** with nut and washers on extension mudguard.

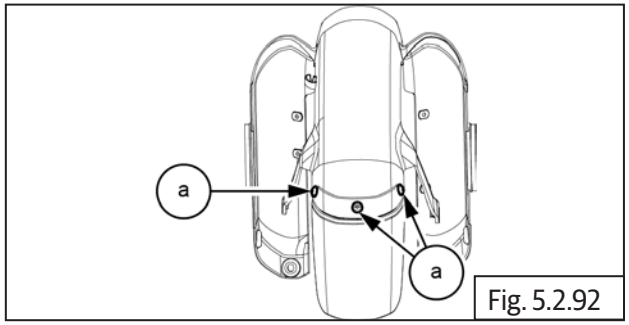

Fig. 5.2.92

	3 mm Allen Socket with Ratchet
Torque	2.8N-m / 0.28 kgf-m

⚠ CAUTION
DO NOT over tighten bolts and nuts as it may crack or break the plastic parts and cause vibration and noise while driving.

6.5.20. Front Mudguard Lower

- Locate the bracket **(a)** on front RHs fork.

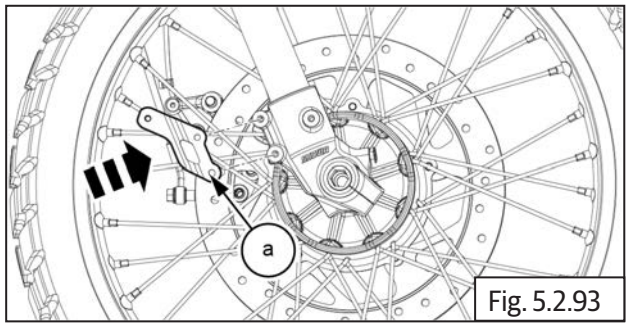

Fig. 5.2.93

- Locate and tighten 2 Nos button head screws **(M5) (a)** on bracket.

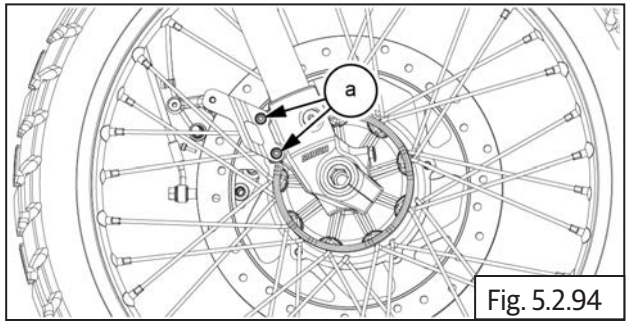

Fig. 5.2.94

	4 mm Allen socket with Ratchet
Torque	5 N-m / 0.5 kgf-m

- Locate the front mudguard (a) into fork and ensure the mounting holes are aligned.

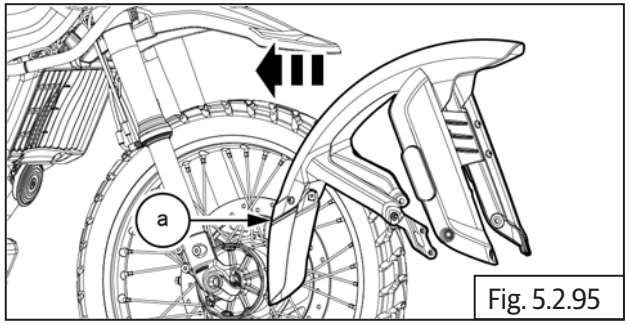

Fig. 5.2.95

- Locate and align 3 Nos. button head screws **(M6) (a)** on RHS front mudguard.

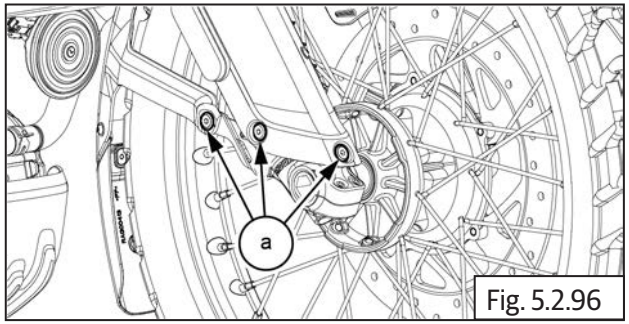

Fig. 5.2.96

	5 mm Allen socket with Ratchet

- Secure and tighten the three button head screws **(M6) (a), (b)** and **(c)** on the RHS front mudguard.

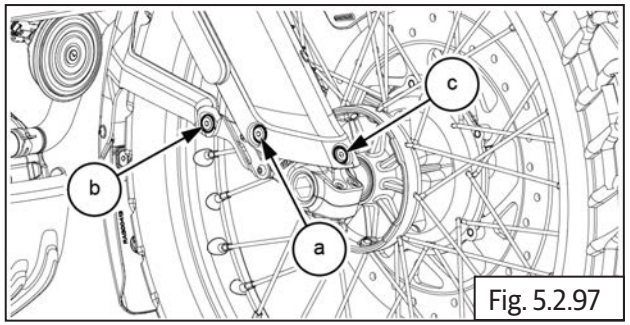

Fig. 5.2.97

	5 mm Allen socket with Ratchet
Torque	10 N-m / 1.0 kgf-m

- Locate and align 3 Nos. button head screws **(M6) (a)** on LHS front mudguard.

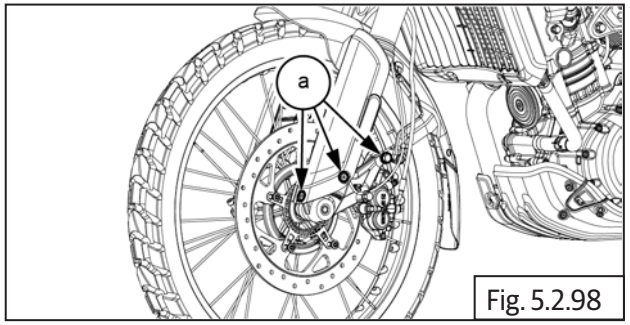

Fig. 5.2.98

	5 mm Allen socket with Ratchet

- Secure and tighten the three button head screws **(M6) (a), (b)** and **(c)** on the LHS front mudguard.

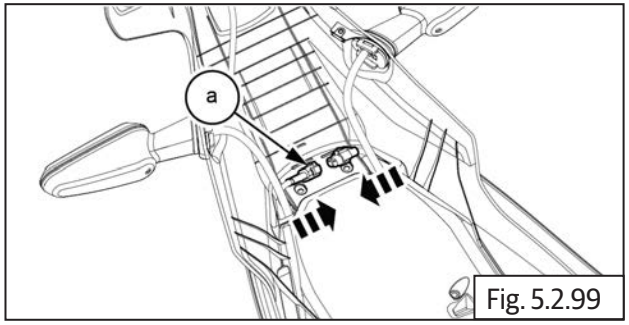

Fig. 5.2.99

	5 mm Allen socket with Ratchet
Torque	10 N-m / 1.0 kgf-m

- Fix the c clip **(a)** on brake fluid pipe.

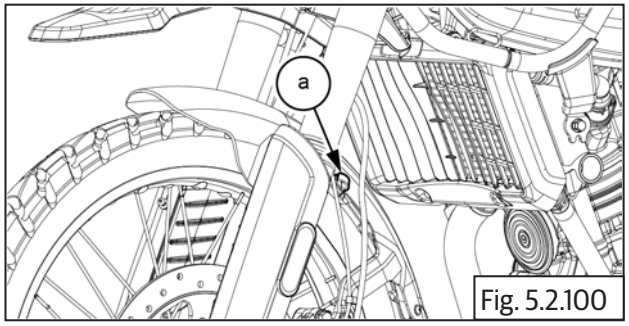

Fig. 5.2.100

- connect the battery terminal.

SIDE PANELS AND SEATS

CONTENTS **PAGE**

6.6 Side Panels and Seats..... 306

Dismantling..... 306

6.6.1. Side Panel RH..... 306

6.6.2. Side Panel LH..... 307

6.6.3. Pillion Seat..... 308

6.6.4. Rider Seat..... 308

6.6.5. Grab Rail..... 309

6.6.6. Seat Latch Lock..... 310

6.6.7. Sump Guard..... 311

Assembly..... 312

6.6.8. Sump Guard..... 312

6.6.9. Seat Latch Lock..... 31

6.6.10. Grab Rail..... 315

6.6.11. Rider Seat..... 31

6.6.12. Pillion Seat..... 316

6.6.13. Side Panel LH..... 317

6.6.14. Side Panel RH..... 318

6.6 Side Panels and Seats

Dismantling

6.6.1. Side Panel RH

NOTE
• *Ensure the motorcycle is upright on a firm and flat surface.*

- Loosen and remove button head bolt 1 no **(M6) (a)** along with washer **(b)** from RH side panel.

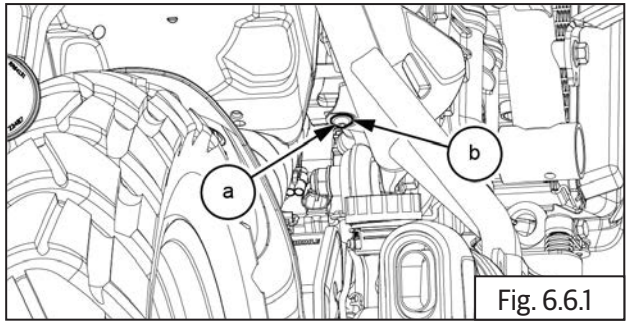

Fig. 6.6.1

	4 mm Allen Socket with Ratchet

- Gently Pull the side panel RH **(a)** outside for opening the same.

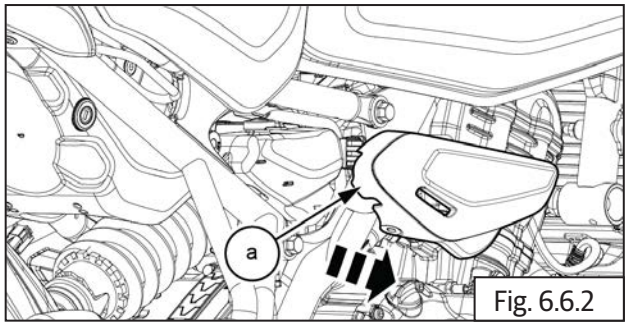

Fig. 6.6.2

- Loosen and remove 1 no screw **(M6) (a)** from RH side panel.

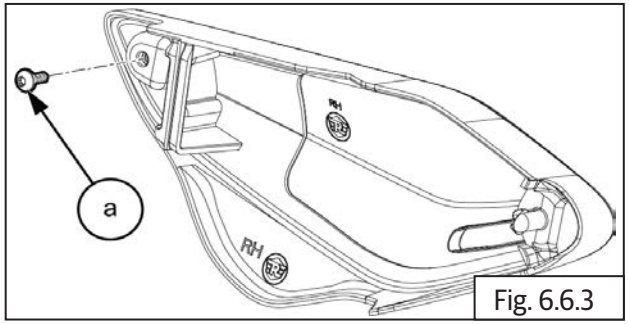

Fig. 6.6.3

	T20 Trox socket with ratchet

- Gently Pull and remove the spring nut **(a)** with "O"ring **(b)** from RH side panel.

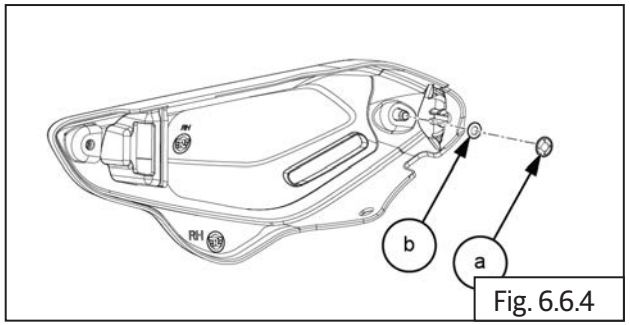

Fig. 6.6.4

	Phillips Screw driver

- Gently Pull the RH side panel cover **(a)** outside for opening the same.

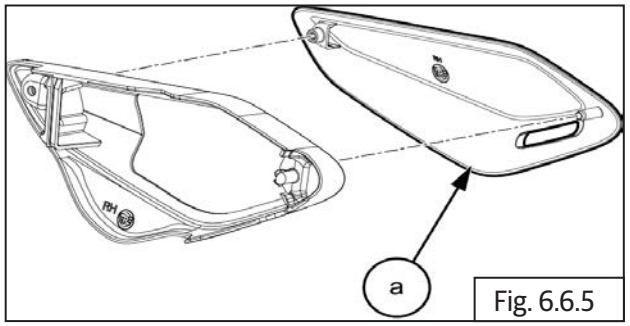

Fig. 6.6.5

- Gently Pull and remove the rubber grommet **(a)** from rear sub frame assembly.

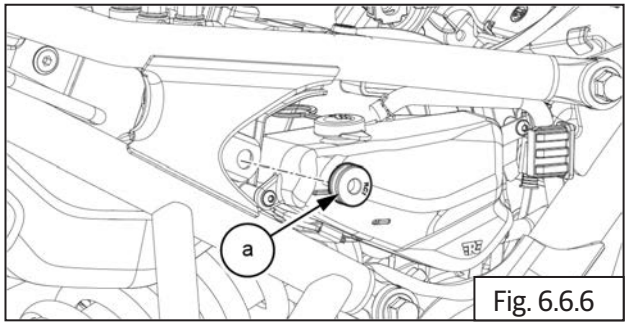

Fig. 6.6.6

- Gently Pull and remove the rubber grommet **(a)** from main frame assembly.

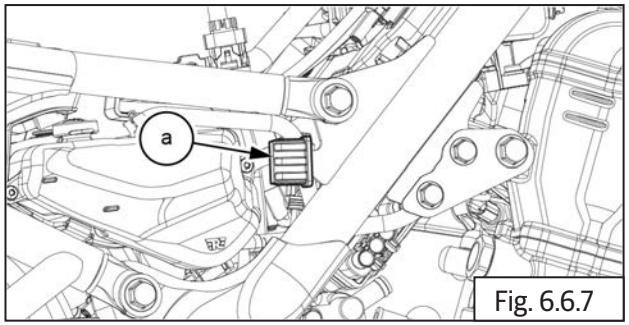

Fig. 6.6.7

6.6.2. Side Panel LH

- Loosen and remove button head bolt 1 no **(M6) (a)** along with washer **(b)** from LH side panel.

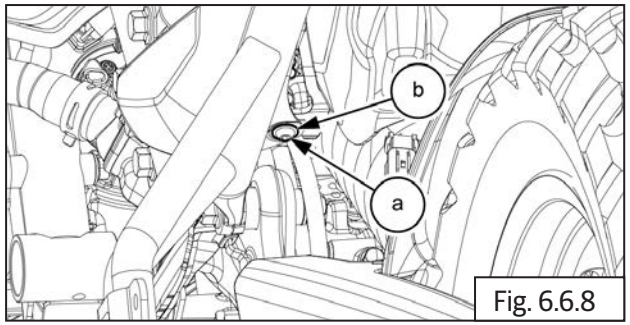

Fig. 6.6.8

	4 mm Allen Socket with Ratchet

- Gently Pull the side panel LH **(a)** outside for opening the same.

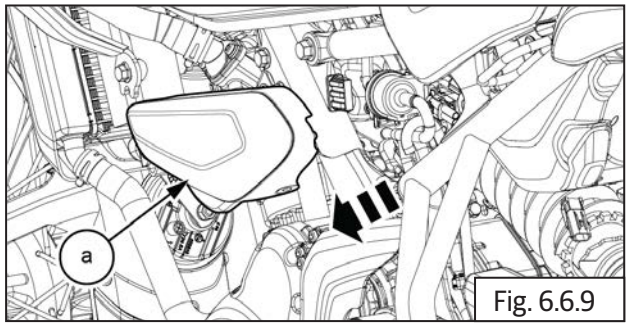

Fig. 6.6.9

- Loosen and remove 1 no screw **(M6) (a)** from LH side panel.

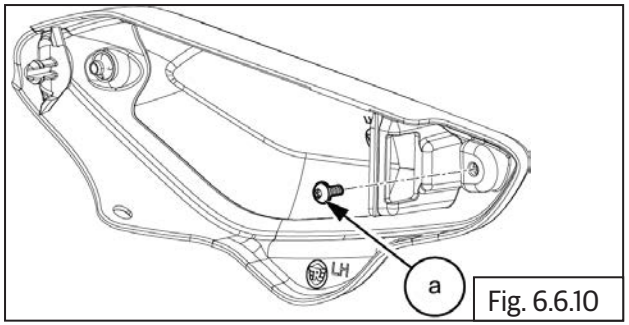

Fig. 6.6.10

	T20 Trox socket with ratchet

- Gently Pull and remove the spring nut **(a)** with "O"ring **(b)** from LH side panel.

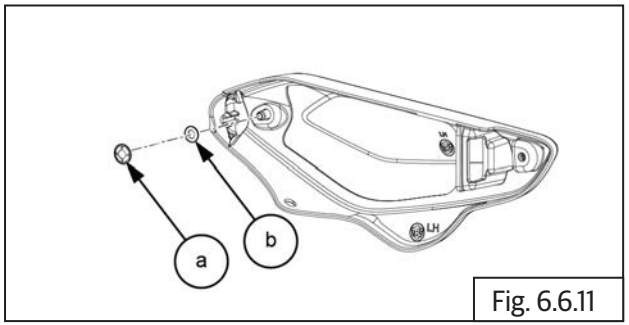

Fig. 6.6.11

	Screw driver Phillips

- Gently Pull and remove the LH side panel cover **(a)** outside for opening the same.

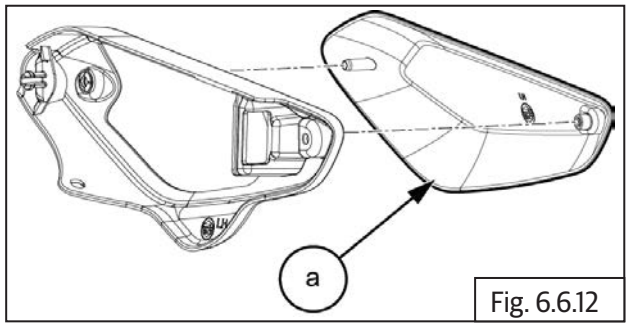

Fig. 6.6.12

- Gently Pull and remove the rubber grommet **(a)** from rear sub frame assembly.

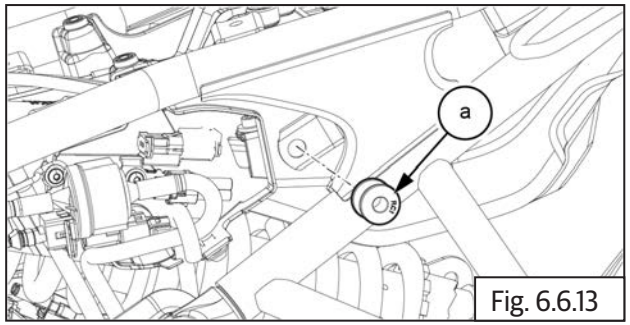

Fig. 6.6.13

- Gently Pull and remove the rubber grommet **(a)** from main frame assembly.

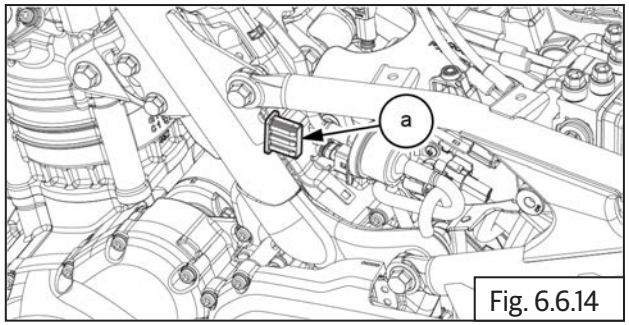

Fig. 6.6.14

6.6.3. Pillion Seat

⚠ CAUTION

Please Take care while disassembling and assembling the seats, and sheet metal parts, as any sharp edges will lead to injuries.

- Insert the key **(a)** on the seat key slot and turn clockwise direction.

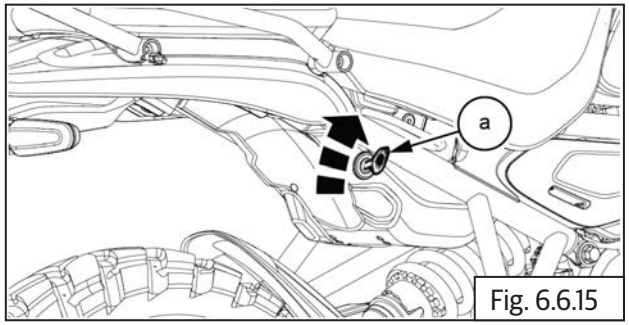

Fig. 6.6.15

- Slide the seat **(a)** towards forward direction.

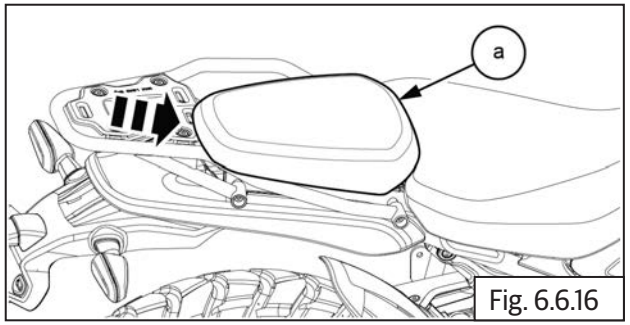

Fig. 6.6.16

- Remove the pillion seat **(a)**.

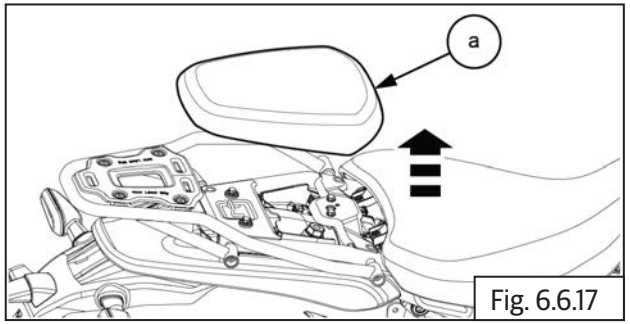

Fig. 6.6.17

6.6.4. Rider Seat

- Slide the seat **(a)** towards backward direction.

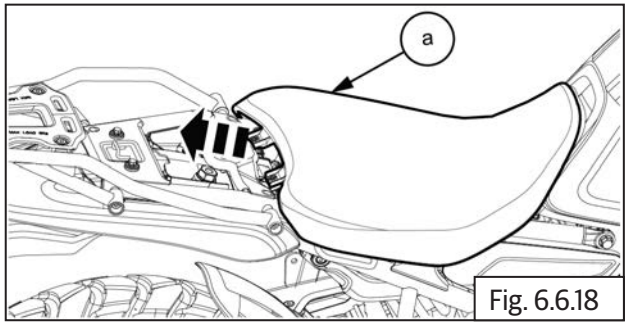

Fig. 6.6.18

- Remove the rider seat **(a)**.

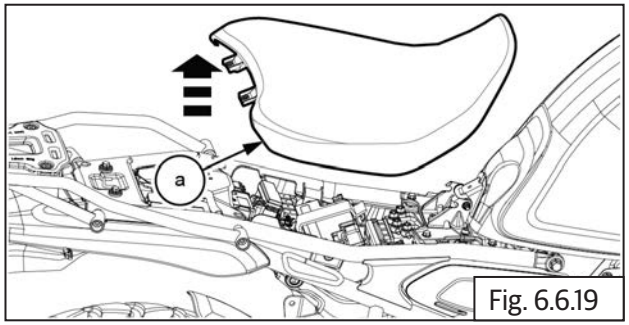

Fig. 6.6.19

NOTE
• *The rider seat height adjustment option is available in the bottom side of the rider seat.* • *If increase or decrease in the rider seat height just change the front and rear end seat rod slot.*

6.6.5. Grab Rail

- Loosen and remove 2 Nos. button head bolts **(M6) (a)** from bottom number plate hanger.

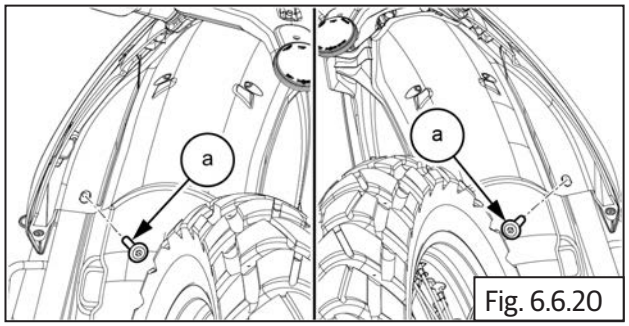

Fig. 6.6.20

	5 mm Allen socket with Ratchet

- Loosen and remove 2 Nos hex head bolts **(M6) (a)** with sleeves **(b)** from top number plate hanger.

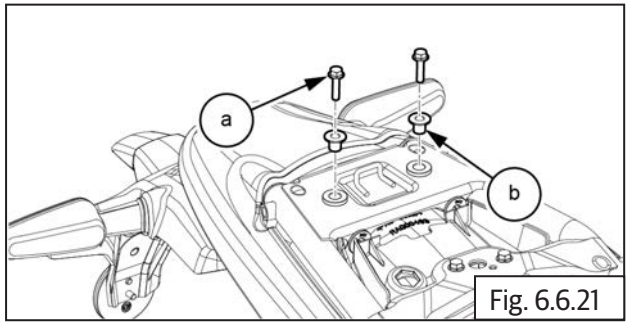

Fig. 6.6.21

	10 mm socket with Ratchet

- Loosen and remove button head bolts 4 nos **(M6) (a)** grab rail top plate.

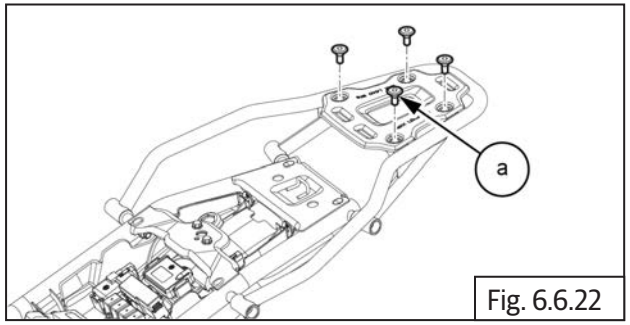

Fig. 6.6.22

	5 mm Allen Socket with Ratchet

- Remove the grab rail top plate **(a)** from grab rail assembly.

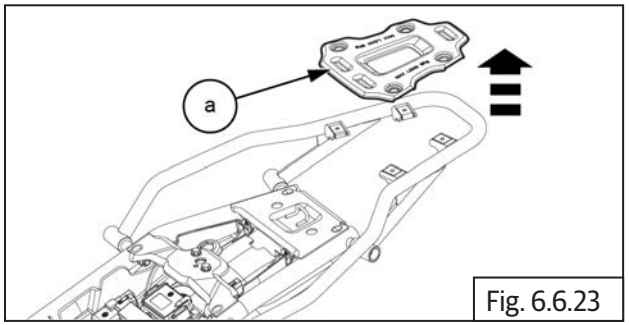

Fig. 6.6.23

- Loosen and remove cap head bolts 2 nos **(M8) (a)** along with washer **(B)** and nut **(C)** grab rail mounting front .

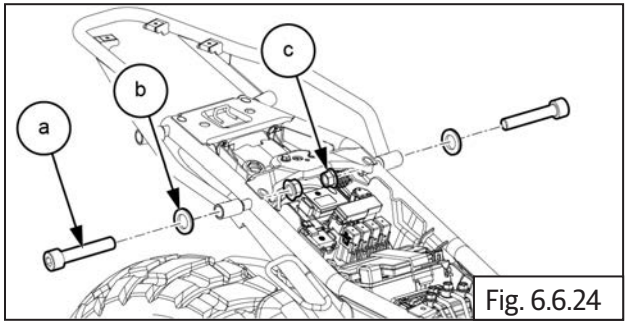

Fig. 6.6.24

	6 mm Allen Socket with Ratchet 10 mm Double end Spanner

- Loosen and remove cap head bolts 2 nos **(M8)** **(a)** along with washer **(B)** and nut **(C)** grab rail mounting rear.

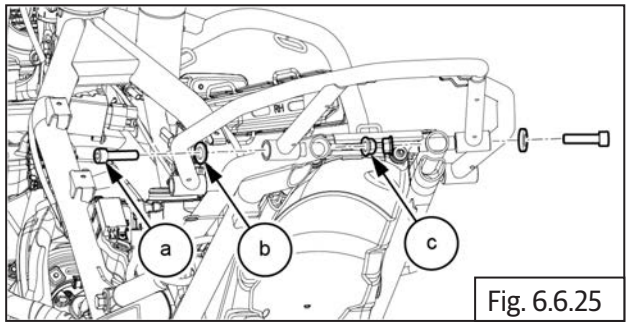

Fig. 6.6.25

	6 mm Allen Socket with Ratchet 10 mm Double end Spanner

- Remove grab rail assembly **(a)** from rear sub frame assembly.

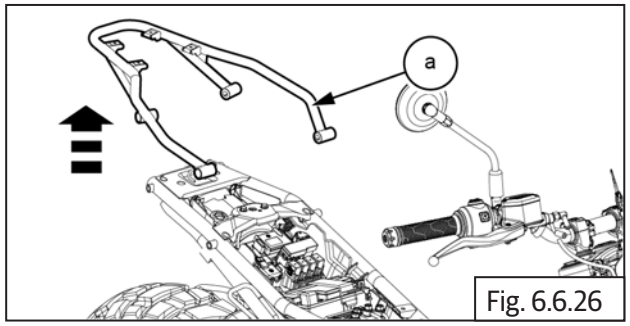

Fig. 6.6.26

6.6.6 Seat latch lock

- Loosen and Remove 7Nos screws **(a)** with washers **(b)** from battery tray.

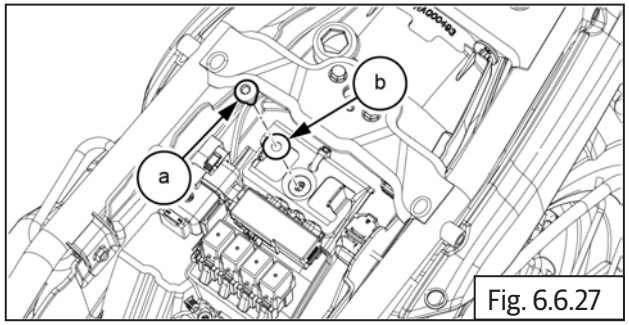

Fig. 6.6.27

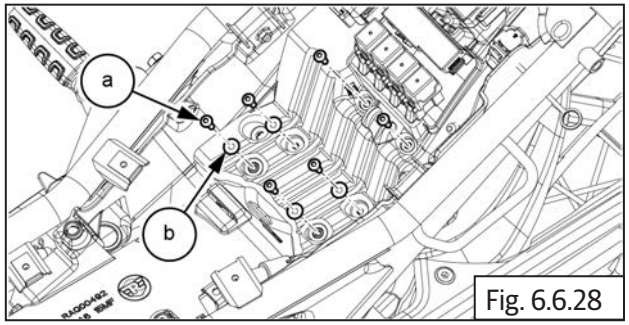

Fig. 6.6.28

	T20 Torx socket with Ratchet

- Detach the rear seat lock cable **(a)**.

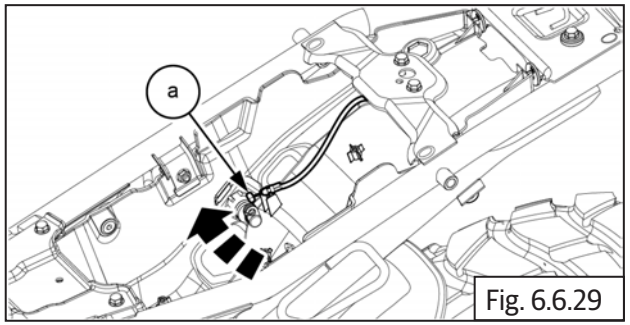

Fig. 6.6.29

- Loosen and remove hex head bolts **(a)** with nuts **(b)** 2 nos **(M6)** from seat latch lock.
- Remove the seat latch lock with cable.

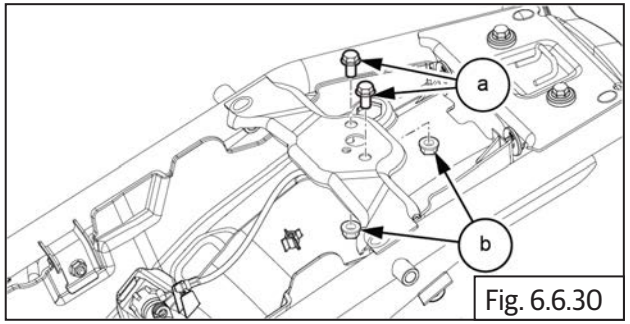

Fig. 6.6.30

	10mm Socket with Ratchet

- Detach the cable **(a)** from seat latch.

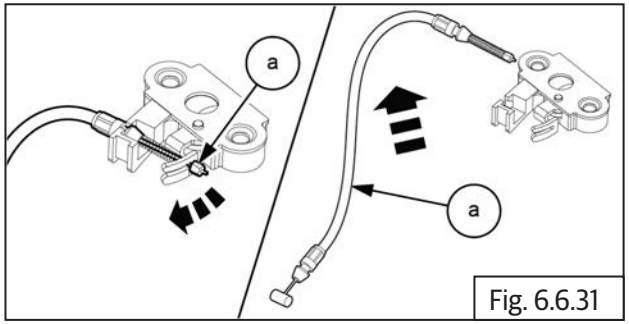

Fig. 6.6.31

- Slide and remove seat lock clip **(a)**.

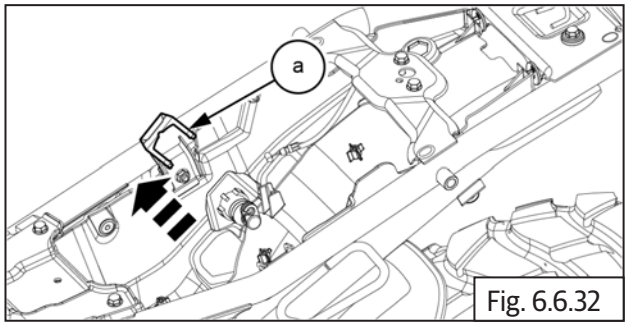

Fig. 6.6.32

	10mm Socket with Ratchet

- Remove the seat key lock set **(a)** from bottom battery tray.

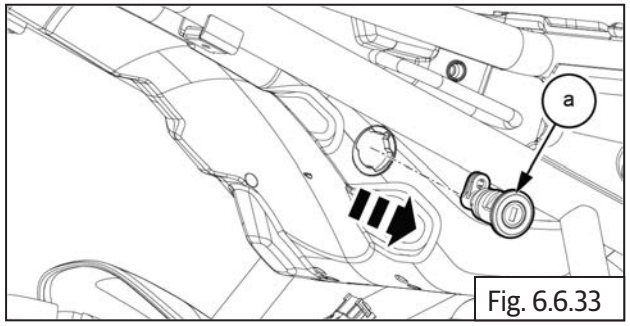

Fig. 6.6.33

6.6.7. Sump Guard

- Loosen and remove button head bolts 2 nos **(M6) (a)** from sump guard bottom.

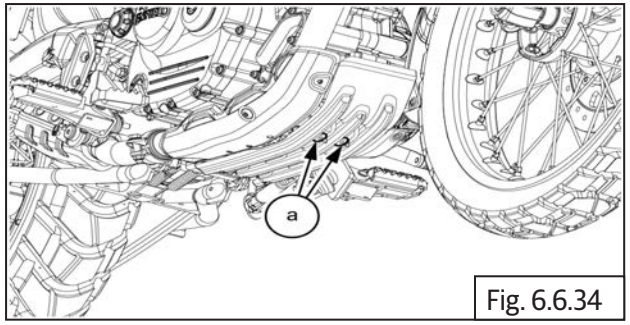

Fig. 6.6.34

	5 mm Allen Socket with Ratchet

- Gently Pull the sump guard **(a)** outside from bracket.

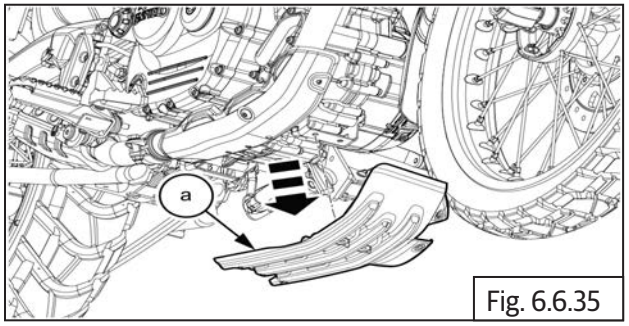

Fig. 6.6.35

- Loosen and remove button head bolts 3 nos **(M6) (a)** from sump guard.

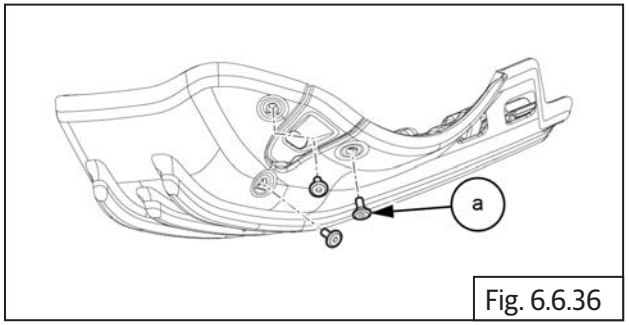

Fig. 6.6.36

	4 mm Allen Socket with Ratchet

- Remove the sump guard insert panel **(a)** from sump guard.

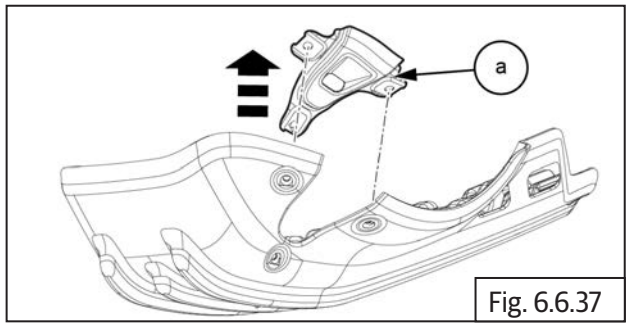

Fig. 6.6.37

- Loosen and remove flange head bolt **(M10) (a)** with nut **(b)** from engine.

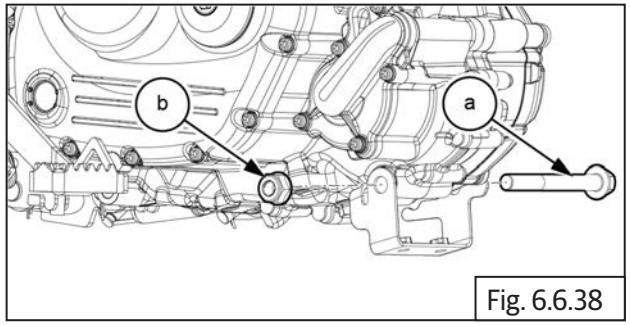

Fig. 6.6.38

	14 mm Socket with Ratchet 17 mm Double end Spanner

- Remove the sump guard bracket front **(a)** from engine.

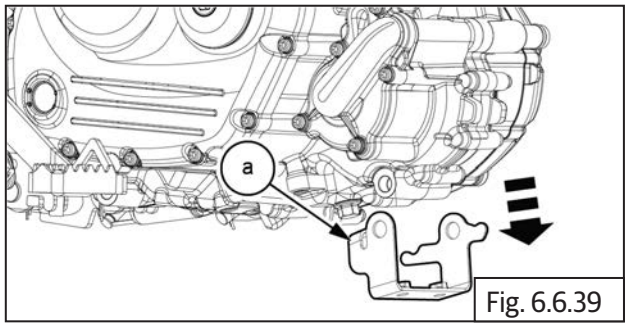

Fig. 6.6.39

- Loosen and remove flange head bolt **(M10) (a)** with nut **(b)** from engine.

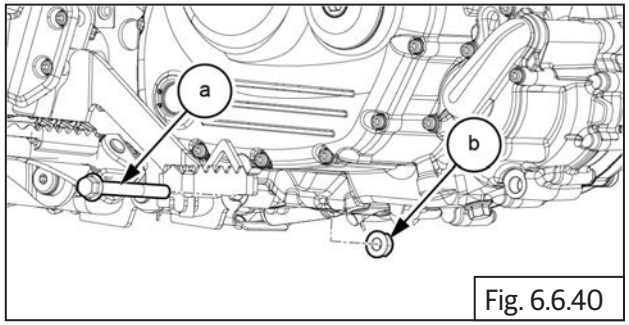

Fig. 6.6.40

	14 mm Socket with Ratchet 17 mm Double end Spanner

- Remove the sump guard bracket rear **(a)** from engine.

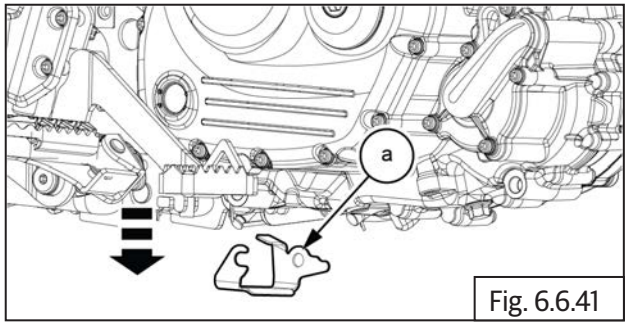

Fig. 6.6.41

Assembly

6.6.8. Sump Guard

- Locate the sump guard bracket rear **(a)** into engine.

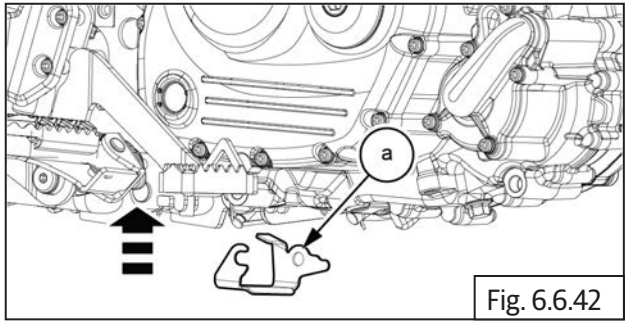

Fig. 6.6.42

- Locate and tighten flange head bolt **(M10) (a)** with nut **(b)** into engine.

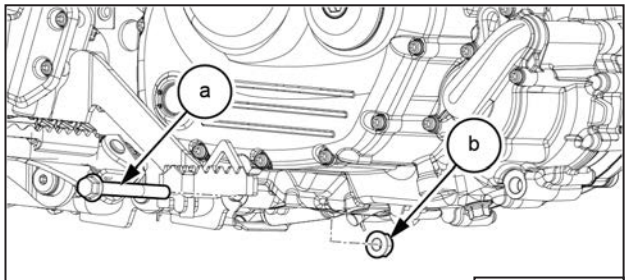

Fig. 6.6.43

	14 mm Socket with Ratchet 17 mm Double end Spanner
Torque	45 Nm / 4.5 kgf-m

- Locate the sump guard bracket front **(a)** into engine.

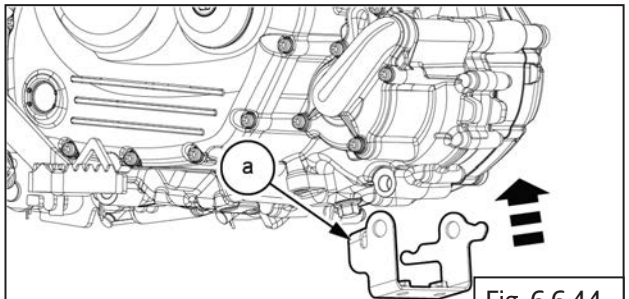

Fig. 6.6.44

- Locate and tighten flange head bolt **(M10) (a)** with nut **(b)** into engine.

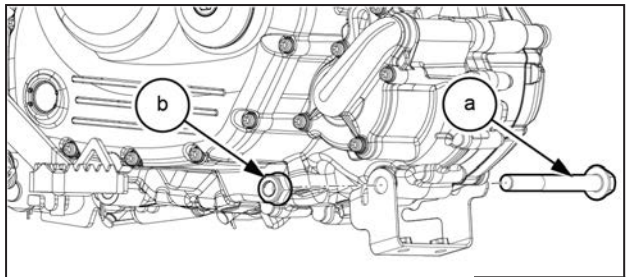

Fig. 6.6.45

	14 mm Socket with Ratchet 17 mm Double end Spanner
Torque	45 Nm / 4.5 kgf-m

- Locate the sump guard insert panel **(a)** into sump guard.

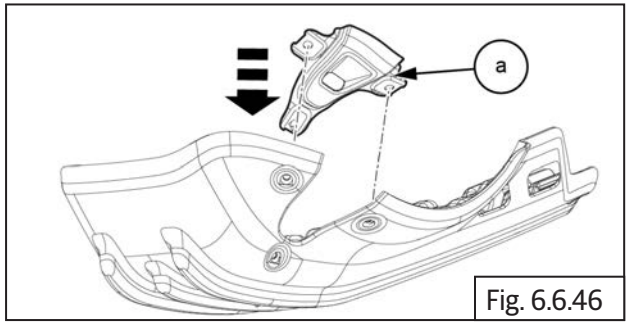

Fig. 6.6.46

- Loosen and remove button head bolts 3 nos **(M6) (a)** from sump guard.

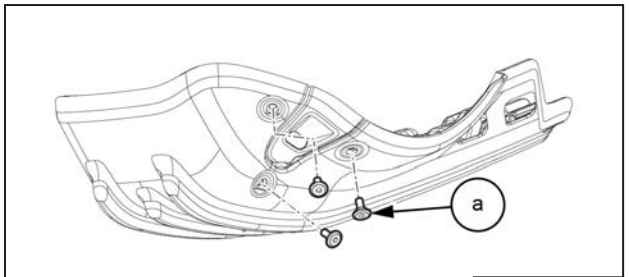

Fig. 6.6.47

	4 mm Allen Socket with Ratchet
Torque	5 Nm / 0.5 kgf-m

- Gently locate the sump guard **(a)** inside into rear bracket.

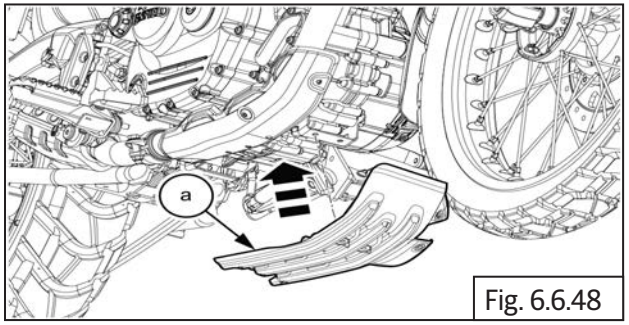

Fig. 6.6.48

- Locate and tighten button head bolts 2 nos **(M6)** **(a)** into sump guard bottom.

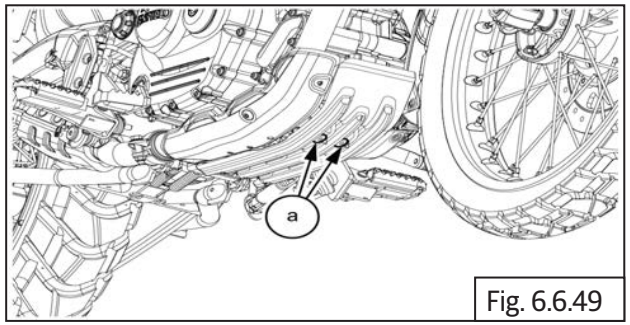

Fig. 6.6.49

	5 mm Allen Socket with Ratchet
Torque	10 Nm / 1.0 kgf-m

6.6.9 Seat latch lock

- Attach the seat key lock set **(a)** to the bottom battery tray.

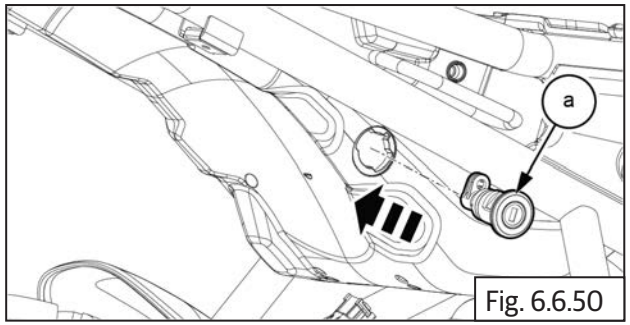

Fig. 6.6.50

- Slide and attach seat lock clip **(a)**.

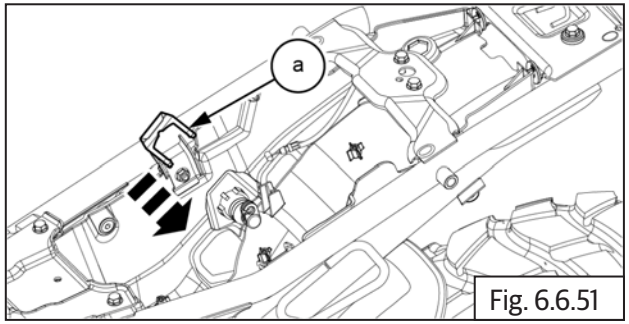

Fig. 6.6.51

- Attach the seat latch lock with cable **(a)**

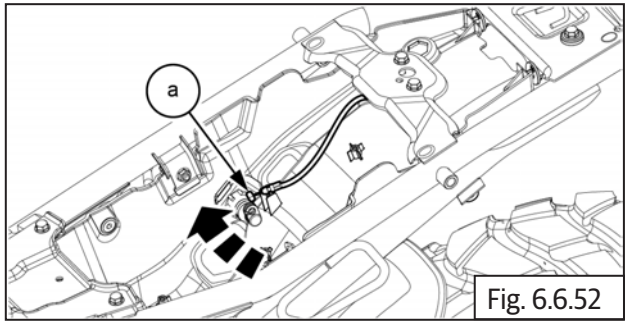

Fig. 6.6.52

- Place and align the cable **(a)** to seat latch.

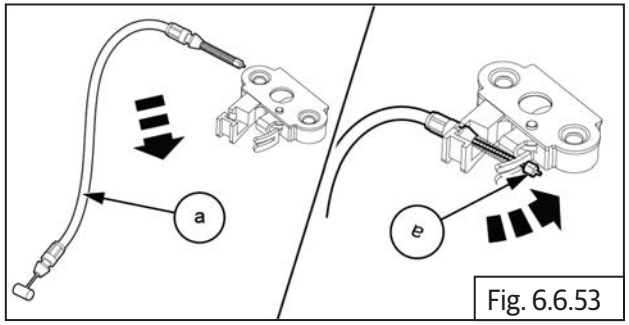

Fig. 6.6.53

- Attach the seat latch lock with cable **(a)**

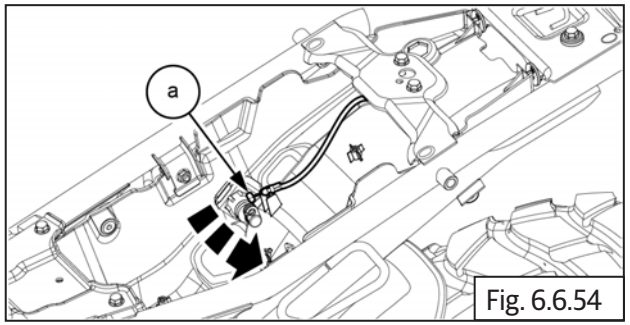

Fig. 6.6.54

- Locate and Tighten the hex head bolts **(a)** with nuts **(b)** 2 nos **(M6)** to seat latch lock.

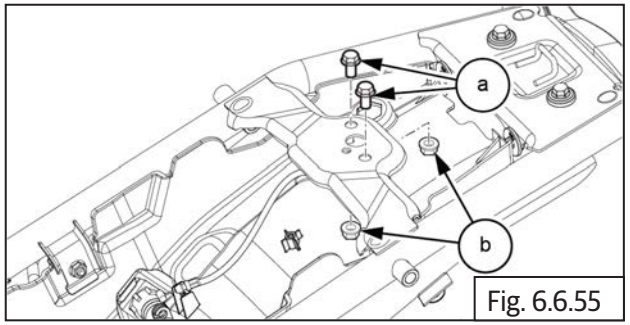

Fig. 6.6.55

	10 mm socket with Ratchet
Torque	10 N-m / 1.0 kgf-m

- Locate and tighten 7Nos screws **(a)** with washers **(b)** on battery tray.

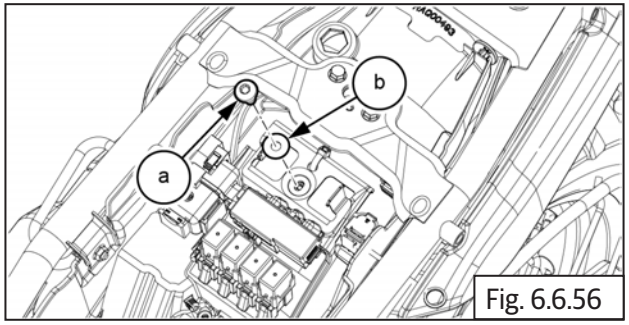

Fig. 6.6.56

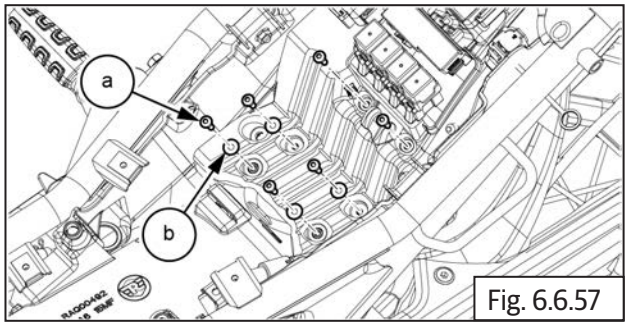

Fig. 6.6.57

	T20 Torx socket with Ratchet
Torque	1.5 N-m / 0.15 kgf-m

6.6.10. Grab Rail

- Locate and tighten 2 Nos hex head bolts **(M6) (a)** with sleeves **(b)** on top number plate hanger.

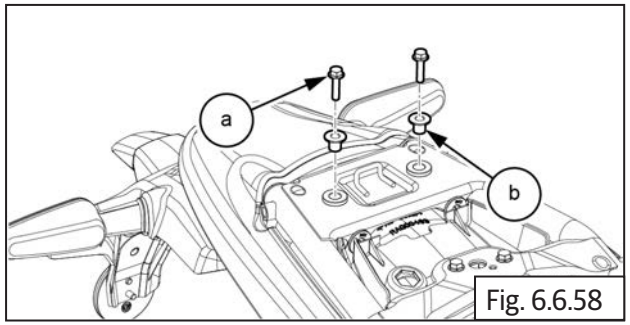

Fig. 6.6.58

	10 mm socket with Ratchet
Torque	10 N-m / 1.0 kgf-m

- Locate and tighten 2 Nos. button head bolts **(M6) (a)** on bottom number plate hanger.

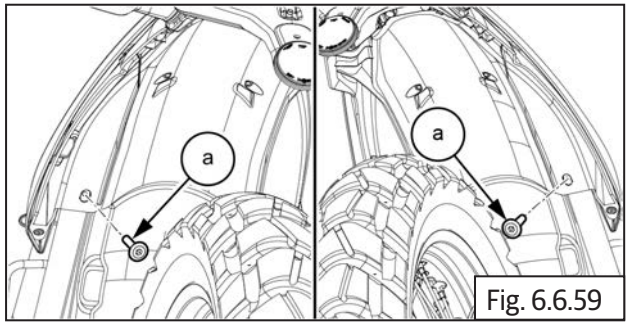

Fig. 6.6.59

	5 mm Allen socket with Ratchet
Torque	10 N-m / 1.0 kgf-m

- Locate grab rail assembly **(a)** into rear sub frame assembly.

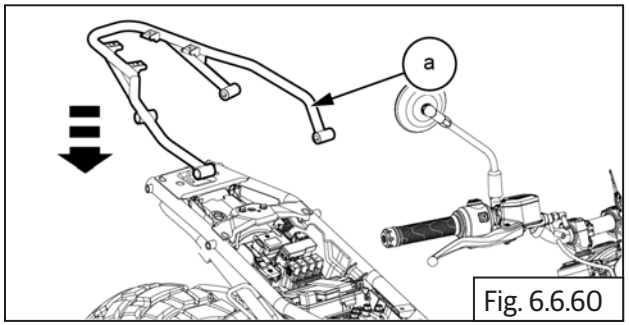

Fig. 6.6.60

- Locate and tighten cap head bolts 2 nos **(M8) (a)** along with washer **(B)** and nut **(C)** into grab rail mounting rear.

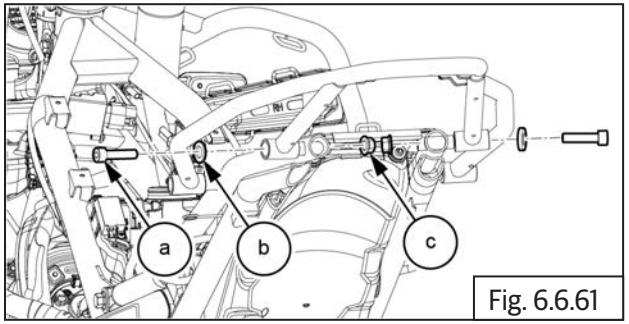

Fig. 6.6.61

	6 mm Allen Socket with Ratchet 10 mm Double end Spanner
Torque	25 Nm / 2.5 kgf-m

- Locate and tighten cap head bolts 2 nos **(M8) (a)** along with washer **(B)** and nut **(C)** into grab rail mounting front.

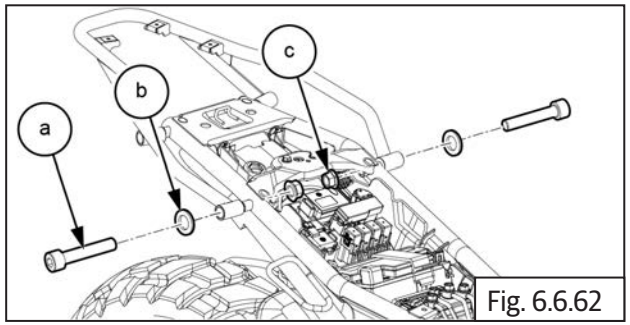

Fig. 6.6.62

	6 mm Allen Socket with Ratchet 10 mm Double end Spanner
Torque	25 Nm / 2.5 kgf-m

- Locate the grab rail top plate **(a)** on grab rail assembly.

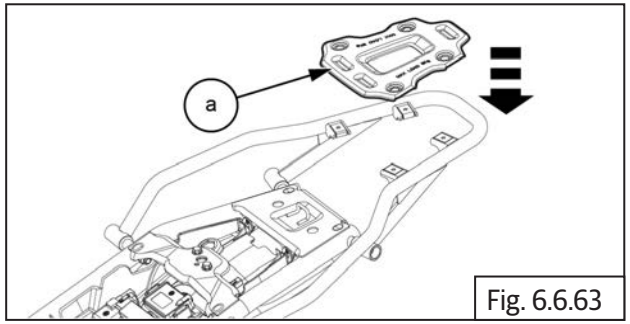

Fig. 6.6.63

- Locate and tighten button head bolts 4 nos **(M6) (a)** into grab rail top plate.

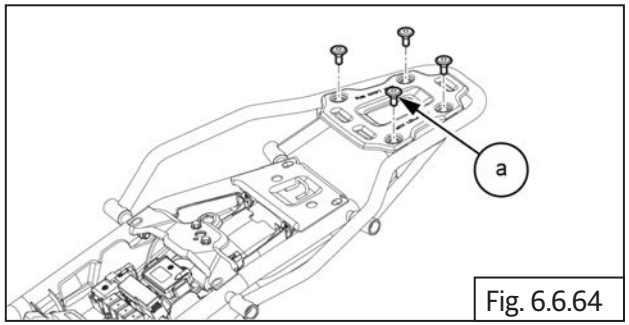

Fig. 6.6.64

	5 mm Allen Socket with Ratchet
Torque	10 Nm / 1.0 kgf-m

6.6.11. Rider Seat

NOTE
• *The rider seat height adjustment option is available in the bottom side of the rider seat.* • *If increase or decrease in the rider seat height just change the front and rear end seat rod slot.*

- Locate the rider seat **(a)**.

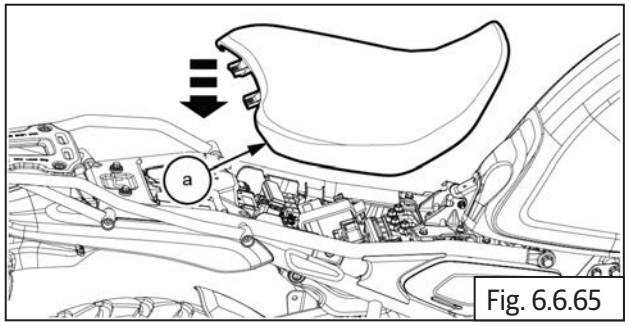

Fig. 6.6.65

- Slide the seat **(a)** towards forward direction and ensure the rider seat aligned with frame.

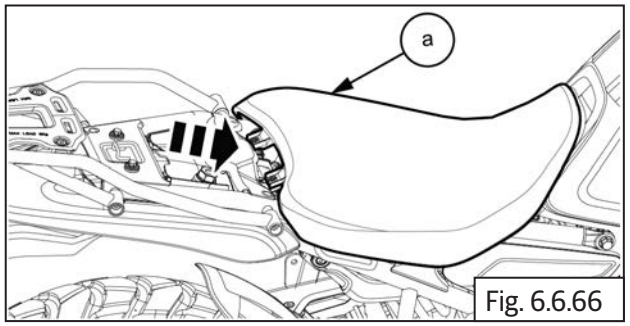

Fig. 6.6.66

6.6.12. Pillion Seat

- Locate the pillion seat **(a)**.

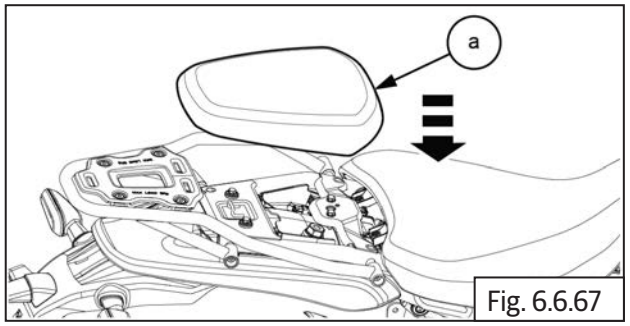

Fig. 6.6.67

- Slide the seat **(a)** towards backward direction.

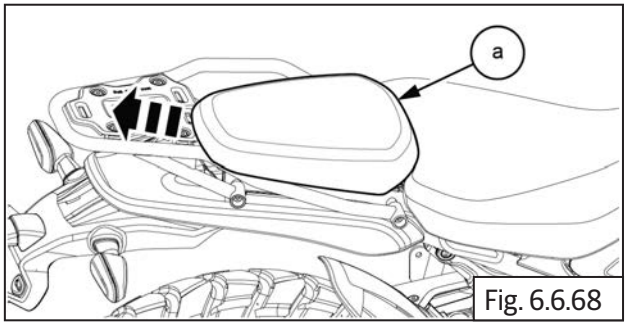

Fig. 6.6.68

- Ensure the pillion seat aligned with frame and press seat to lock with key **(a)** in position.

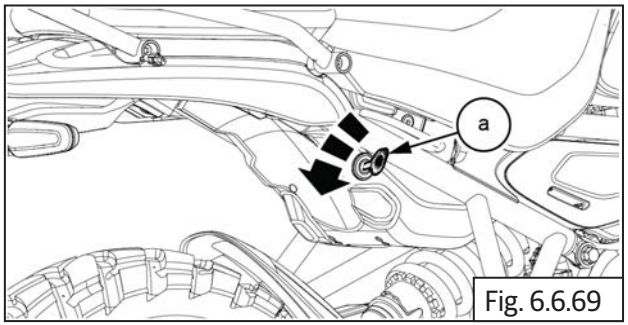

Fig. 6.6.69

6.6.13. Side Panel LH

- Gently Press and fix rubber grommet **(a)** into main frame assembly.

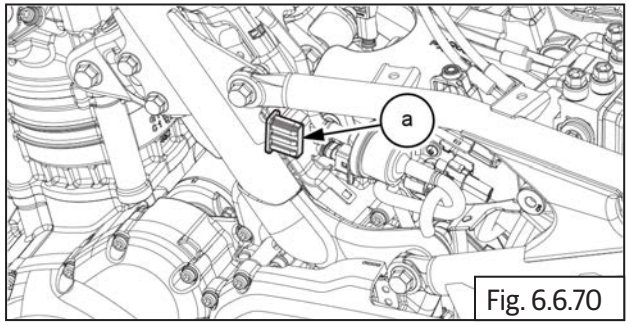

Fig. 6.6.70

- Gently press and fix rubber grommet **(a)** into rear sub frame assembly.

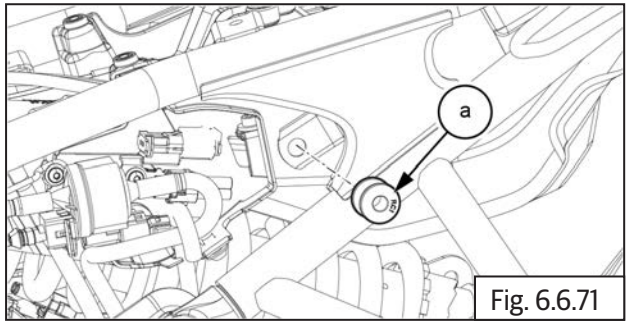

Fig. 6.6.71

- Gently press and fix LH side panel cover **(a)** outside into LH side panel.

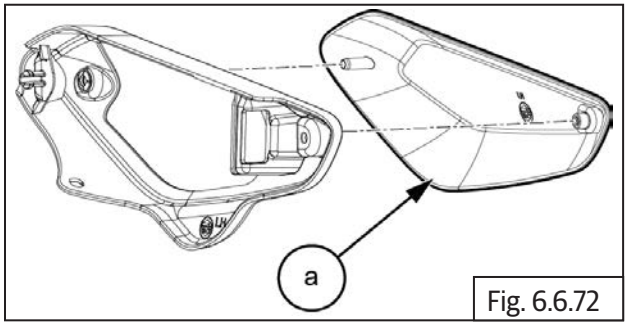

Fig. 6.6.72

- Secure and locate the spring nut **(a)** with "O"ring **(b)** to LH side panel.

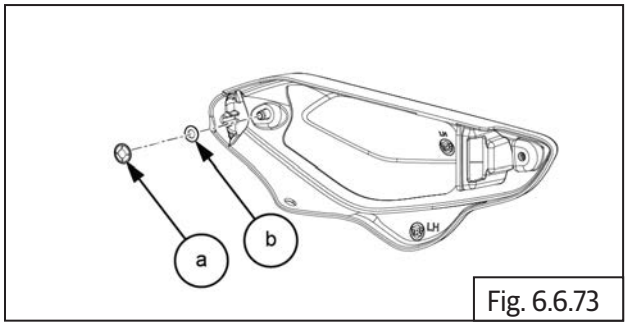

Fig. 6.6.73

	Screw driver Phillips

- Locate and tighten 1 no screw **(M6) (a)** into LH side panel.

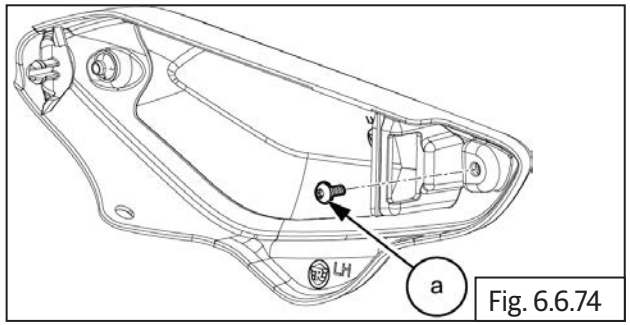

Fig. 6.6.74

	T20 Trox socket with ratchet
Torque	3 Nm / 0.3 kgf-m

- Gently locate the side panel LH **(a)** on rear subframe LH .

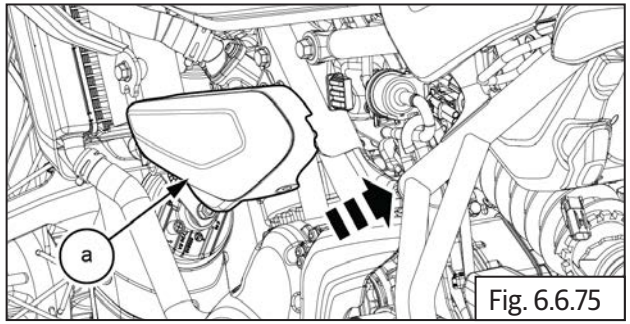

Fig. 6.6.75

- Locate and tighten button head bolt 1 no **(M6) (a)** along with washer **(b)** into LH side panel.

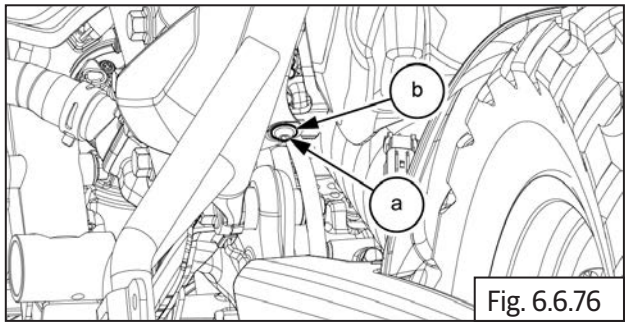

Fig. 6.6.76

	4 mm Allen Socket with Ratchet
Torque	3 Nm / 0.3 kgf-m

6.6.14. Side Panel RH

- Gently Press and fix rubber grommet **(a)** into main frame assembly.

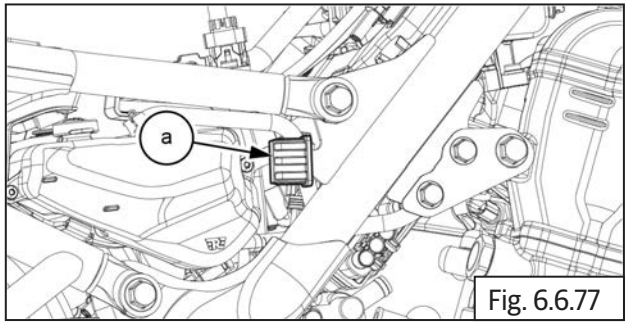

Fig. 6.6.77

- Gently press and fix rubber grommet **(a)** into rear sub frame assembly.

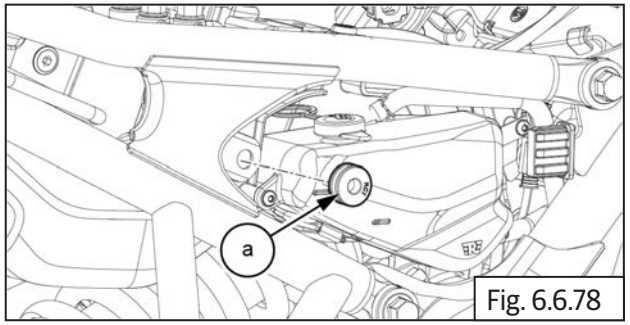

Fig. 6.6.78

- Gently press and fix LH side panel cover **(a)** outside into LH side panel.

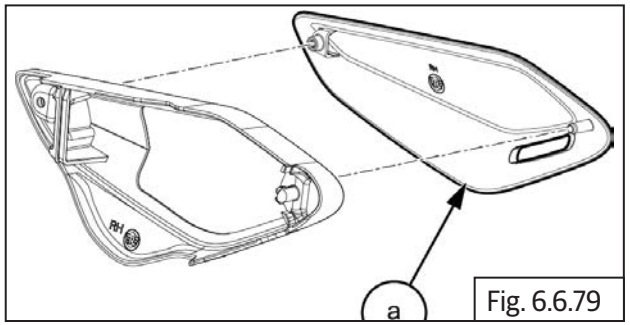

Fig. 6.6.79

- Secure and locate the spring nut **(a)** with "O"ring **(b)** to RH side panel.

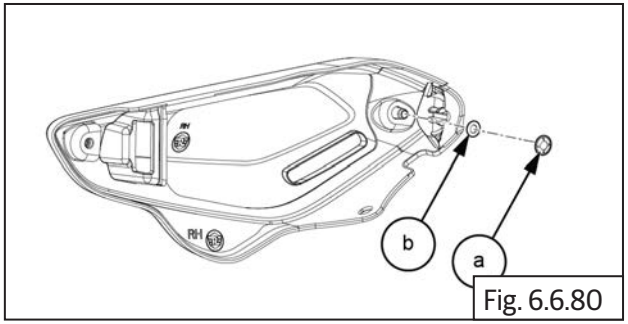

Fig. 6.6.80

	Screw driver Phillips

- Locate and tighten 1 no screw **(M6) (a)** into RH side panel.

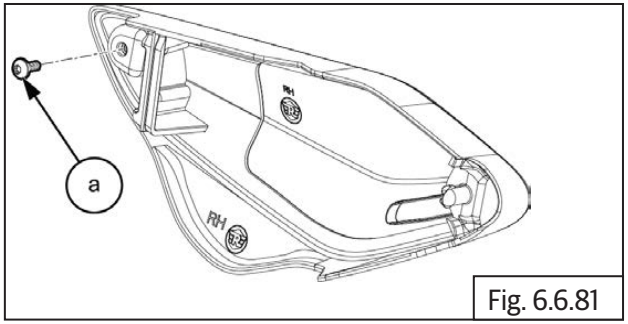

Fig. 6.6.81

	T20 Trox socket with ratchet
Torque	3 Nm / 0.3 kgf-m

- Gently locate the side panel RH **(a)** on rear subframe RH .

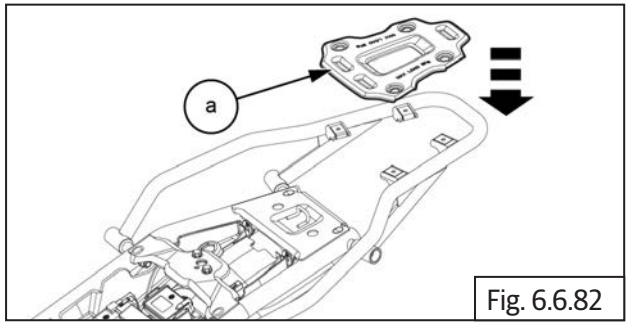

Fig. 6.6.82

- Locate and tighten button head bolt 1 no **(M6) (a)** along with washer **(b)** into RH side panel.

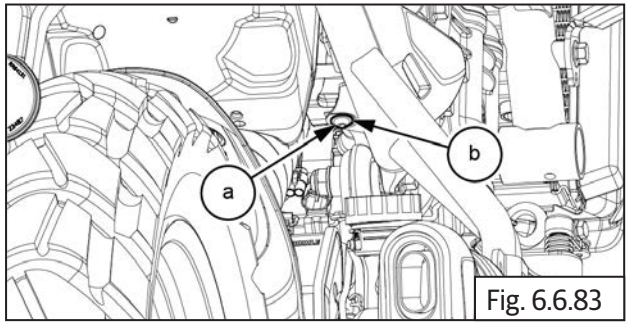

Fig. 6.6.83

	4 mm Allen Socket with Ratchet
Torque	3 Nm / 0.3 kgf-m

WHEELS

CONTENTS **PAGE**

6.7 Wheels 321

Dismantling..... 323

6.7.1 Front Wheel 323

6.7.2. Front Wheel and Brake Disc..... 324

6.7.3 Rear Wheel from Swing Arm..... 325

6.7.4 Rear Wheel and Brake Disc..... 327

Inspection..... 329

6.7.5. Front Wheel and Brake Disc..... 329

6.7.6. Rear Wheel and Brake Disc..... 331

Assembly..... 333

6.7.7 Tyre Assembly On Wheel Rim..... 333

6.7.8 Rear Wheel and Brake Disc..... 334

6.7.9 Rear Wheel into Swing Arm..... 336

6.7.10 Drive Chain Free Play Adjustment..... 337

6.7.11 Tyre Assembly on Wheel Rim..... 339

6.7.12 Front Wheel and Front Brake Disc..... 339

6.7.13 Front Wheel into Front Fork Assembly..... 341

Troubleshooting..... 343

6.7 Wheels

Dismantling

6.7.1. Front Wheel

NOTE
• *Ensure the motorcycle is upright on a firm and flat surface.*

- Locate a scissor jack under the engine and lift motorcycle such that the front wheel is off the ground.

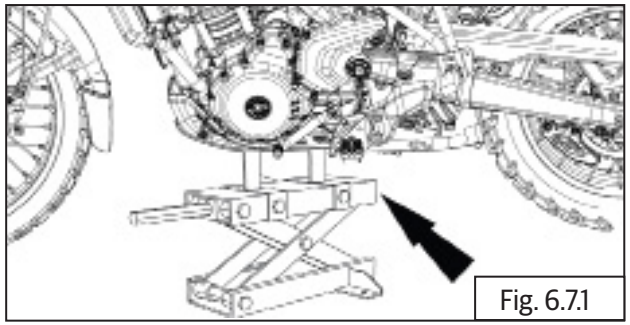

Fig. 6.7.1

- Loosen and remove cap bolts **2 Nos (M8) (a)** from RHS front fork assembly.

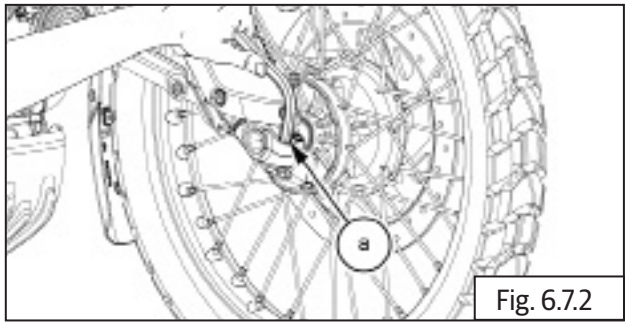

Fig. 6.7.2

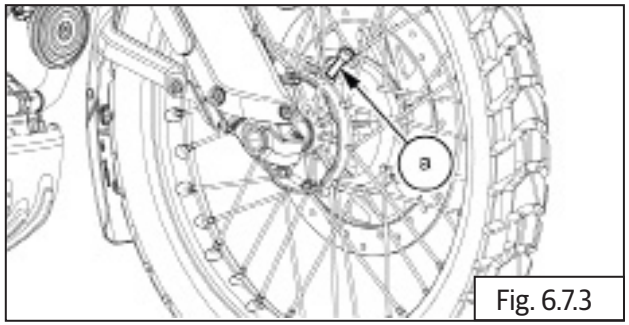

Fig. 6.7.3

	6 mm Allen key

- Loosen and remove spindle bolt **(a)** from RHS front fork assembly.

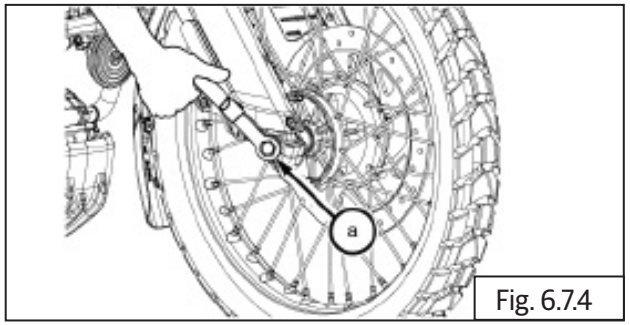

Fig. 6.7.4

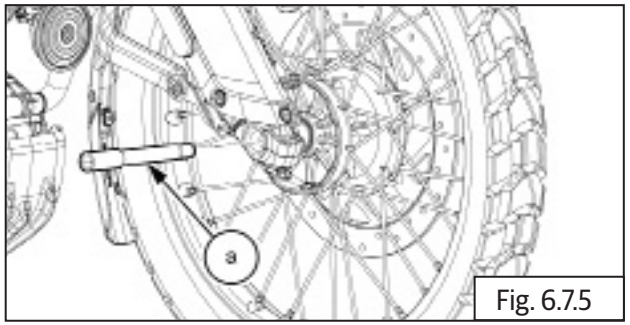

Fig. 6.7.5

	17 mm Allen socket

- Gently lower the wheel **(a)** such that it comes out of the fork legs **(b)**.
- Ensure limiter pad is placed between brake pads in caliper assembly.

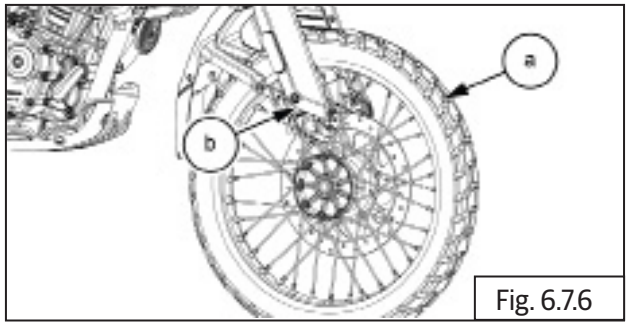

Fig. 6.7.6

- Remove **LHS (a)** and **RHS (b)** spacers from front wheel hub .

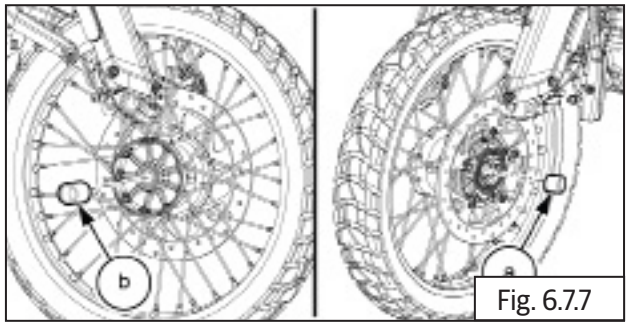

Fig. 6.7.7

6.7.2 Front Wheel and Brake Disc

⚠ WARNING

DO NOT place/store the wheel with disc facing downward. It will damage and cause disc warpage

⚠ CAUTION

Place a soft cloth under the wheel hub center mounting hole area to prevent damage.

- Loosen and remove **5 Nos** button head bolts **(M8)** **(a)** holding disc plate to hub, in crisscross pattern.

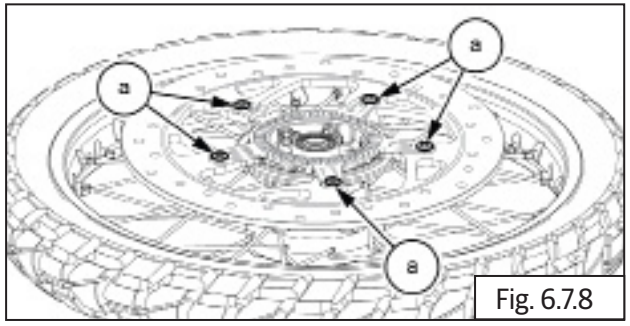

Fig. 6.7.8

	5 mm Allen socket with Ratchet

⚠ CAUTION

Avoid any bends or damages to the toner wheel as it will affect the functioning of ABS.

- Remove toner wheel **(a)** from hub.

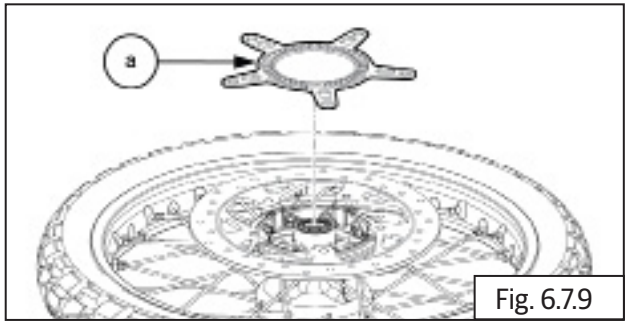

Fig. 6.7.9

- Remove brake disc **(a)** from hub.

⚠ CAUTION

Ensure the brake disc does not get damaged as it will affect the brake efficiency.

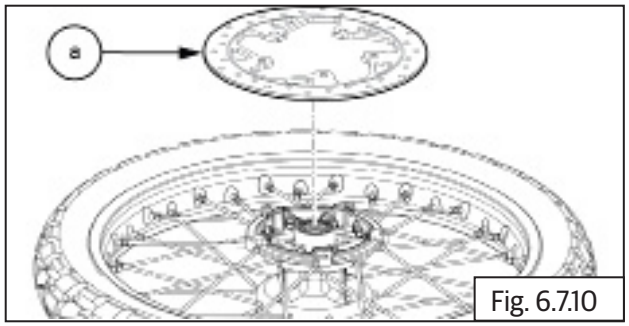

Fig. 6.7.10

- Remove grease seals **(a)** from LHS and RHS hub.

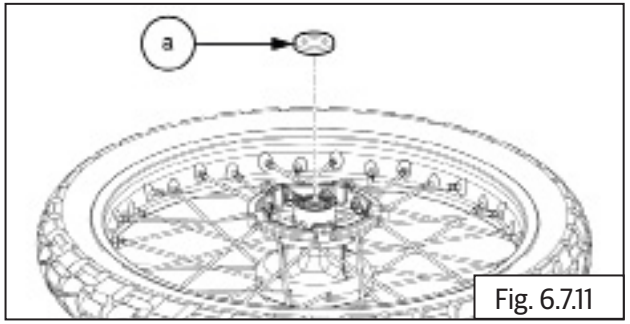

Fig. 6.7.11

	Screw driver

- Locate a suitable pointed punch on hole in spacer from RH of hub to remove bearing LH **(a)**.

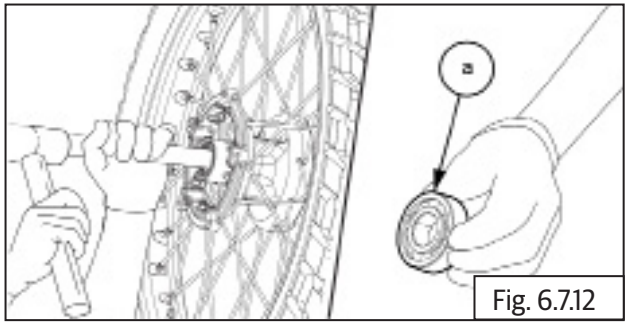

Fig. 6.7.12

	Bearing removal tool and Mallet

- Insert a punch into hub from LH side and drive out bearing RH **(a)**.

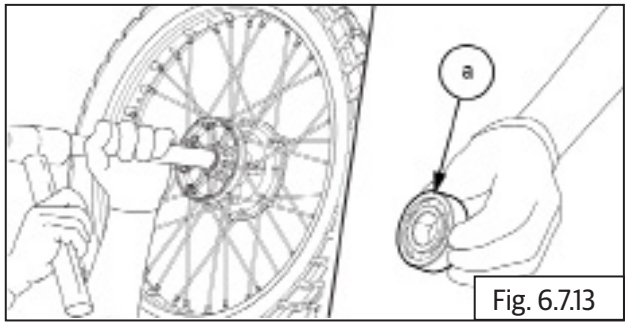

Fig. 6.7.13

	Punch and Mallet

- Remove the internal spacer **(a)**.

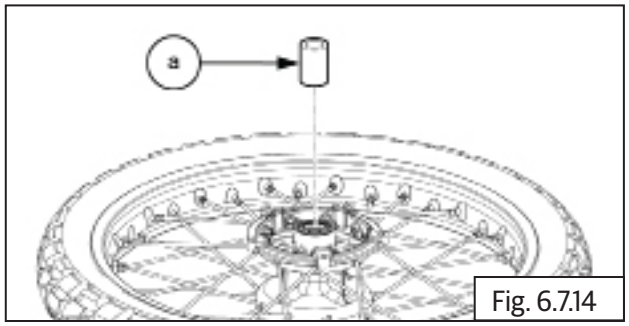

Fig. 6.7.14

6.7.3. Rear Wheel from Swing Arm

NOTE
• *Ensure the motorcycle is upright on a firm and flat surface.*

- Locate a scissor jack under the cradle frame and lift motorcycle such that the front wheel is off the ground.

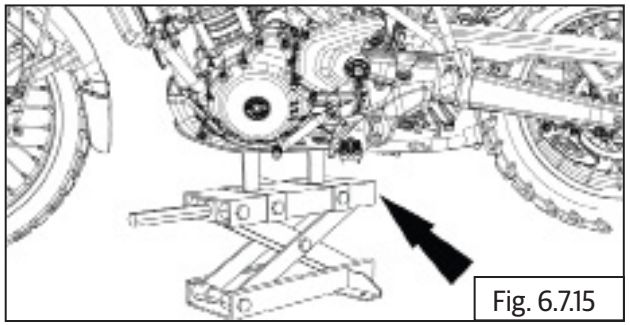
Fig. 6.7.15

- Loosen and remove nut **(M16) (b)** from RH and hold other side LH spindle **(a)** with tommy bar.

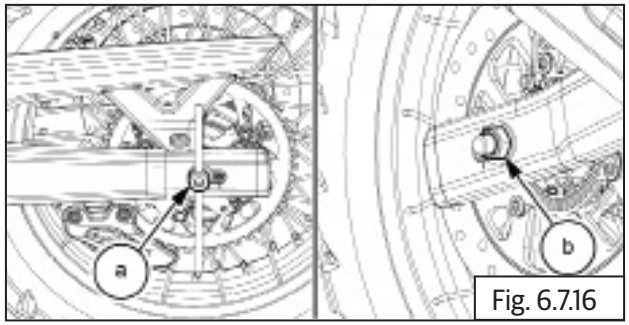

Fig. 6.7.16

	24 mm Ring spanner and Tommy bar

- Remove washer **(a)** from spindle on swing arm RH.

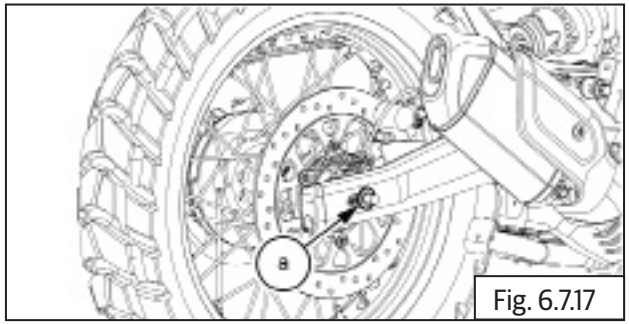

Fig. 6.7.17

- Loosen the adjuster cap bolts **(M8) (a)** and **(b)** on both LH and RH swing arm.

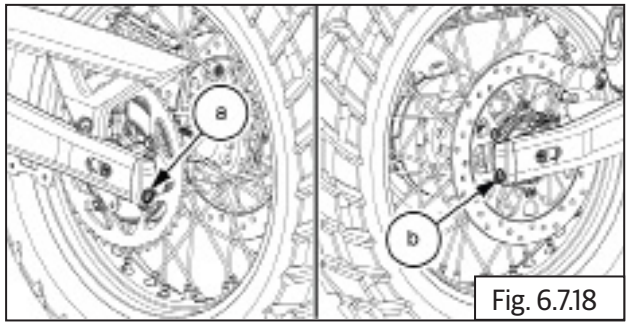

Fig. 6.7.18

	6 mm Allen Key

- Gently tap spindle **(a)** from RH to pull out from LHS.
- Remove spindle **(a)** from swing arm LH along with washer **(b)**.

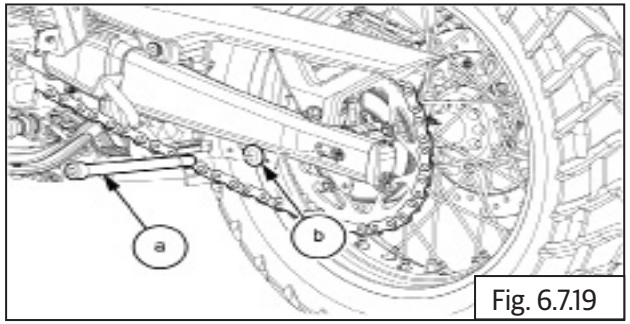

Fig. 6.7.19

	Mallet & Tommy bar

- Push rear wheel forward to increase chain slack on rear sprocket.

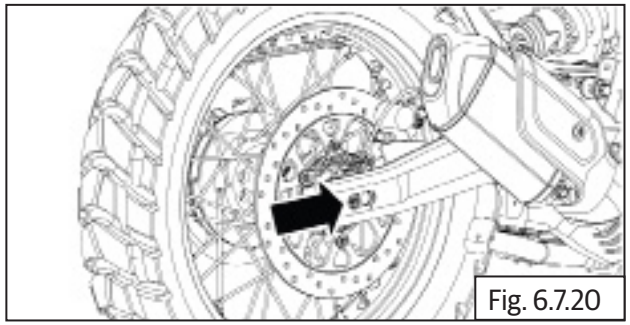
Fig. 6.7.20

- Remove chain adjuster assembly **(a)** cap **(b)**with cap bolt **(c)** from swing arm RHS .
- Proceed the same step to LHS side.

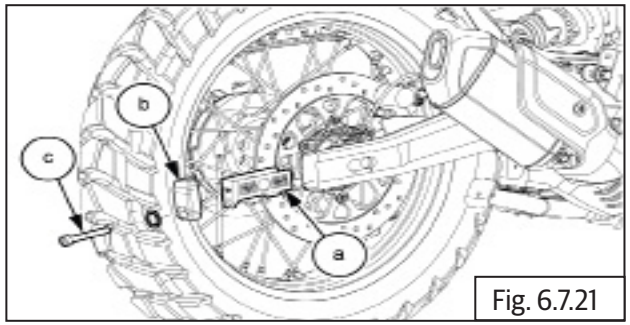

Fig. 6.7.21

- Gently release drive chain **(a)** from sprocket **(b)**.

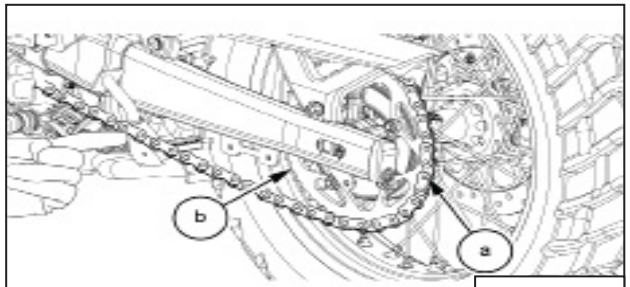

Fig. 6.7.22

- Gently remove rear wheel **(a)** from swing arm.
- Ensure limiter pad is placed between brake pads in caliper assembly.

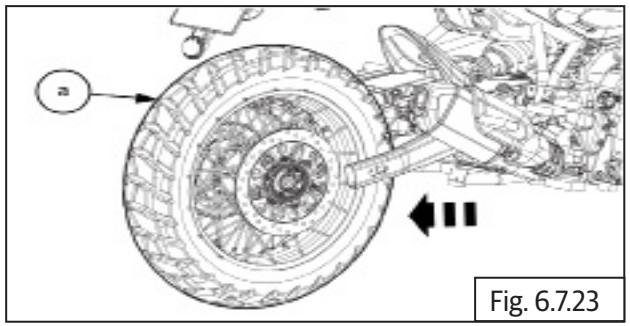

Fig. 6.7.23

- Gently remove spacer LHS **(a)** and RHS **(b)** from the rear wheel hub.

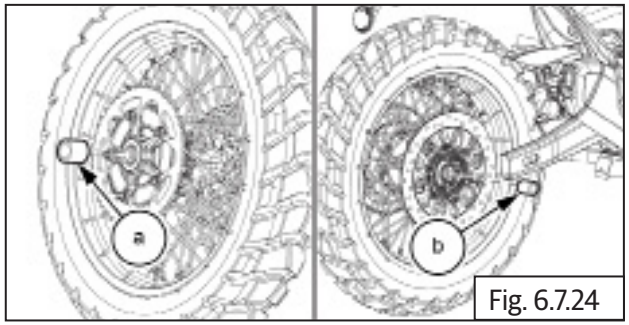

Fig. 6.7.24

6.7.4. Rear Wheel and Brake Disc

- Loosen and remove 6 Nos **(M8) (a)** bolts to remove ABS toner wheel.

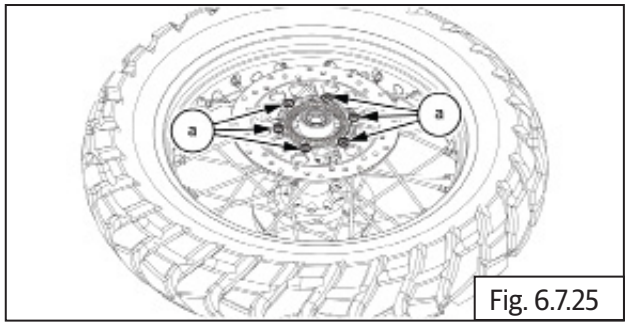

Fig. 6.7.25

	6 mm Allen socket with Ratchet

- Remove ABS toner wheel **(a)** from rear wheel hub RH.

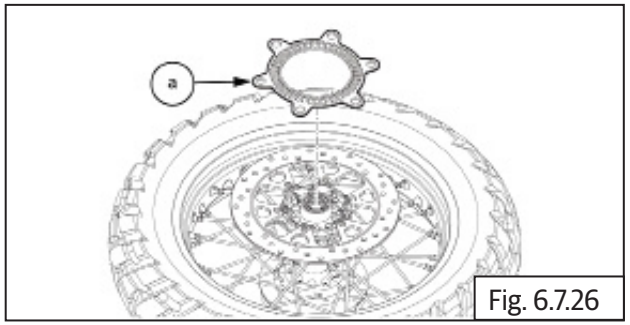

Fig. 6.7.26

- Remove rear brake disc **(a)** from the rear wheel hub RH.

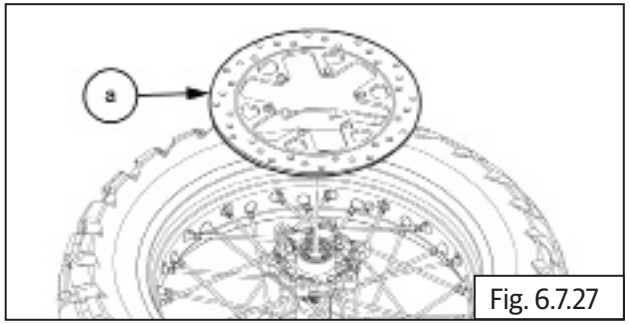

Fig. 6.7.27

- Remove grease seal **(a)** from RHS hub.

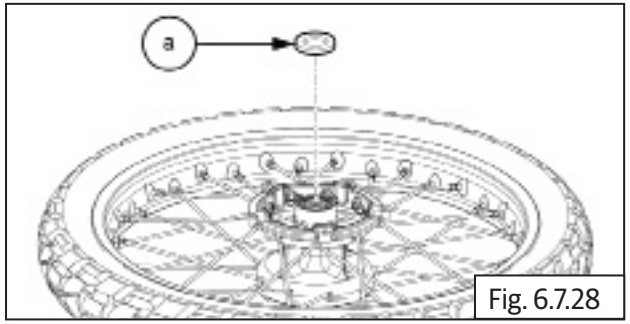

Fig. 6.7.28

	Screw driver

- Loosen and remove 5 Nos **(M10) (a)** Hex flanged nut to remove chain sprocket .

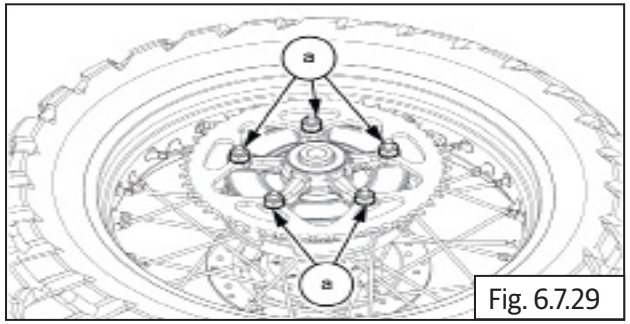

Fig. 6.7.29

	17 mm Socket with Ratchet

- Remove chain drive sprocket **(a)** from sprocket carrier **(b)**.

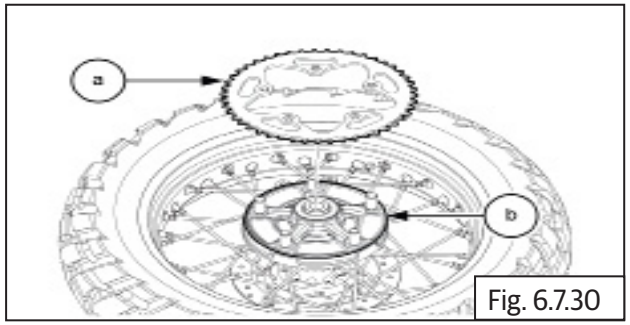

Fig. 6.7.30

- Remove sprocket carrier **(a)** from the rear wheel hub .

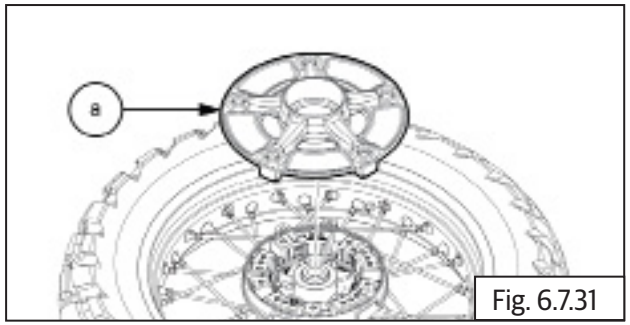

Fig. 6.7.31

- Remove cush rubber **(a)** from rear wheel hub LH.

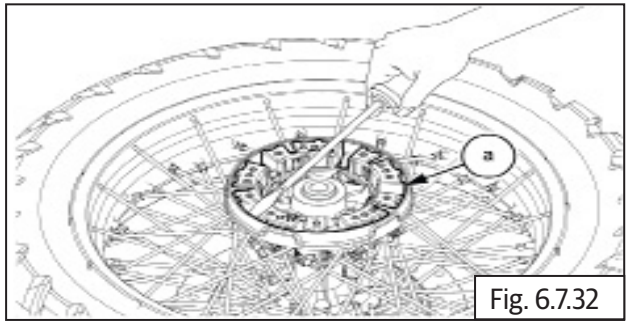

Fig. 6.7.32

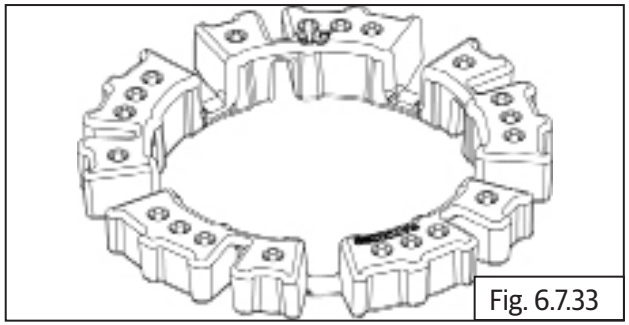
Fig. 6.7.33

	Connector

- Gently tap to remove cush spacer **(a)** from sprocket carrier **(b)**.

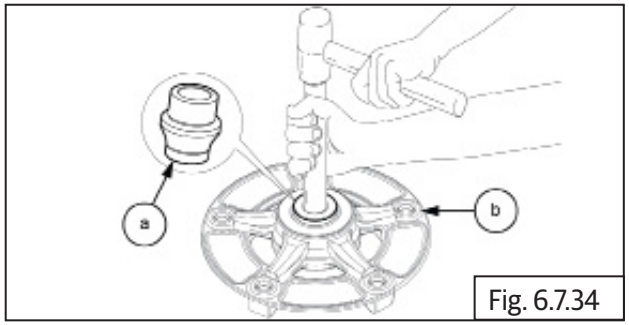

Fig. 6.7.34

	Punch and Mallet

⚠ CAUTION

DO NOT apply excessive force to remove the bearing, spacer as it may cause damage.

- Gently remove grease seal **(a)** from the sprocket carrier **(b)**.

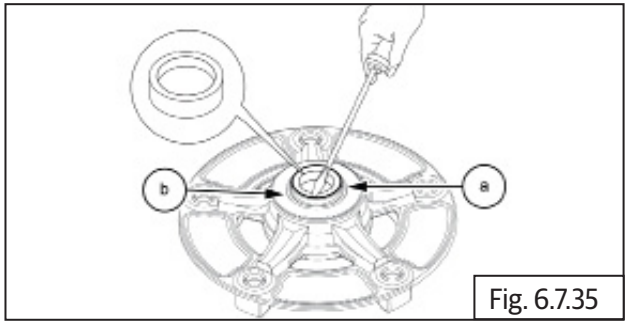

Fig. 6.7.35

	Connector

- Gently remove bearing **(a)** from the sprocket carrier **(b)**.

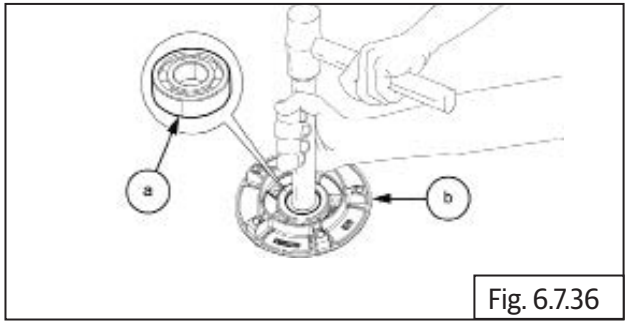

Fig. 6.7.36

	Bearing removal tool and Mallet

- Insert a punch into hub from LH side and drive out bearing RH **(a)**.

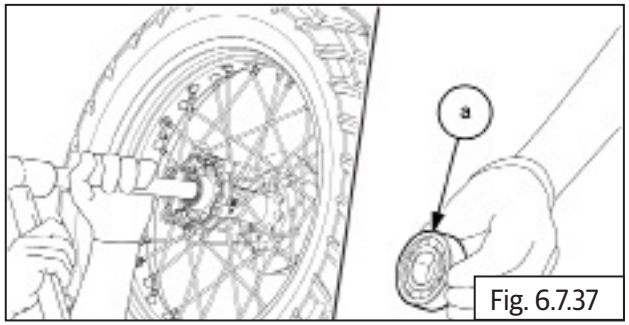

Fig. 6.7.37

	Punch and Mallet

- Remove internal spacer **(a)** from the rear wheel hub.

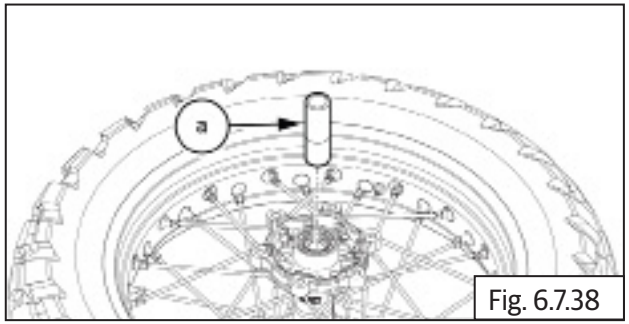

Fig. 6.7.38

- Locate a suitable pointed punch on hole in spacer from RH of hub to remove bearing RH **(a)**.

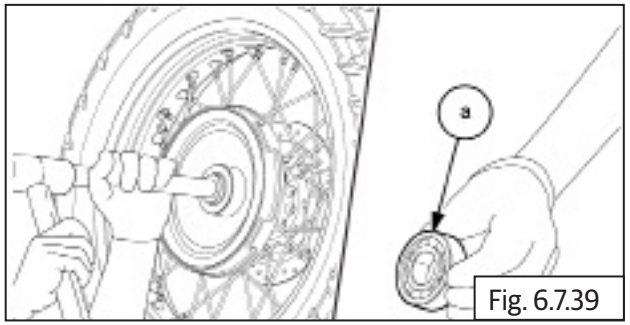

Fig. 6.7.39

	Punch and Mallet

Inspection

6.7.5. Front Wheel and Brake Disc

- Remove the tyre from wheel rim.
- Inspect tyre condition and wheel rim for any damages or bends and replace if out of specifications.

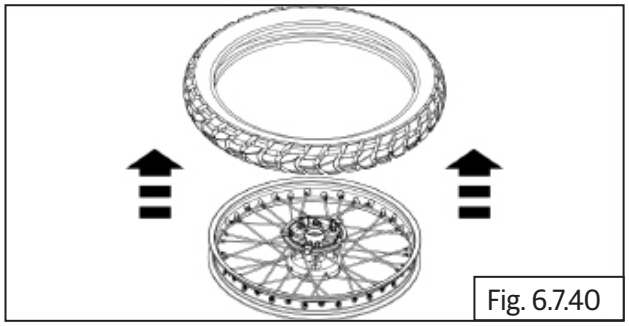

Fig. 6.7.40

- Inspect and replace spindle if it has excess wear, rust or bends.

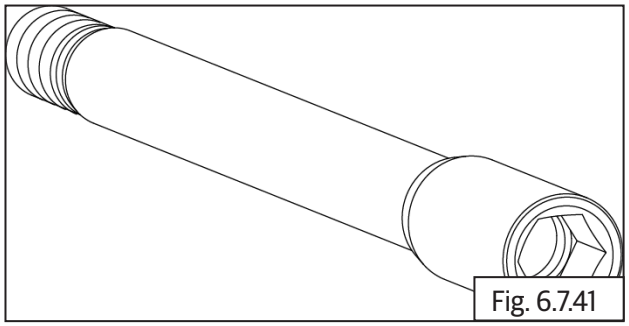

Fig. 6.7.41

- Check tyres for any uneven wear out and the spies on the center of the tyre is above the TWI index.

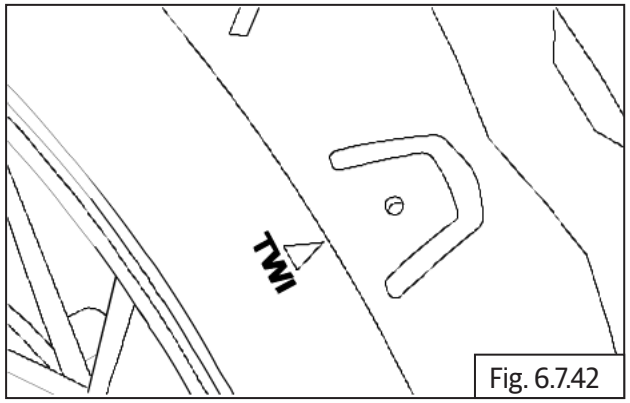

Fig. 6.7.42

	Tyre depth gauge

- Check noise and play on bearing LH and RH.

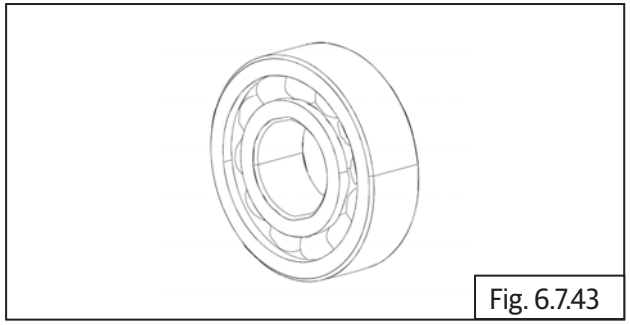

Fig. 6.7.43

- Check and replace wheel spacer if it has excess wear-out.

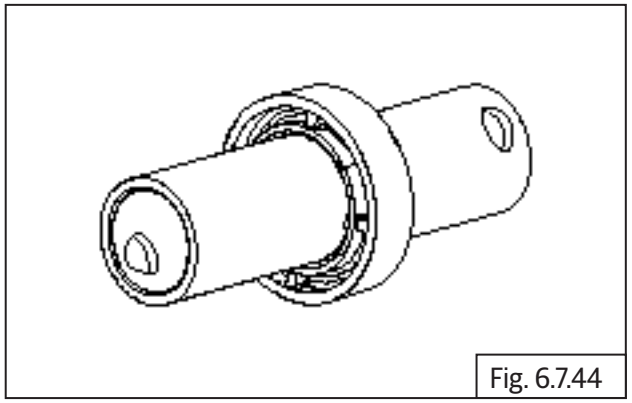

Fig. 6.7.44

- Check if wheel hub assembly is cracked or damaged and replace.
- Check and replace wheel hub bearing seated portion if there is any scoring.

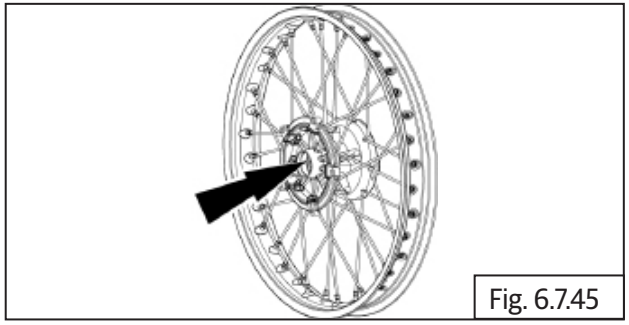

Fig. 6.7.45

- Inspect wheel rim run out / face out and replace if out of specifications.

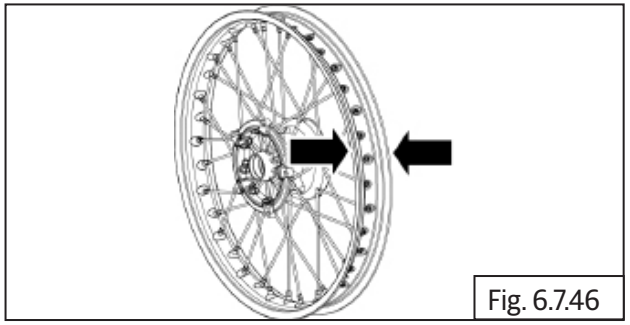

Fig. 6.7.46

Service limit	1 mm

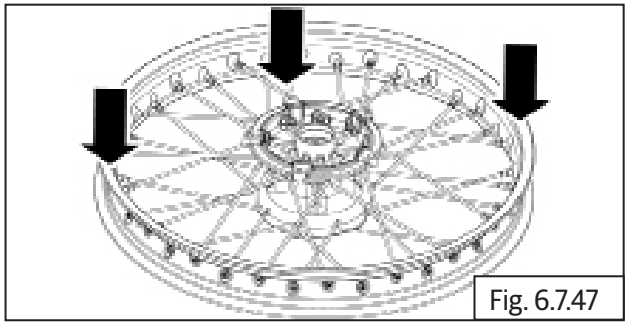

Fig. 6.7.47

- Inspect for rust, deep scoring, any foreign materials, burn marks crack in the mounting location of brake disc.
- Inspect brake disc thickness and run-out. Measure depth at points where scoring is found on the discs and replace if there is excess wear.
- Also measure thickness at the points indicated in the illustration and replace disc if out of specifications.

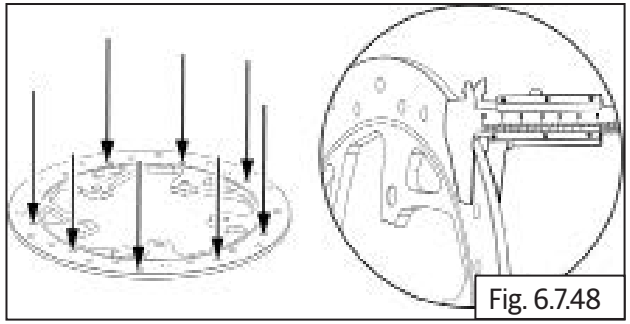

Fig. 6.7.48

	Vernier caliper

Service limit	5.4 mm

- Place brake disc rotor on a flat surface and inspect war page. Replace if it is out of specifications.

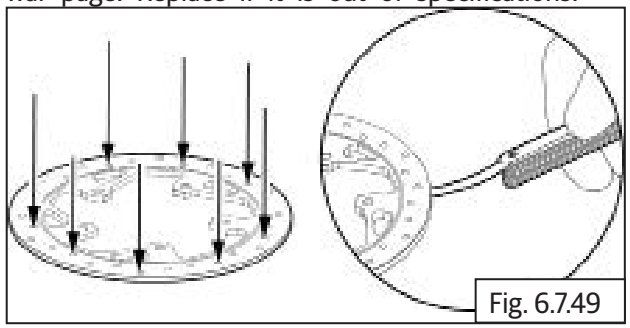

Fig. 6.7.49

	Feeler gauge

Standard	0.00 mm
Service limit	0.3 mm

- Inspect and replace toner wheel plate if there are any damages or bends.

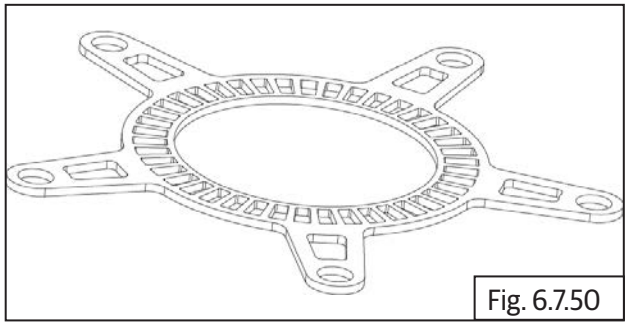

Fig. 6.7.50

- After assembly of brake disc **(a)** into front wheel, insert spindle into rim, fix on wheel balance frame **(c)** and rotate rim to check the disc run-out with dial gauge **(b)**. Ensure run-out is within specified service limits.

- Similarly check run out of front and rear wheel.

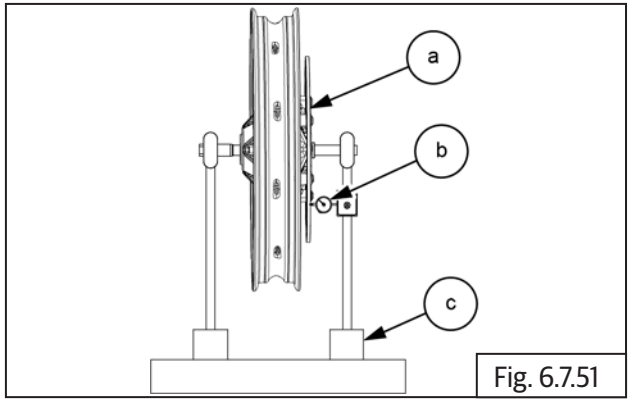

Fig. 6.7.51

Service limit	0.3 mm

NOTE
Run-out of brake disc should be checked only when brake disc is assembled on wheel hub.

6.7.6 Rear Wheel and Brake Disc

- Remove the tyre from wheel rim.

- Inspect tyre condition and wheel rim for any damages or bends and replace if out of specification.

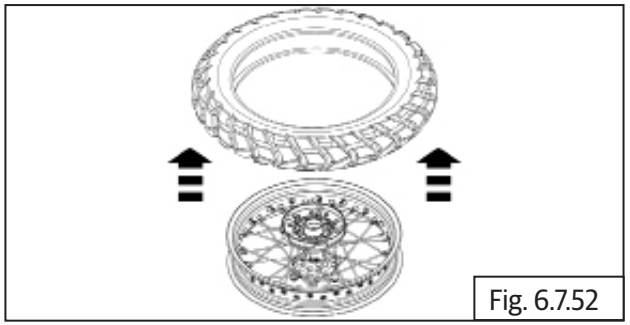
Fig. 6.7.52

- Inspect and replace spindle (a) if it has excess wear, rust or bends.

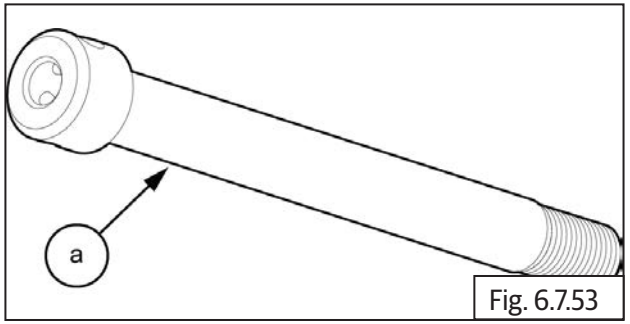

Fig. 6.7.53

- Check noise and play on bearing LH and RH. Replace if necessary.

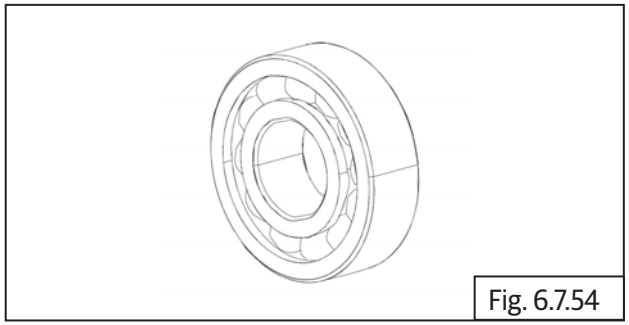
Fig. 6.7.54

- Check and replace spacer if it has excess wear-out.

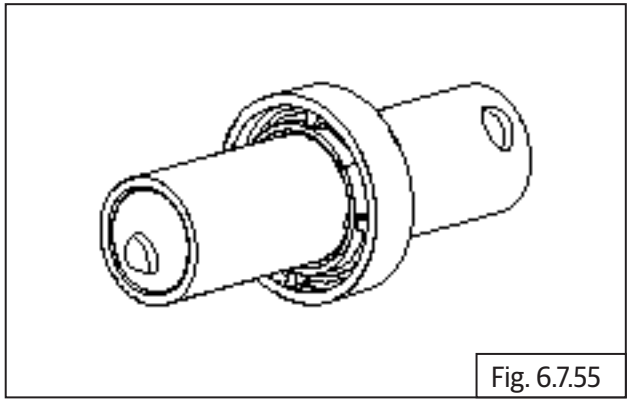
Fig. 6.7.55

- Inspect ABS toner wheel for any bends or damages.
- Place ABS toner wheel on a flat surface and check war page. Replace if out of specifications.

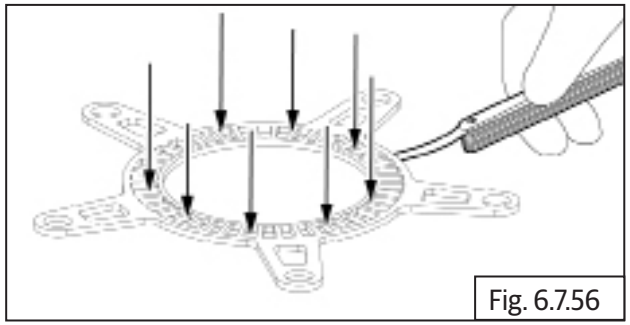

Fig. 6.7.56

	Feeler gauge

Standard	0.00 mm
Service limit	0.3 mm

- Inspect for rust, deep scoring, any foreign materials, burn marks crack in the mounting location of brake disc.
- Inspect brake disc thickness and run-out. Measure depth at points where scoring is found on the discs and replace if there is excess wear.
- Also measure thickness at the points indicated in the illustration and replace disc if out of specifications.

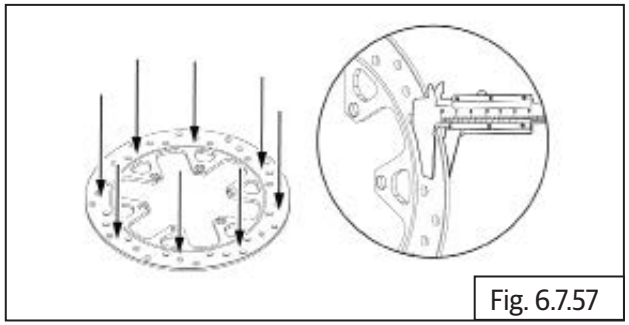

Fig. 6.7.57

	Vernier caliper

Service limit	4.5 mm MIN

- Place brake disc rear on a flat surface and check war page. Replace if out of specifications.

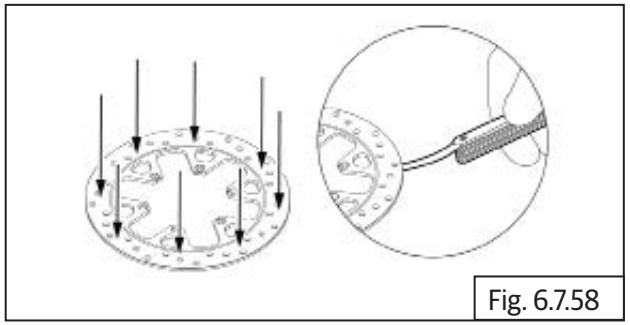

Fig. 6.7.58

	Feeler gauge

Standard	0.00 mm
Service limit	0.05 mm

- Inspect wheel hub assembly for any cracks or damages. Replace if out of specifications.
- Inspect if hub bearing seating portion has scoring. Replace if out of specifications.

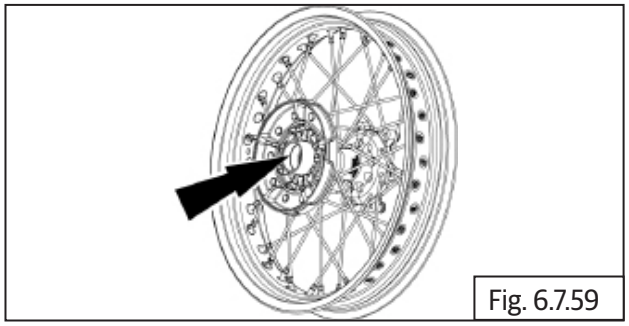

Fig. 6.7.59

- Check rear wheel hub cushion rubbers for any wear-out or damages.

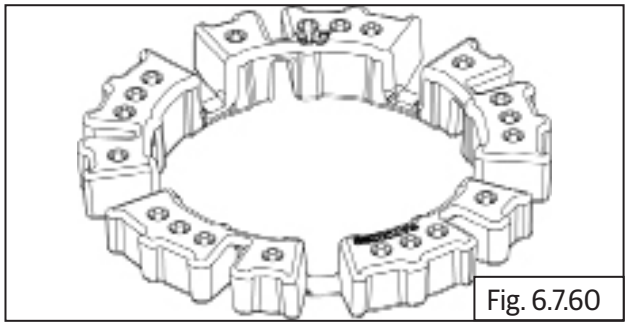

Fig. 6.7.60

- Check tyres for any uneven wear out and the sipes on the center of the tyre is above the TWI index.

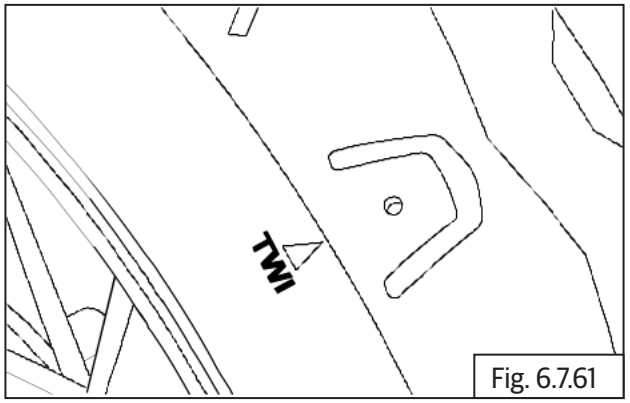

Fig. 6.7.61

	Tyre depth gauge

Assembly

6.7.7. Tyre Assembly On Wheel Disc

- Ensure the tyre is assembled on the wheel rim with the arrow on the tyre side wall is facing towards the front.
- Inflate tyre to the recommended pressure and ensure the tyre is evenly seated in the rim on both LH and RH sides.

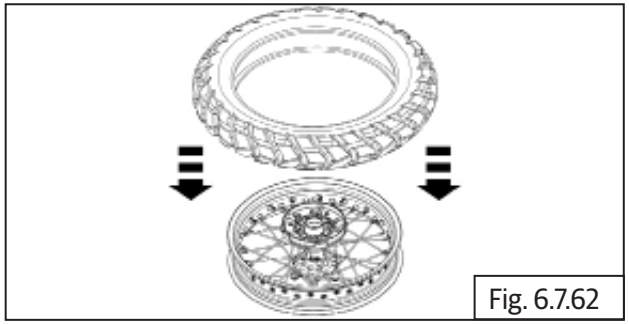

Fig. 6.7.62

6.7.8. Rear Wheel and Brake Disc

- Locate bearing LH **(a)** into rear wheel hub LH. Gently tap on the bearing and ensure it is seated properly on the hub.

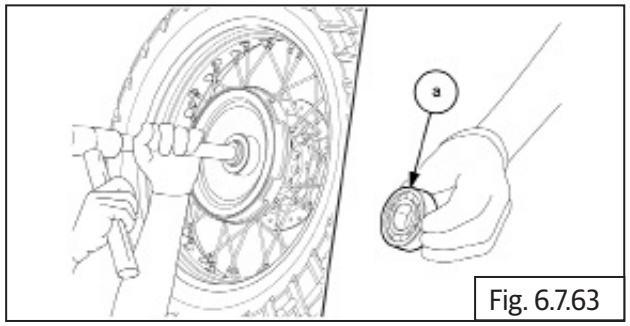

Fig. 6.7.63

	Punch and Mallet

- Assemble spacer **(a)** into rear wheel hub RH. Ensure it is properly seated on the bearing surface.

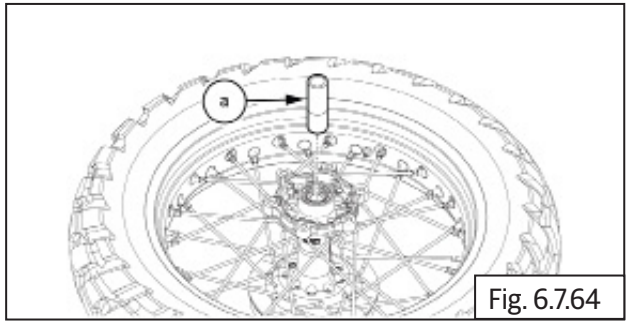

Fig. 6.7.64

- Locate bearing RH **(a)** into rear wheel hub RH. Gently tap on the bearing and ensure it is seated properly on the hub.

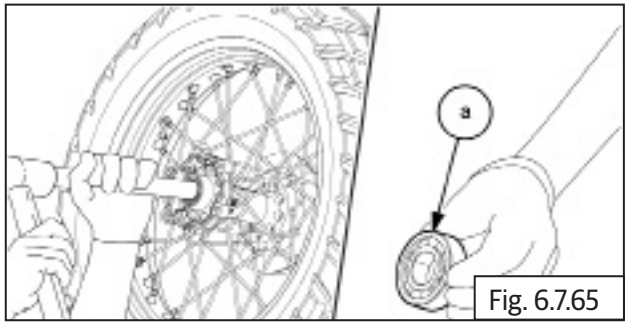

Fig. 6.7.65

	Punch and Mallet

- Assemble rear brake disc **(a)** into rear wheel hub RH .

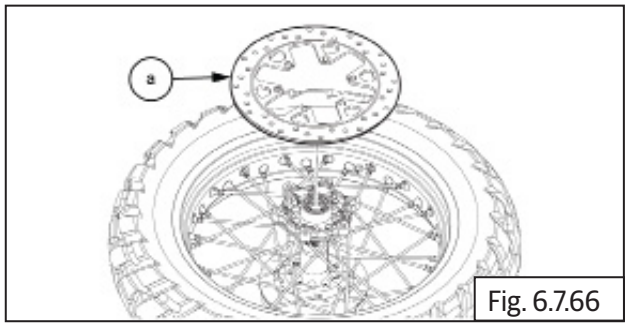

Fig. 6.7.66

- Assemble ABS toner wheel **(a)** into rear brake disc on rear wheel hub RH.

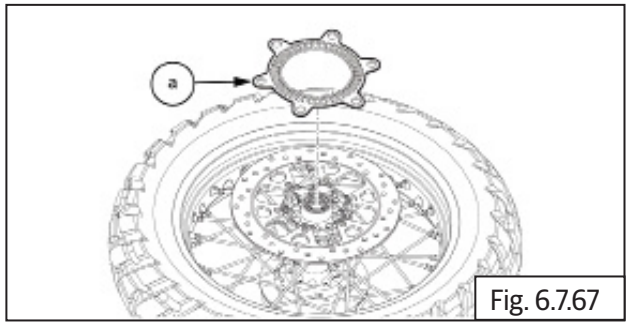

Fig. 6.7.67

- Use recommended sealant on the bolts and locate and tighten **6 Nos (M8) (a)** bolts into rear wheel disc hub RH.

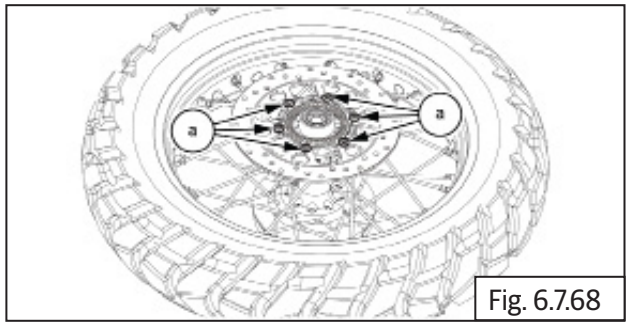

Fig. 6.7.68

	6 mm Allen socket with Ratchet
Torque	25 N-m/2.5 kgf-m

- Clean cush rubber seating area and insert cush rubber **(a)** into rear wheel hub LH and gently tap with mallet .

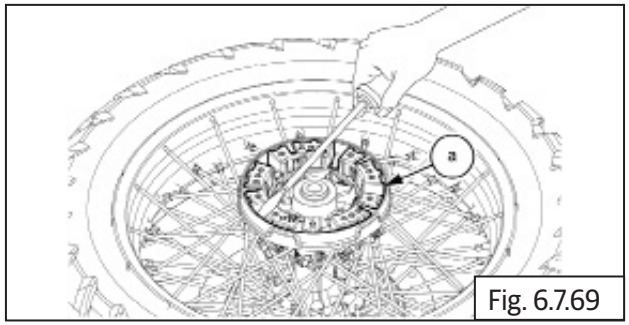

Fig. 6.7.69

	Mallet

- Locate bearing **(a)** into sprocket carrier **(b)**. Ensure it is properly seated on the slot.

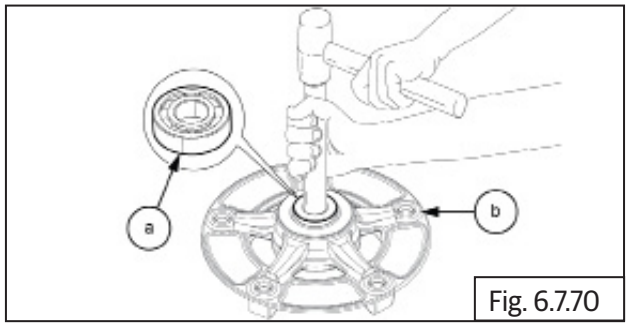

Fig. 6.7.70

- Apply grease as required on seal to inner and outer diameter surface.
- Assemble grease seal **(a)** into sprocket carrier **(b)**.

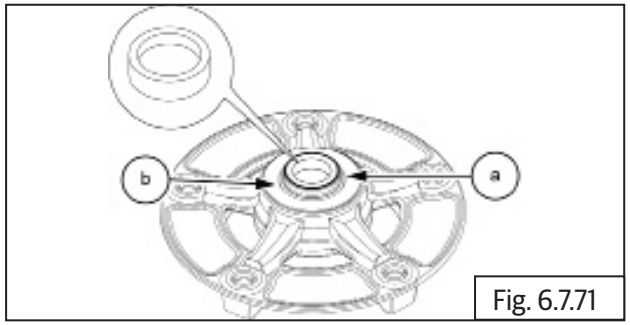

Fig. 6.7.71

	NLGI 2 / Mobil XHP 222

	Seal installer

- Locate and gently tap the cush spacer **(a)** into sprocket carrier **(b)**.

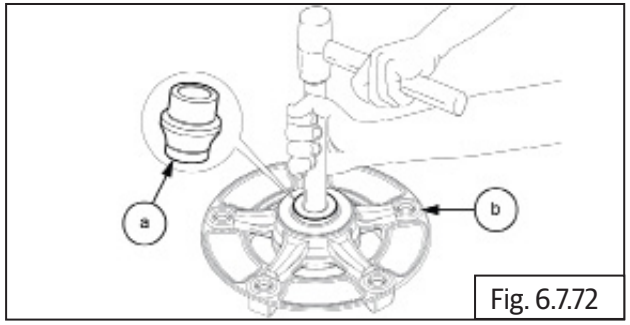

Fig. 6.7.72

	Mallet

- Assemble rear sprocket carrier **(a)** over cushion rubbers into rear wheel hub LH .

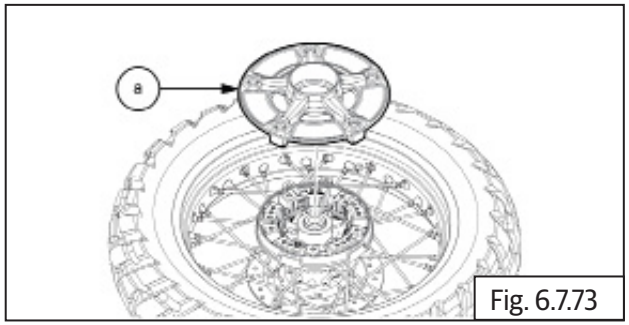

Fig. 6.7.73

- Locate chain drive sprocket **(a)** into sprocket carrier **(b)** on rear wheel hub LH.

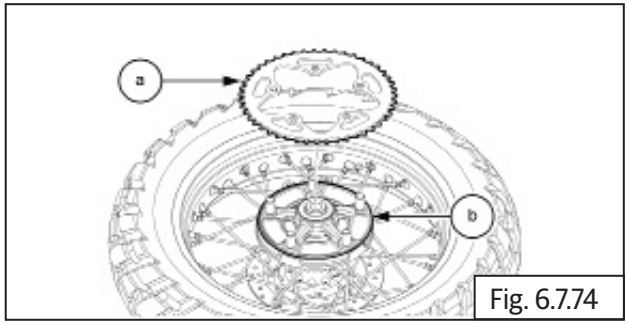

Fig. 6.7.74

- Locate and tighten **5 Nos (M10) (a)** Hex flanged nut into carrier on rear wheel hub LH.

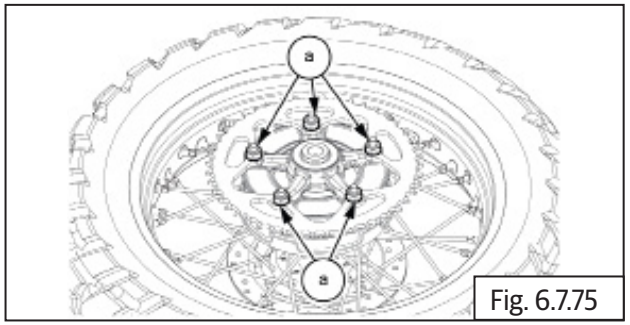

Fig. 6.7.75

	17 mm Socket with Ratchet
Torque	45 N-m / 4.5kgf-m

6.7.9. Rear Wheel into Swing Arm

- Place the flanged side of the spacers **(a)** towards the both side of the grease seal.

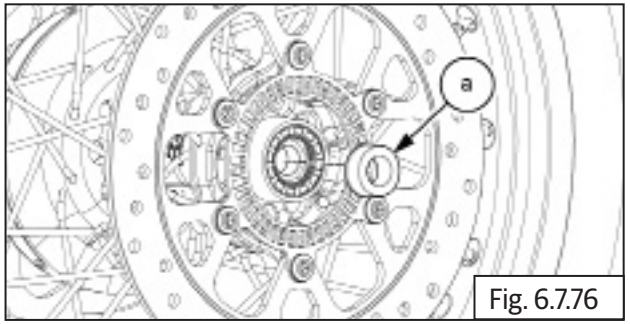

Fig. 6.7.76

- Insert spacers into rear wheel hub RHS **(b)** and LHS **(a)**.

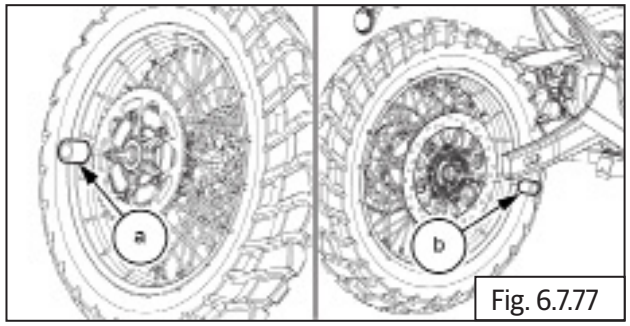

Fig. 6.7.77

- Gently locate rear wheel **(a)** into swing arm .

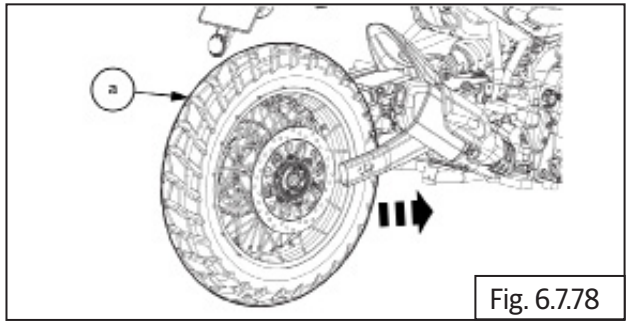

Fig. 6.7.78

- Locate drive chain **(a)** onto sprocket **(b)** and align wheel into swing arm.

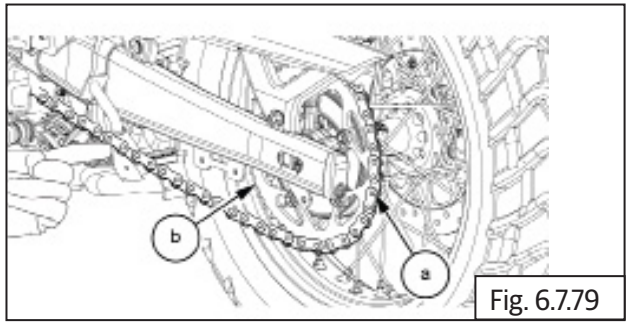

Fig. 6.7.79

- Remove limiter pad and slide brake caliper on to brake disc.
- Assemble chain adjuster assembly **(a)** cap **(b)** with bolt **(c)** into swing arm RHS and LHS.

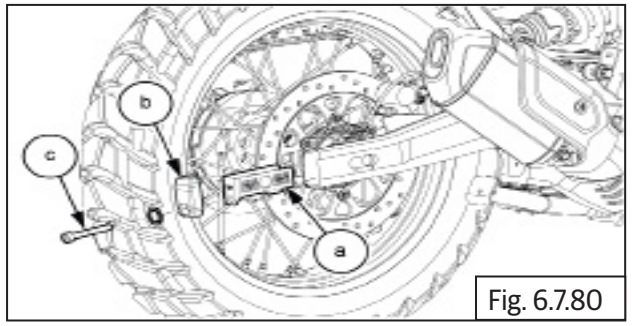

Fig. 6.7.80

- Insert spindle **(a)** with tommy bar into rear wheel hub LH along with washer **(b)**.

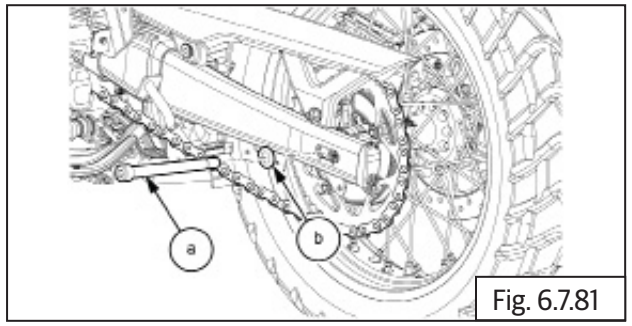

Fig. 6.7.81

	Tommy bar

- Install washer **(a)** into spindle RH.

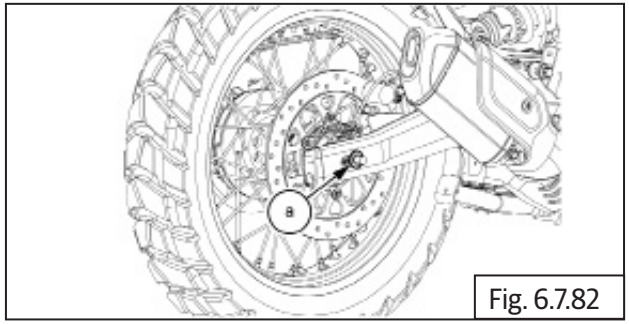

Fig. 6.7.82

- Hold spindle LH with tommy bar **(a)** and tighten the nut **(M16) (b)**.
- Before tighten the spindle refer drive chain free play adjustment.

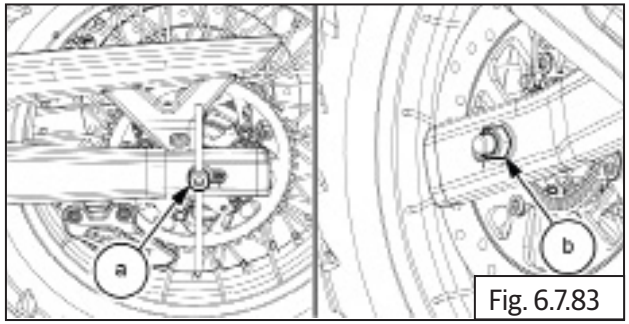

Fig. 6.7.83

	24 mm Ring spanner and Tommy bar
Torque	70 N-m/7.0 kgf-m

- Tighten the adjuster bolt **(M8) (a)** and **(b)** to both LHS and RHS .

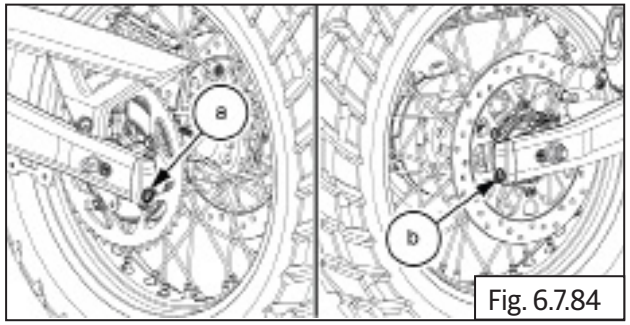

Fig. 6.7.84

	6 mm Allen Key
Torque	25 N-m / 2.5 kgf-m

- After completing rear wheel assembly into motorcycle, ensure chain slack is as per specifications.

6.7.10. Drive Chain Free Play Adjustment

- Vehicle will be placed on the center stand and in neutral gear, ensuring the rear wheel is clear of the ground.

Fig. 6.7.85

- Rotate the wheel until find a position, where the chain slackness is at its lowest / tightest.
- Push the chain upward and downward at the measurement location.

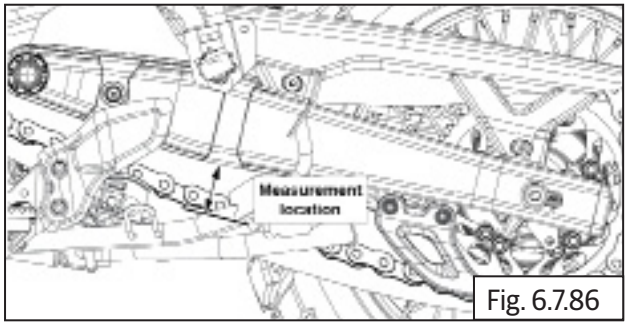

Fig. 6.7.86

- Measure how far the chain moves from the swingarm.

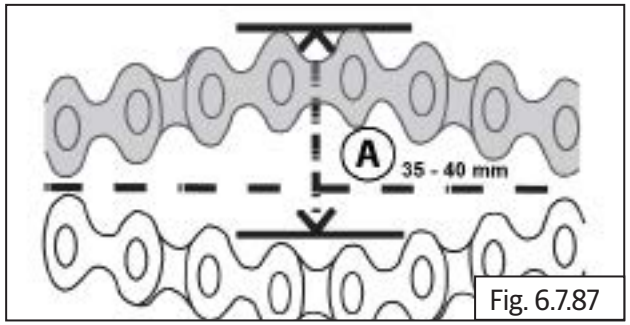

Fig. 6.7.87

- Inspect chain free play at locations using a ruler. Free play for drive chain should be 35 mm to 40 mm.

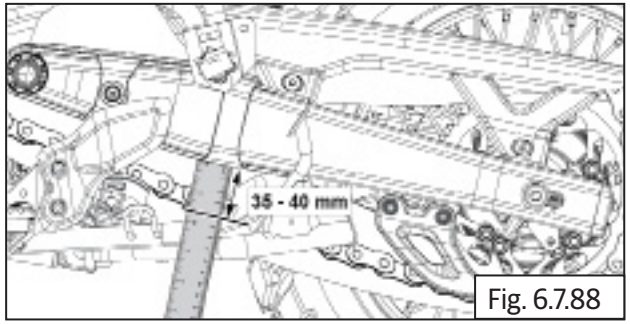

Fig. 6.7.88

- If the free play of the drive chain is not between 35 mm to 40 mm then hold spindle **(a)** on LH using a tommy bar and loosen **(M16) (b)** nut on RH.

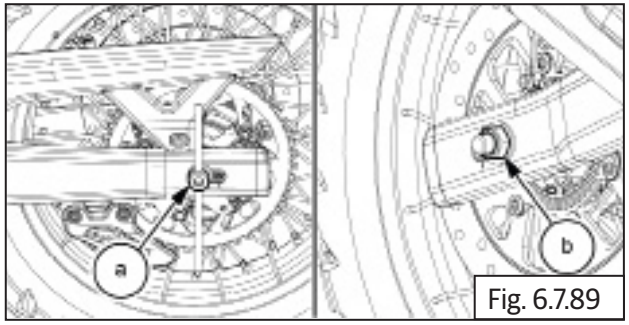

Fig. 6.7.89

	24 mm Ring spanner and Tommy bar

- Push the rear wheel to the extreme front in the swingarm slot.
- To reduce free play tighten the adjuster bolt (M8) **(a)** and **(b)** in both LHS and RHS.

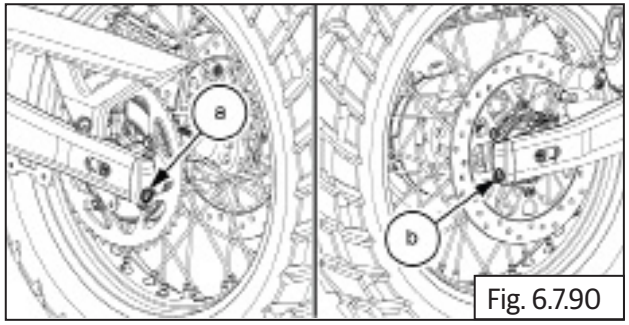

Fig. 6.7.90

	6 mm Allen Key

- Ensure the lines are matched with the lines punched in swing arm on both LH **(a)** & RH **(B)** side for proper wheel alignment.

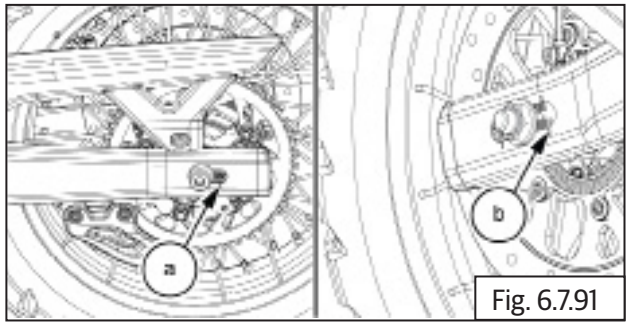

Fig. 6.7.91

- Now measure the drive chain free play using ruler and it should be 35 mm to 40 mm.

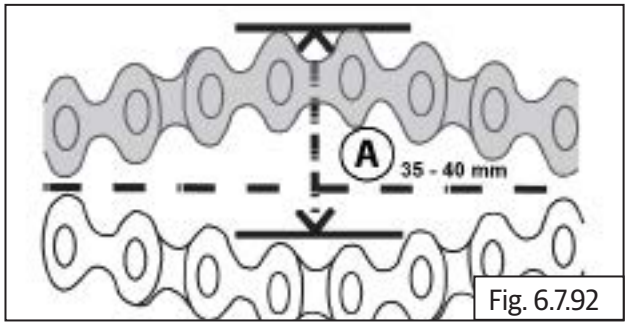

Fig. 6.7.92

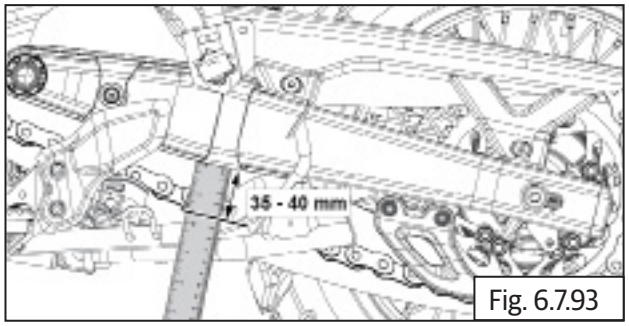

Fig. 6.7.93

⚠ CAUTION
Chain slackness beyond 40 mm will lead to chain slippage or breakage.

- Once chain free play is verified, hold spindle LH with tommy bar **(a)** and tighten the wheel axle nut **(M16) (b)**.

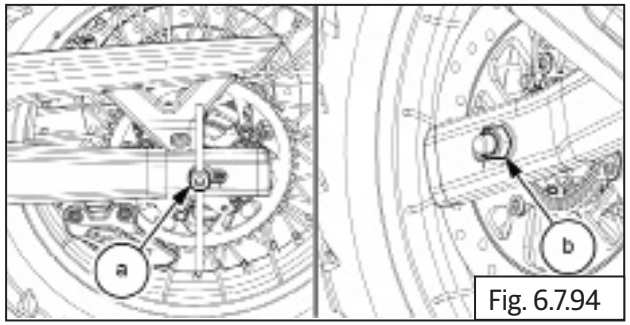

Fig. 6.7.94

	24 mm Ring spanner and Tommy bar
Torque	70 N-m/7.0 kgf-m

- Tighten the adjuster bolt **(M8) (a)** and **(b)** to both LHS and RHS.

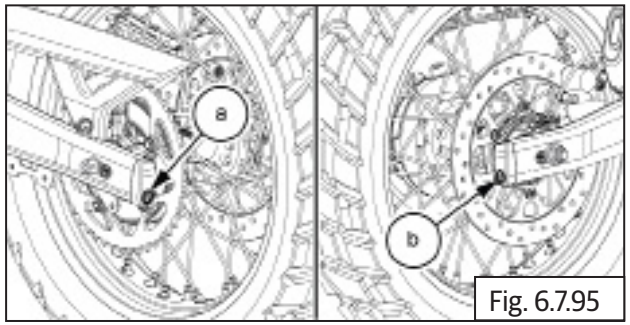

Fig. 6.7.95

	6 mm Allen Key
Torque	25 N-m / 2.5 kgf-m

6.7.11. Tyre Assembly on Wheel Rim

- Ensure the tyre is assembled on the wheel rim with the arrow on the tyre side wall is facing towards the front.
- Inflate tyre to the recommended pressure and ensure the tyre is evenly seated in the rim on both LH and RH sides.

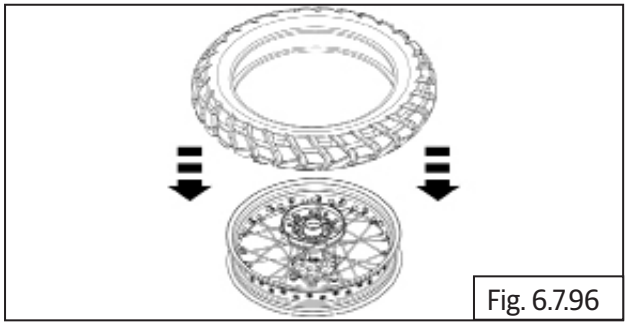
Fig. 6.7.96

6.7.12. Front Wheel and Front Brake Disc

- Insert bearing **(a)** into front wheel hub RH.

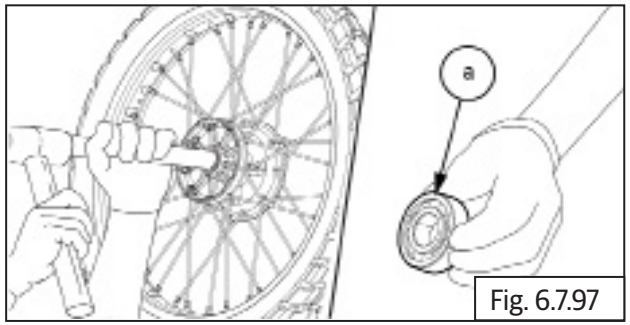

Fig. 6.7.97

	Punch and Mallet

- Insert bearing spacer **(a)** from LH side of front hub **(b)**.

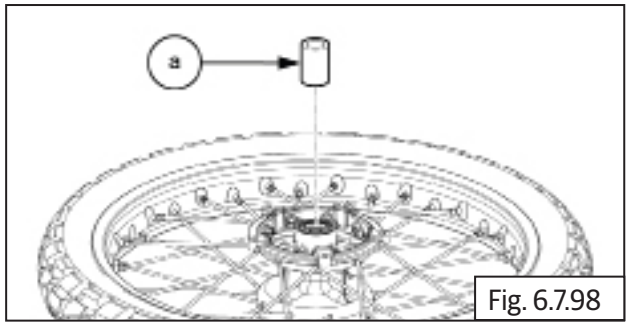

Fig. 6.7.98

- Insert bearing into wheel hub LH **(b)**.

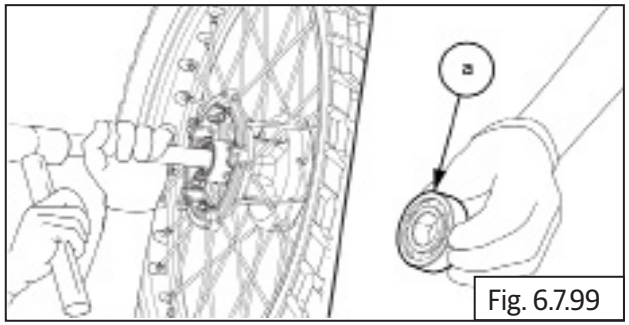

Fig. 6.7.99

	Punch and Mallet

- Apply grease as required on seal to inner and outer diameter surface.
- Install grease seal **(a)** into wheel hub LH and RH with seal installer.

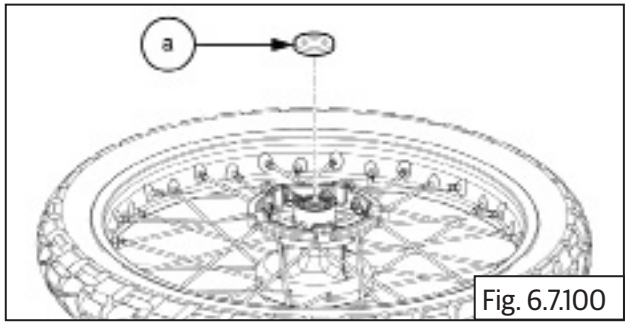

Fig. 6.7.100

	NLGI 2 / Mobil XHP 222

	Seal installer

- Locate front brake disc **(a)** on wheel hub with the disc facing up. Ensure mounting holes are correctly aligned.

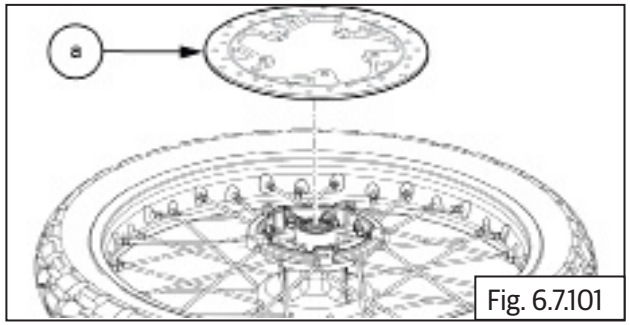

Fig. 6.7.101

- Position toner wheel **(a)** on front disc and ensure mounting holes are correctly aligned.

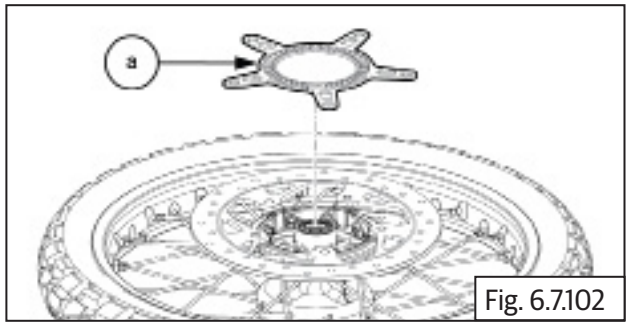

Fig. 6.7.102

- Apply thread sealant on the **5 Nos** button head bolts **(M8) (a)** and allow it to dry for a few minutes.
- Locate the bolts on the mounting holes and tighten toner ring and brake disc to the wheel hub in crisscross patten to specified torque.

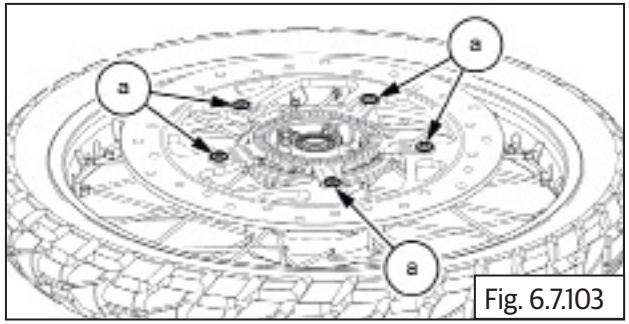

Fig. 6.7.103

	5 mm Allen socket with Ratchet
Torque	25 N-m/2.5 kgf-m

6.7.13. Front Wheel into Front Fork Assembly

- Carefully align front wheel **(a)** into front fork assembly **(b)**.

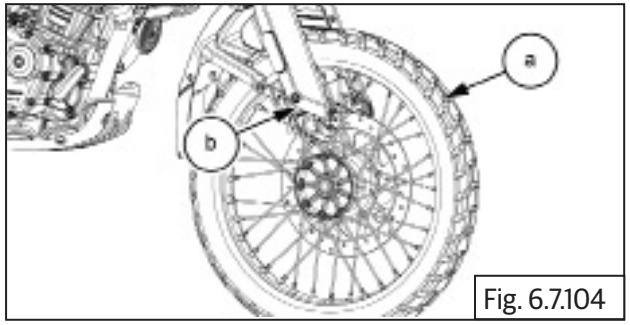

Fig. 6.7.104

- Place the flanged side of the spacers **(a)** towards the both side of the grease seal.

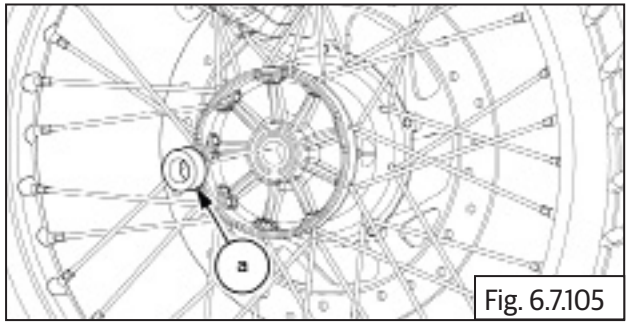

Fig. 6.7.105

- Insert spacer **(a)** and **(b)** into wheel hub on LH and RH.

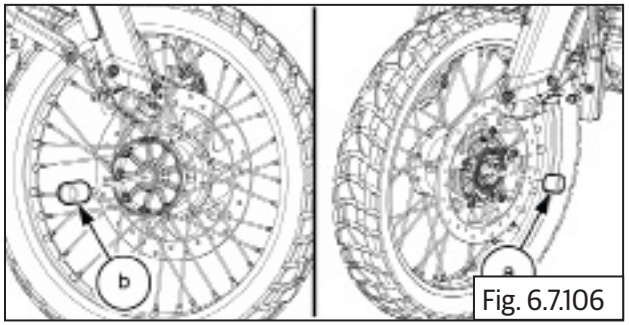

Fig. 6.7.106

NOTE
Due to the damping and undamping force on the LH & RH fork funtionality, the spindle access while installation will not be inline between LH & RH forks.

- Assemble the front wheel spindle **(a)** to the front fork RHS.
- Pull the damper fork (RHS) downwards to align with the fork (LHS), So that the threads on the spindle and inside the LH fork will not be damaged while assembling.

⚠ **CAUTION**
The spindle **(a)** *should be inserted carefully to avoid damaging threads.* **Do not hammer** *the front wheel spindle* **(a)** *once threads are engaged. This could lead to thread damage.*

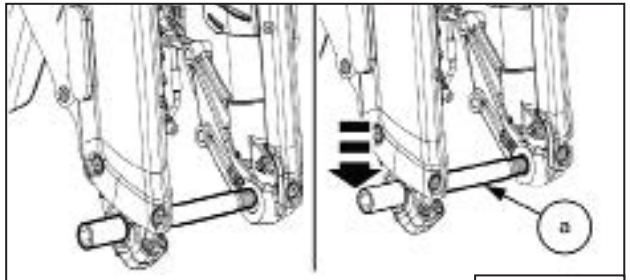

Fig. 6.7.107

- Insert spindle **(a)** into front RH fork assembly and wheel hub.
- Gently tighten spindle **(a)** into front LH fork assembly and wheel hub.

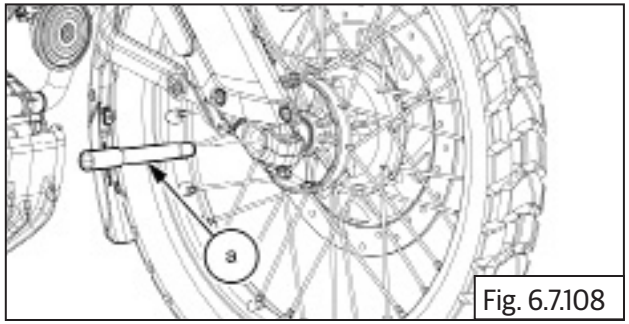

Fig. 6.7.108

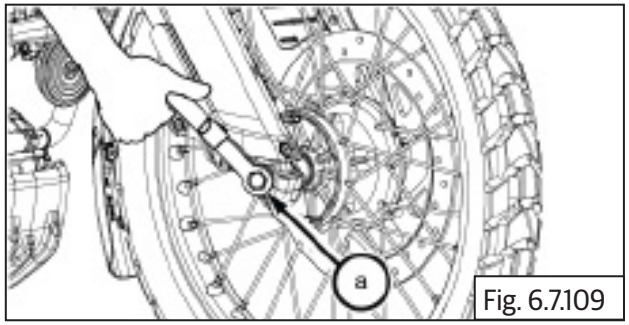

Fig. 6.7.109

	17 mm Allen Socket with Ratchet
Torque	70 N-m/7.0 kgf-m

- Tighten cap bolts **2 Nos (M6) (a)** into front fork assembly RH.

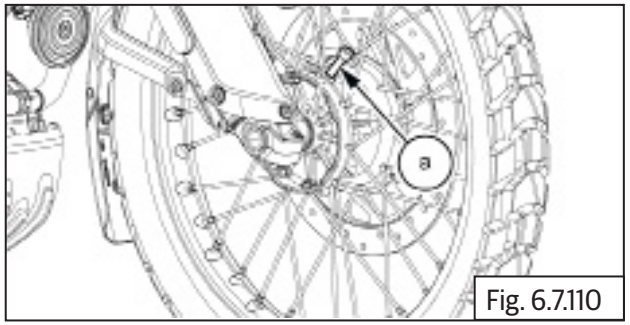

Fig. 6.7.110

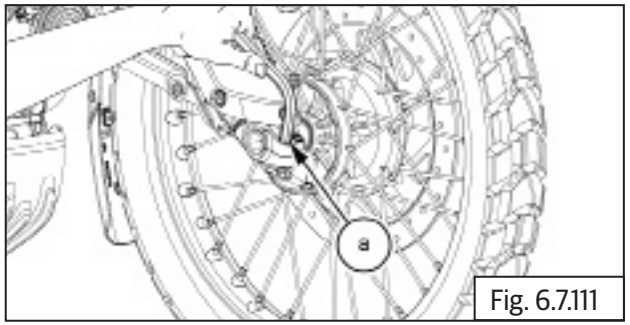

Fig. 6.7.111

	6 mm Allen key
Torque	25N-m / 2.5 kgf-m

Symptom	Possible Cause	Diagnosis	How to Fix	Recommended Specification
1. Tyres Related				
Centre Threads Wear-Out Is High/ Poor Traction/ Unstable Riding.	Tyre pressure is more than recommended.	Front and rear tyre pressure is over inflated.	Ensure correct tyre pressures.	**Solo - Front tyre:** 32 psi/2.24 kg/cm2. **Rear tyre:** 32 psi/2.24 kg/cm2 **With Pillion - Front tyre:** 32 psi/2.24 kg/cm2. **Rear tyre:** 32 psi/2.24 kg/cm2
Side Threads Wear- Out Is High/ Side Wall Has Cracks/ Motorcycle Has Dragging/Unstable Riding.	Tyre pressures is less than recommended.	Front and rear tyre pressure is over inflated.	Check inner tubes for any puncture/ leaky valve pins ensure correct tyre pressures.	**Solo - Front tyre:** 32 psi/2.24 kg/cm2. **Rear tyre:** 32 psi/2.24 kg/cm2 **With Pillion - Front tyre:** 32 psi/2.24 kg/cm2. **Rear tyre:** 32 psi/2.24 kg/cm2
Rear Tyre Wear-Out On One Side.	Improper wheel alignment.	Rear wheel misaligned with respect to front wheel.	Check and correct wheel alignment.	
Tyre/S Wearing Out Is Uneven/ Motorcycle Is Unstable/Wobbling.	Internal defect/poor quality tyre.	Tyres found to have bulges/ cracks in side wall. Threads are separated from the tyre.	Replace with Royal Enfield recommended tyres.	**Front tyre:** 100/90-19 M/C 57H CEAT ZOOM CRUZ Z F TL (Tubeless tyre) **Rear tyre:** 150/80B16 M/C 71H CEAT ZOOM CRUZ Z F TL (Tubeless tyre)
	Tyre seating on rims is improper.	Tyre bead is uneven at the rim surface.	Remove tyre and reset correctly.	
	Wheel rims have a defect.	Wheel rims are bent/ have excessive run out.	Remove tyre and carry out proper wheel truing.	
	Rims have excessive side play.	Wheel bearings worn-out/ excessive play.	Remove and replace wheel bearings.	

2. Wheel Rims Related				
Symptom	**Possible Cause**	**Diagnosis**	**How to Fix**	**Recommended Specification**
Motorcycle Is Unstable/Wobbling.	Tyre seating on rims is improper.	Tyre bead is uneven at the rim surface.	Remove tyre and reset correctly.	
	Wheel rims are out of trueness.	Wheel rims are bent/ have excessive run out.	Remove tyre and true the wheel rim correctly.	
	Wheel rims have a crack/ heavy damage.	Wheel rims are cracked/ damaged due to impact.	Replace with royal enfield genuine wheel rims.	
3. Others				
	Wheels have excessive axial/side play.	Wheel bearings are worn-out.	Remove bearing and replace.	
	Hubs Front/rear are cracked/damaged.	Wheel Hubs are damaged due to impact.	Replace with Royal Enfield genuine hubs.	

NOTE
• *The trouble shooting given in this section is only related to the issues with wheels. For complaints related to other issues such as poor suspension action/handling/unstable ride please refer to suspension .*

6.8. Suspension

CONTENTS **PAGE**

Dismantling.....348

6.8.1 Steering Stem Assembly from Frame Head Tube..... 348

6.8.2 Bottom Roller Bearing from Steering Stem..... 351

6.8.3 Swing Arm..... 352

6.8.3.1 Chain Guard Lower Removal..... 352

6.8.3.2 Chain Guard Removal..... 352

6.8.3.3 Hugger assembly Removal..... 353

6.8.3.4 Swing Arm Assembly..... 354

6.8.3.5 Grab Arm Removal..... 356

6.8.3.6 Chain Rubbing strip Removal..... 357

6.8.3.7 Shock Absorber Removal..... 357

6.8.3.8 Link Rod Removal..... 359

Dismantling

Assembly.....359

6.8.3.9 Link Rod Removal..... 359

6.8.3.10 Shock Absorber Removal..... 360

6.8.3.11 Chain Rubbing strip Removal..... 362

6.8.3.12 Grab Arm Removal..... 362

6.8.3.13 Swing Arm Assembly..... 363

6.8.3.14 Hugger assembly Removal..... 366

6.8.3.15 Chain Guard Removal..... 366

6.8.3.16 Swing Arm..... 367

6.8.4 Bottom Roller Bearing from Steering Stem..... 367

6.8.5. Ball Bearing into Frame top an bottom Head Tube..... 367

6.8.6 Steering Stem Assembly from Frame Head Tube..... 369

6.8.Suspension

Dismantling

6.8.1. Steering Stem Assembly from Frame Head Tube

⚠ CAUTION

Ensure the motorcycle is upright on a firm and flat surface.

- Locate a scissor jack under the engine and lift motorcycle such that the front wheel is off the ground by minimum 6 inches (or 15 cm)

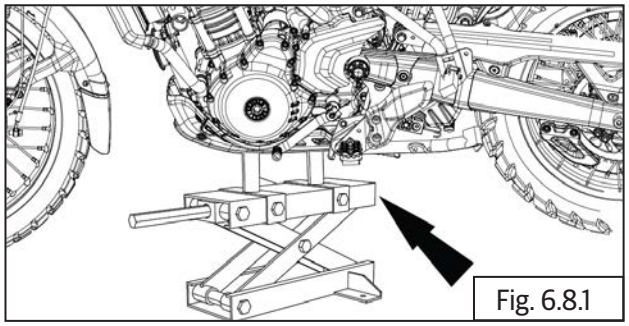

Fig. 6.8.1

- Ensure ignition and stop switch are in off position
- Remove the following parts:
  - Front wheel.
  - Release brake hose and wheel speed sensor wires from the clips.
  - Wheel caliper from fork end LH. Support caliper suitably.
  - Wheel speed sensor from the fork end LH. Support wheel speed sensor suitably
  - Front mudguard.
  - Aggregates of Handlebar
  - Handlebar.
  - Upper Yoke.

⚠ CAUTION

Ensure the motorcycle is upright on a firm and flat surface. Support the motorcycle firmly while removing the Swing arm.

- Loosen and remove 4 Nos. cap bolts **(M8) (a)** from lower yoke.

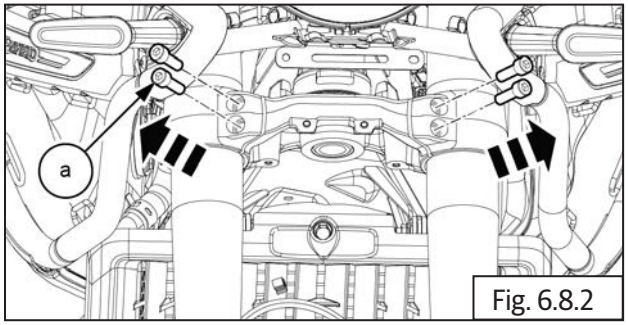

Fig. 6.8.2

	6 mm Allen socket with Ratchet

- Remove both fork assembly **(a)** from steering stem.

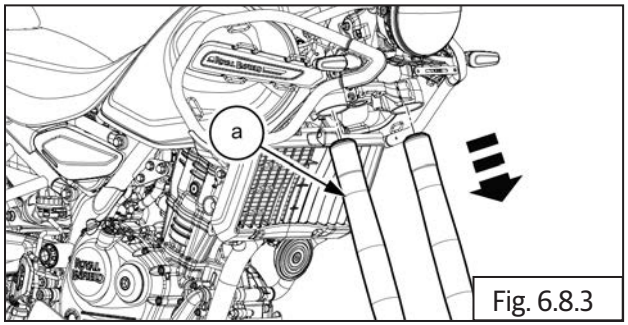

Fig. 6.8.3

- Hold steering stem from bottom and remove tab washer **(a)**.

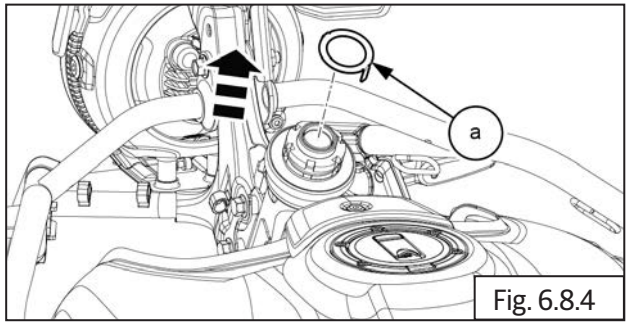

Fig. 6.8.4

- Using special tool **(a)** to Loosen and remove 1st lock nut **(b)** from steering stem.

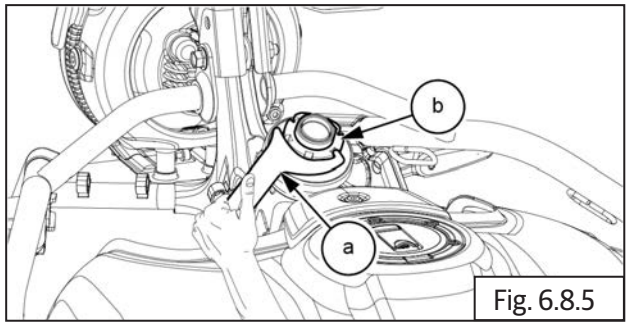

Fig. 6.8.5

SPL	Part No: ST 30969-a
	Part Name: Steering stem nut adjuster

- Remove spacer **(a)** from steering stem.

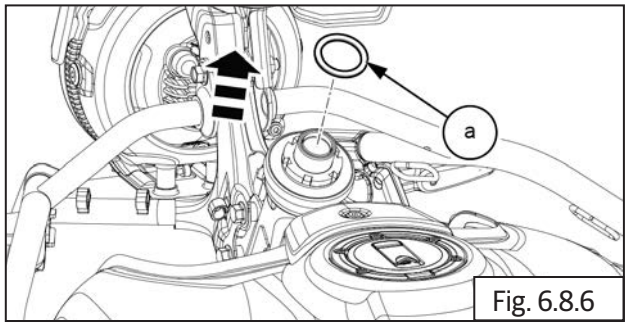

Fig. 6.8.6

- Using special tool **(a)** Loosen and remove 2nd lock nut **(b)** from steering stem.

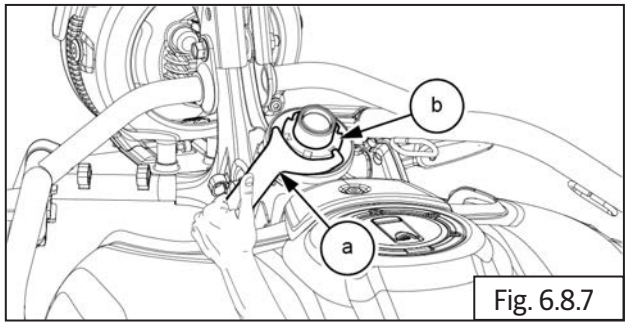

Fig. 6.8.7

SPL	Part No: ST 30969-a
	Part Name: Steering stem nut adjuster

- Hold steering stem from bottom and remove steering seal **(a)**.

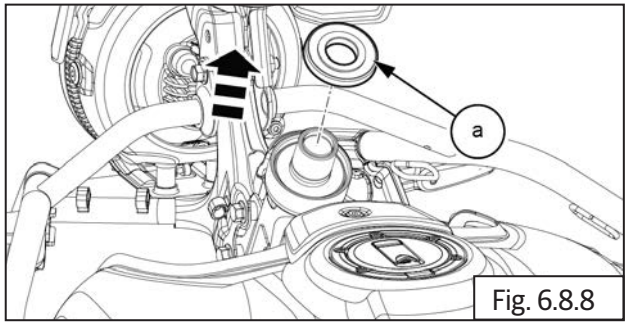

Fig. 6.8.8

- Hold steering stem from bottom and remove head stock seal **(a)**.

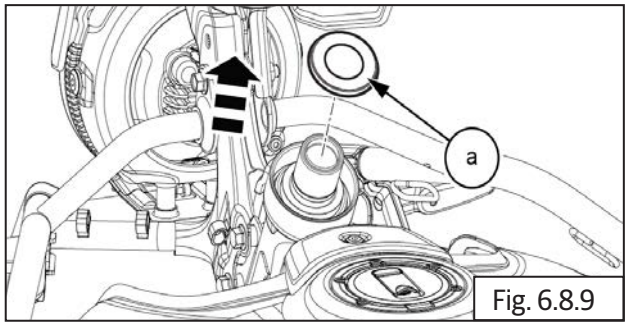

Fig. 6.8.9

- Hold steering stem from bottom and remove spacer **(a)** from head tube top.

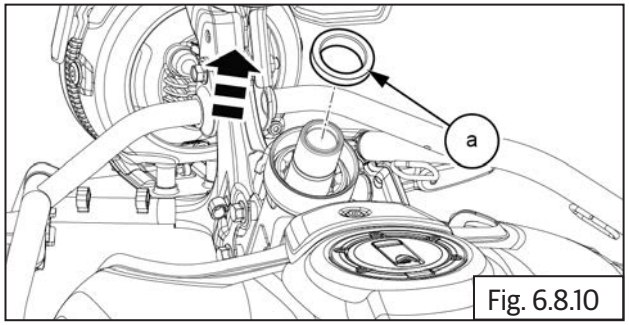

Fig. 6.8.10

- Gently pull out bearing **(a)** from frame top head tube top.

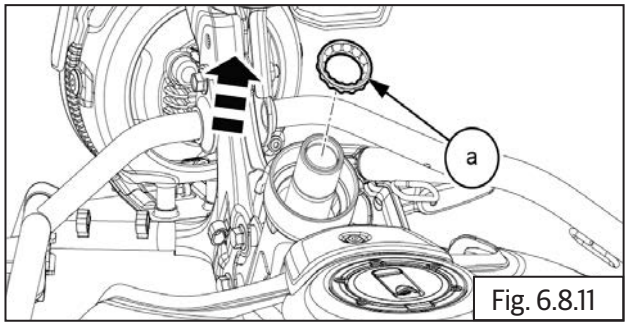

Fig. 6.8.11

- Gently pull out steering stem **(a)** from frame head tube bottom.

⚠ CAUTION

DO NOT tap or use force to remove steering stem from frame head tube.

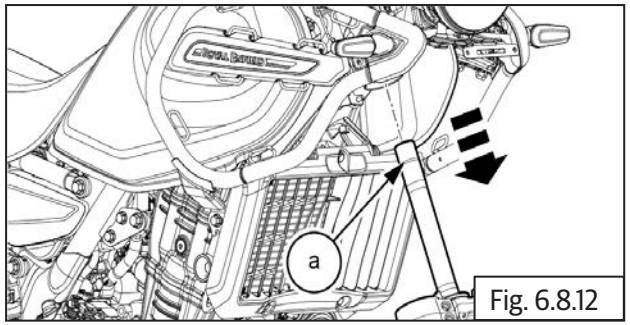

Fig. 6.8.12

- Use special tool **(a)** and remove upper racer **(b)** from head tube top.

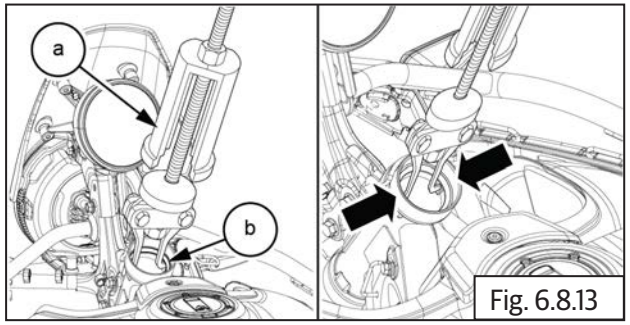

Fig. 6.8.13

	16 mm Double End Spanner

SPL	Part No: ST32155/A
	Part Name: Headstock Bearing Race Removal Tool

- Use special tool **(a)** and remove bottom racer **(b)** from head tube bottom.

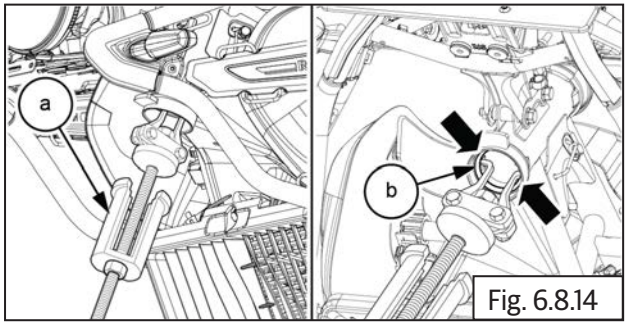

Fig. 6.8.14

	16 mm Double End Spanner

SPL	Part No: ST32155/A
	Part Name: Headstock Bearing Race Removal Tool

6.8.2. Bottom Roller Bearing from Steering Stem

- Use bearing puller T-stem to remove the bearing from T-stem.

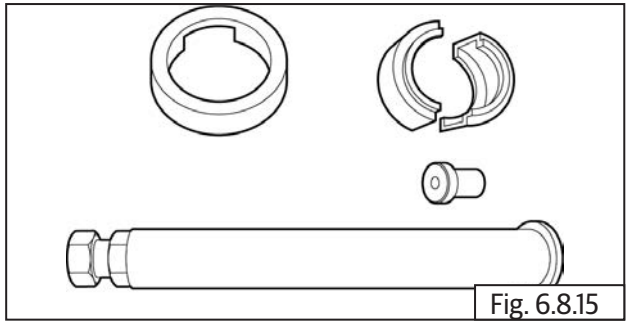

Fig. 6.8.15

SPL	Part No: ST-31889/A ST-32157/A
	Part Name: T-STEM Taper Roller Bearing Remover

- Locate and place the bunk **(a)** on stem top.

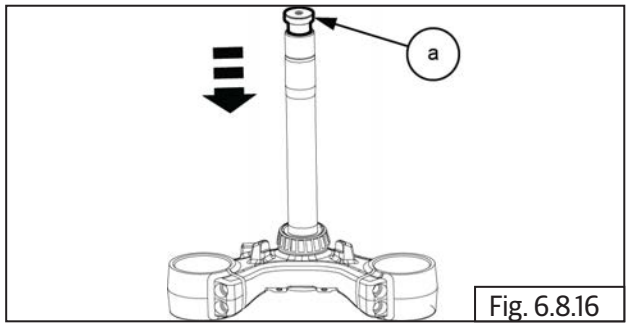

Fig. 6.8.16

SPL	Part No: ST-31889/A ST-32157/A
	Part Name: T-STEM Taper Roller Bearing Remover

- Locate and place the sleeve **(a)** into steering stem.

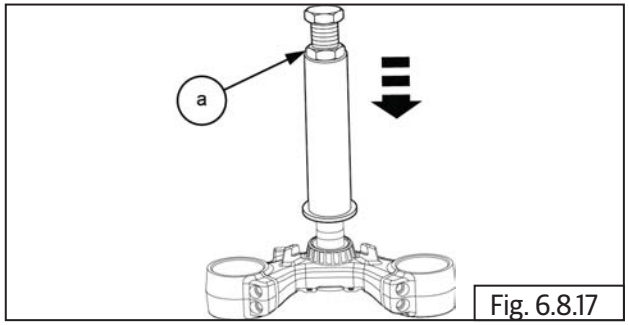

Fig. 6.8.17

SPL	Part No: ST-31889/A ST-32157/A
	Part Name: T-STEM Taper Roller Bearing Remover

- Locate and place two halve plate **(a)** on the bottom sleeve.

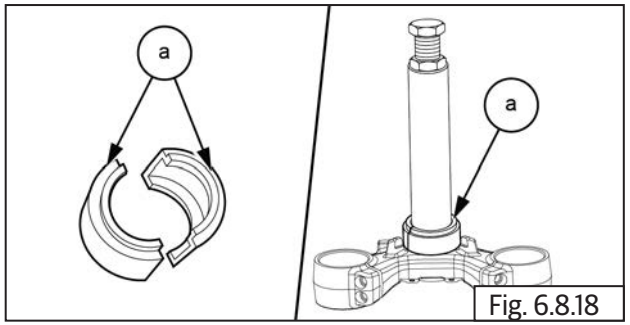

Fig. 6.8.18

SPL	Part No: ST-31889/A ST-32157/A
	Part Name: T-STEM Taper Roller Bearing Remover

- Locate and position the sleeve **(a)** into steering stem.

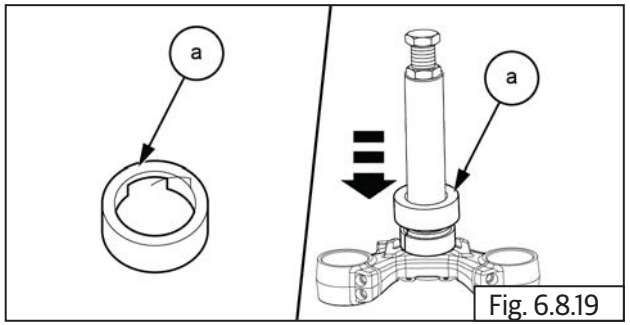

Fig. 6.8.19

SPL	Part No: ST-31889-a
	Part Name: T-STEM Taper Roller Bearing Remover

- Tighten hex nut **(a)** in clockwise direction till bearing tool assembly comes out of frame head tube and hex nut rotates free.

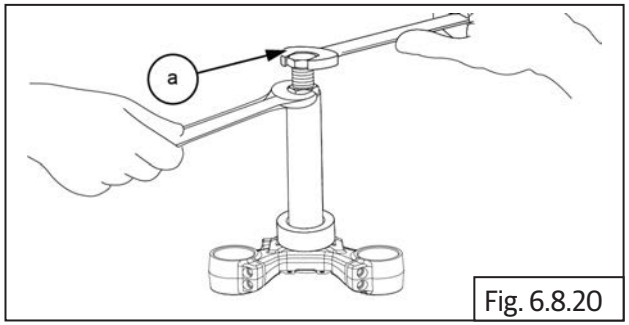

Fig. 6.8.20

	24 mm and 27 mm Double end spanner

- Remove the bearing **(a)** from the bottom of the stem.

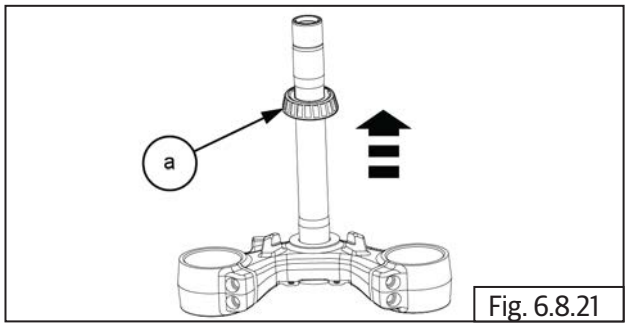

Fig. 6.8.21

6.8.3. Swing arm

Dismantling

- Remove the following parts:
  - Rear wheel

⚠ CAUTION

Support steering stem from bottom. DO NOT allow the steering stem to drop out of frame head tube.

6.8.3.1. Chain Guard Lower Removal:

- Loosen and remove the 2 Nos. cap bolts **(M6) (a)** from swing arm LH.

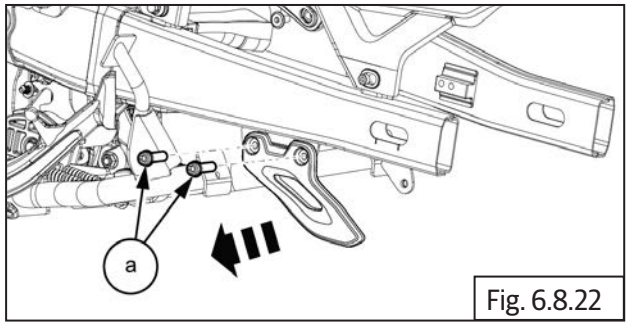

Fig. 6.8.22

	5 mm Allen key with Ratchet

- Remove the chain guard lower **(a)** from swing arm.

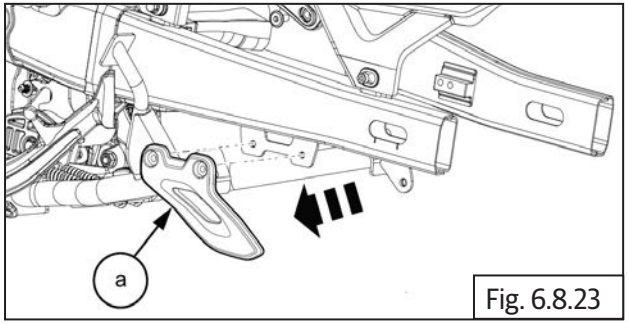

Fig. 6.8.23

6.8.3.2. Chain Guard Removal:

- Loosen and remove the 1 No. **(M6)** hex bolt **(a)** along with 1 No. washer **(b)** from chain guard upper.

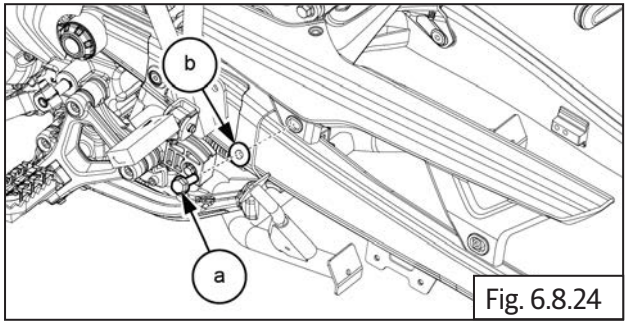

Fig. 6.8.24

	10 mm Socket with Ratchet

- Loosen and remove the 1 No.cap bolt **(M6) (a)** from chain guard upper.

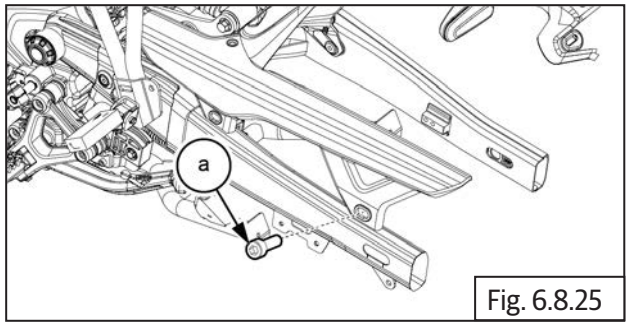

Fig. 6.8.25

	5 mm Allen key with Ratchet

- Loosen and remove the 1 No. button head bolt **(M6) (a)** from chain guard top.

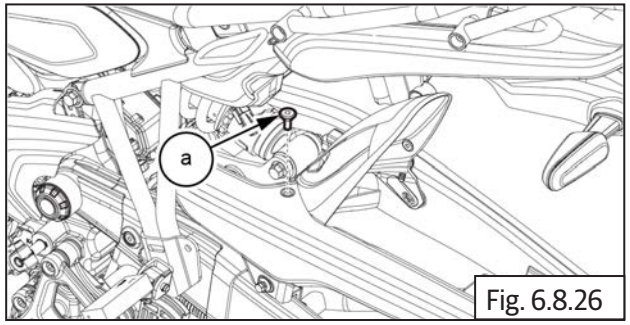

Fig. 6.8.26

	5 mm allen key with Ratchet

- Gently pull out the chain guard upper **(a)** from swing arm assembly.

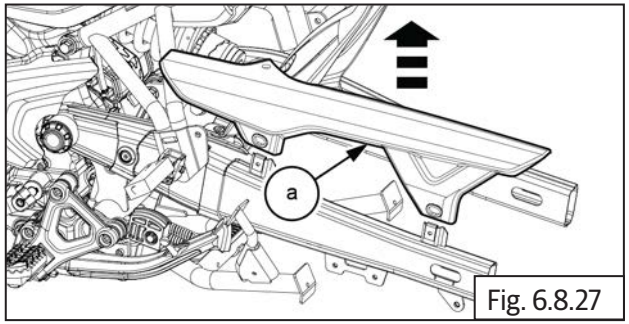

Fig. 6.8.27

6.8.3.3. Hugger assembly Removal:

- Remove the corrugated conduct clips **(a)** from hugger assembly.

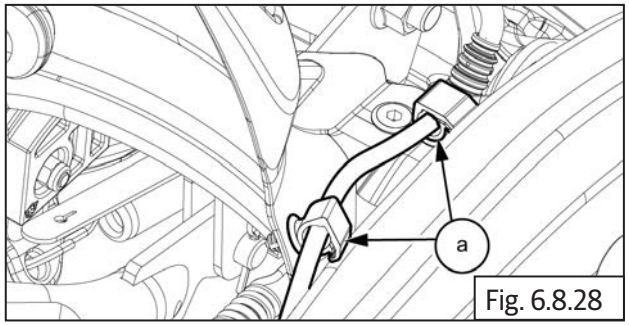

Fig. 6.8.28

- Loosen and remove the 3 Nos. button head bolts **(M6) (a)** from hugger assembly.

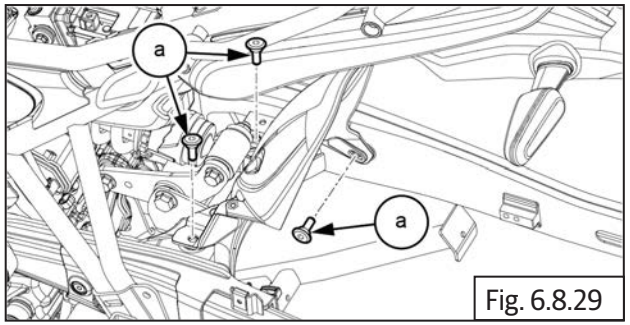

Fig. 6.8.29

	5 mm allen key with Ratchet

- Remove the hugger assembly **(a)** from swing arm.

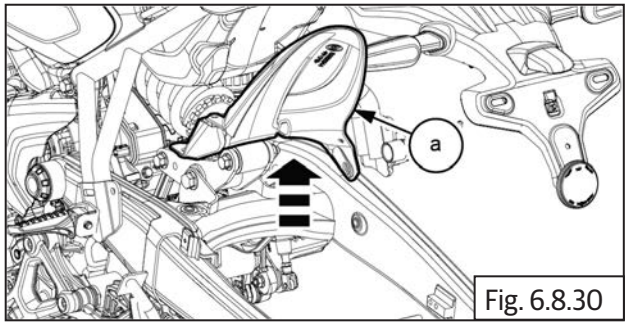

Fig. 6.8.30

6.8.4.4. Swing Arm Assembly Removal:

- Loosen and remove 3 Nos. Hex socket head bolts **(a)** from chain sprocket cover.

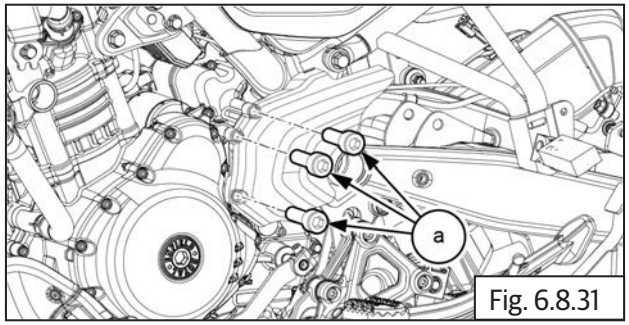

Fig. 6.8.31

	5 mm Allen key with Ratchet

- Remove the chain sprocket cover **(a)** from engine.

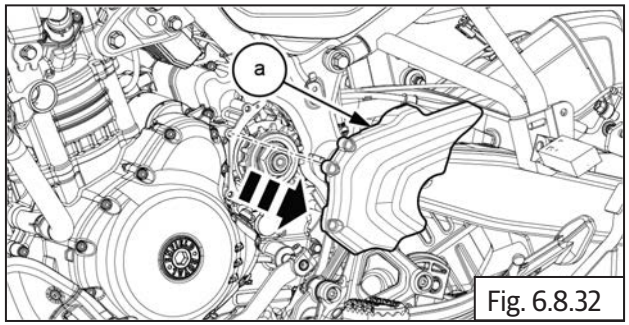

Fig. 6.8.32

- Remove the drive chain **(a)** from the sprocket.

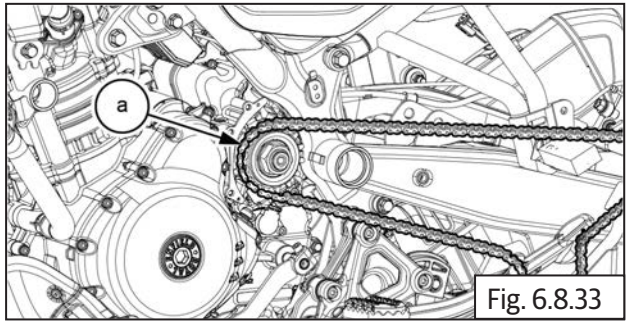

Fig. 6.8.33

- Loosen and remove the 1 No. Hex head bolt **(M10) (a)** with flange nut **(b)** from drag arm.

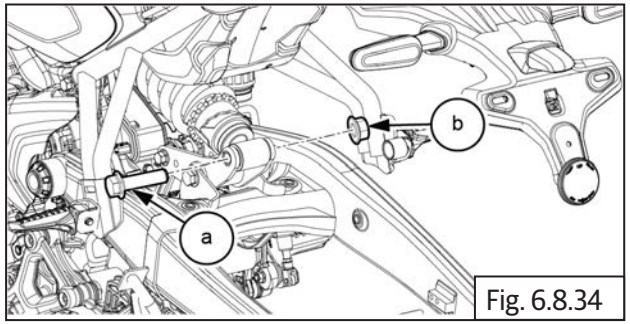

Fig. 6.8.34

	14 mm Socket with Ratchet 17 mm Double end spanner

- Loosen and remove the 1 No. Hex head bolt **(M10) (a)** with flange nut **(b)** from link rod.

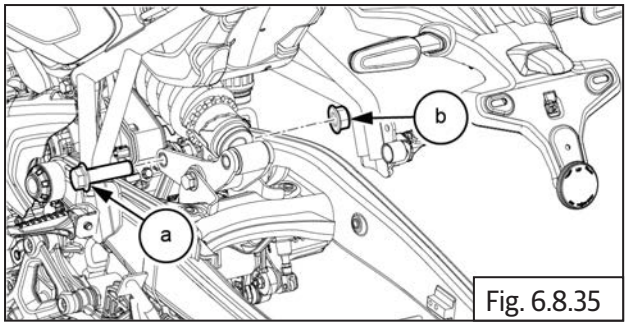

Fig. 6.8.35

	14 mm Socket with Ratchet 17 mm Double end spanner

- Remove pivot cap **(a)** from LHS & RHS swing arm spindle.

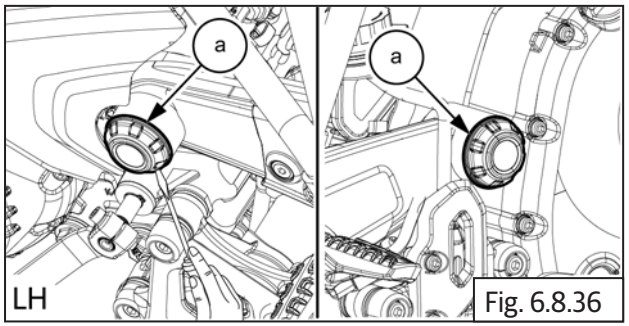

Fig. 6.8.36

	Screw driver

- Hold spindle bolt **(M16) (a)** in frame RH side and loosen and remove hex nut **(M16) (b)** from LH side.

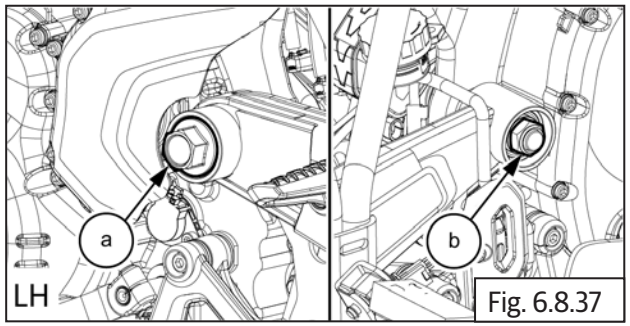

Fig. 6.8.37

	22 mm Socket with Ratchet 24 mm Socket with Ratchet

- Remove the spindle **(a)** along with thrust washer **(b)** from LH side.

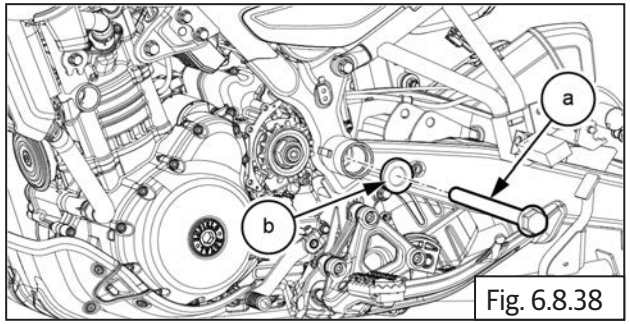

Fig. 6.8.38

- Provide suitable support below chassis frame and remove swing arm **(a)** from chassis frame.

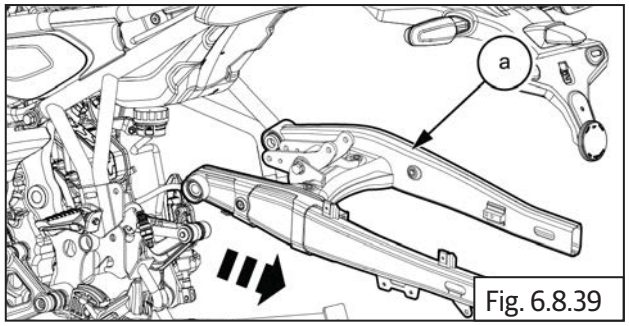

Fig. 6.8.39

- Remove the seal spacer **(a)** and thrust washer **(b)** from swing arm LH.

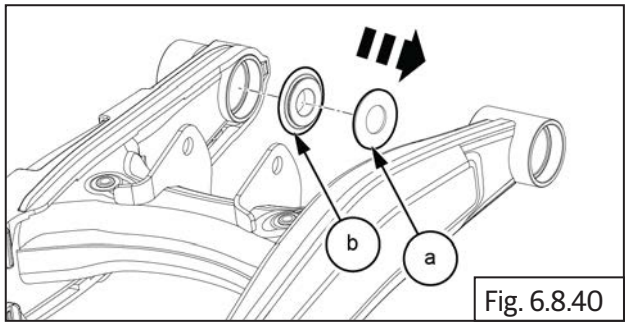

Fig. 6.8.40

- Remove the seal spacer **(a))** from swing arm RH .

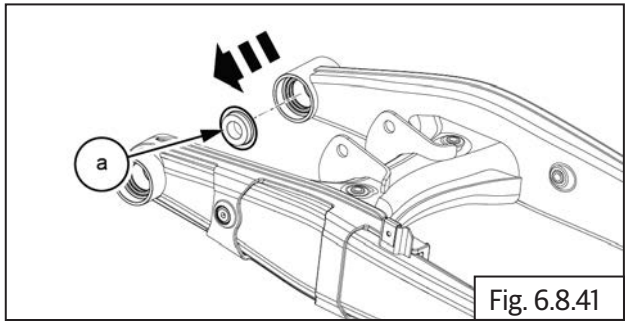

Fig. 6.8.41

- Remove the sleeve **(a)** from swing arm LH.

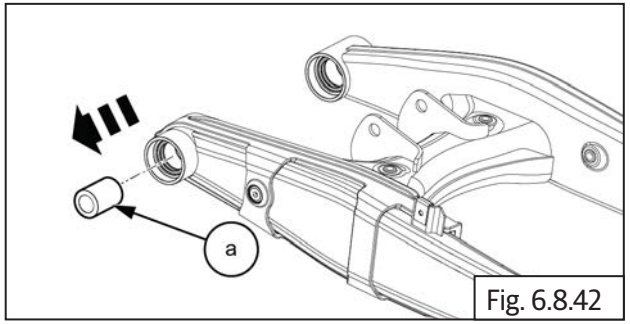

Fig. 6.8.42

- Remove the sleeve **(a)** from swing arm RH.

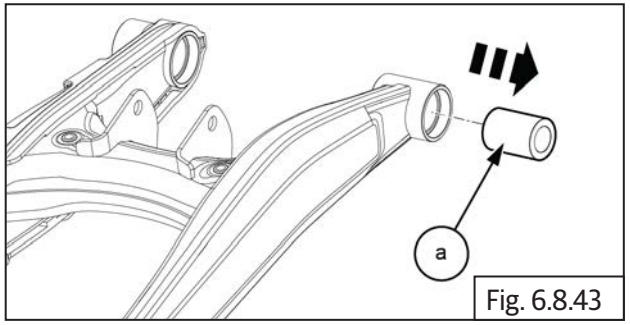

Fig. 6.8.43

- Remove the seal spacer 4 Nos **(a)** from swing arm assembly.

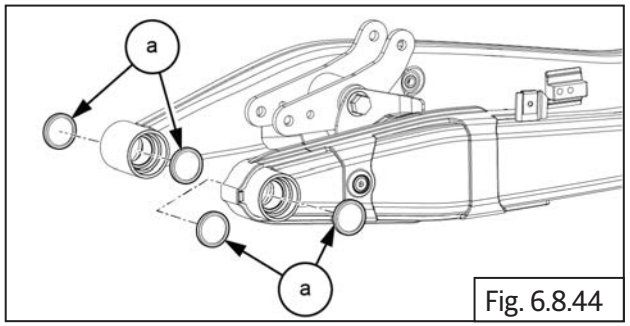

Fig. 6.8.44

- Remove the Ball bearing **(a)** from swing arm LH.

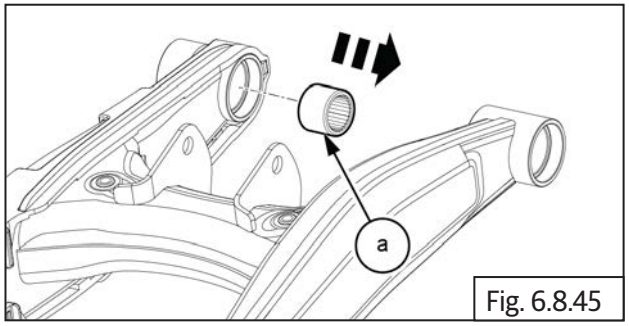

Fig. 6.8.45

- Remove the bearing **(a)** from swing arm RH.

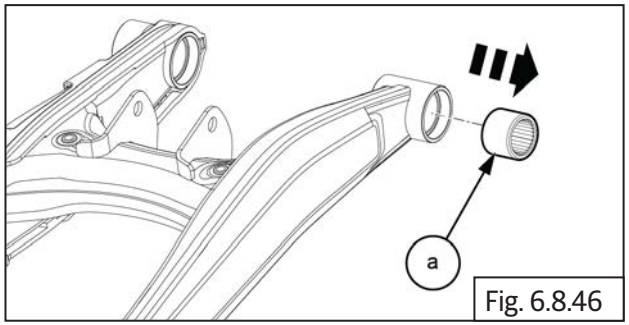

Fig. 6.8.46

6.8.3.5. Grab Arm Removal:

- Loosen and remove the 1 No. Hex head bolt **(M12) (a)** with flange nut **(M12) (b)** from rocker assembly.

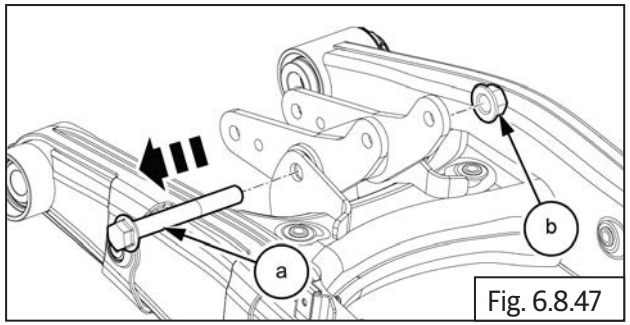

Fig. 6.8.47

	17 mm socket with Ratchet 19 mm Double end spanner

- Remove the rocker assembly **(a)** from swing arm assembly.

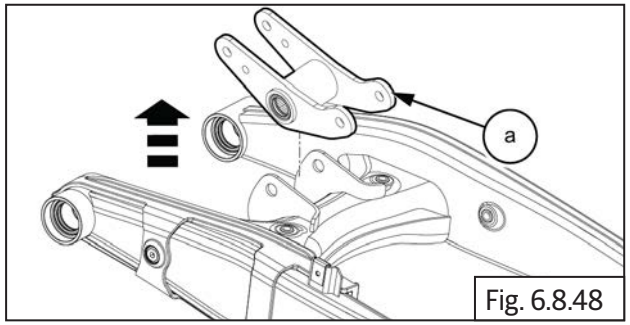

Fig. 6.8.48

- Remove the rocker sleeve **(a)** from rocker assembly.

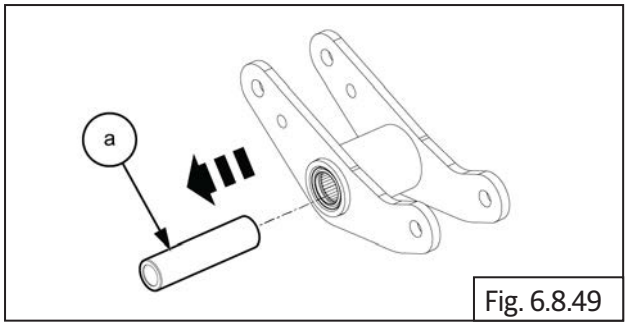

Fig. 6.8.49

- Remove the 2 Nos. seal **(a)** from rocker assembly.

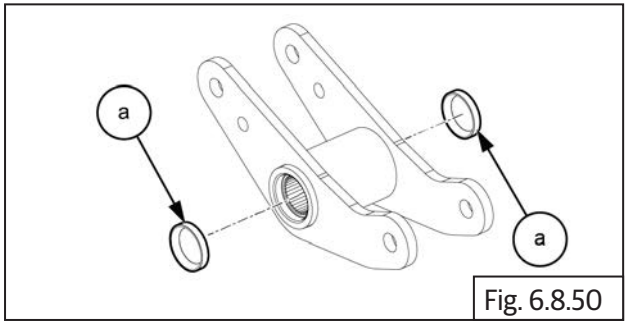

Fig. 6.8.50

- Remove the 2 Nos. bearings **(a)** from rocker assembly.

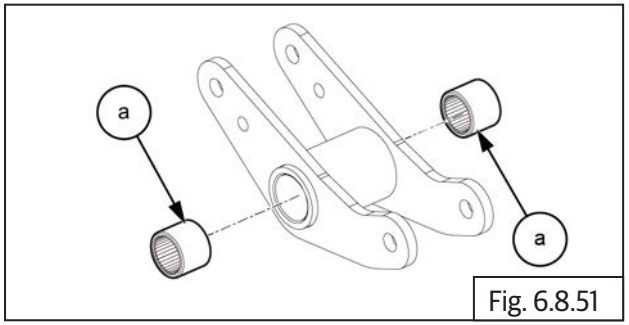

Fig. 6.8.51

6.8.3.6. Chain Rubbing strip Removal:

- Loosen and remove 1 No. button head bolt **(M6) (a)** from Swing arm LH outer side.

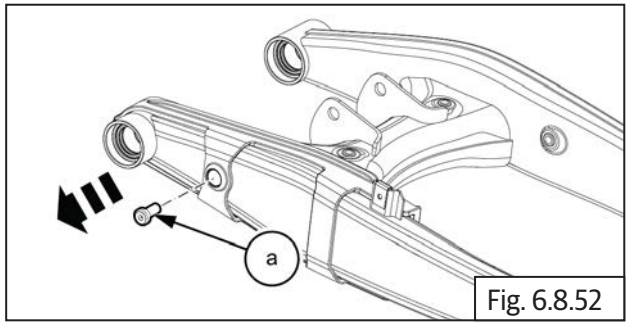

Fig. 6.8.52

	5 mm allen key with Ratchet

- Loosen and remove 1 No. cap bolt **(M6) (a)** along with bracket **(b)** from Swing arm LH inner side.

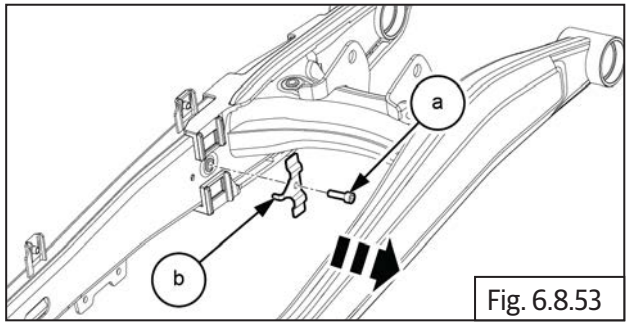

Fig. 6.8.53

	5 mm allen key with Ratchet

- Separate chain rubbing stripe **(a)** from Swing arm LH.

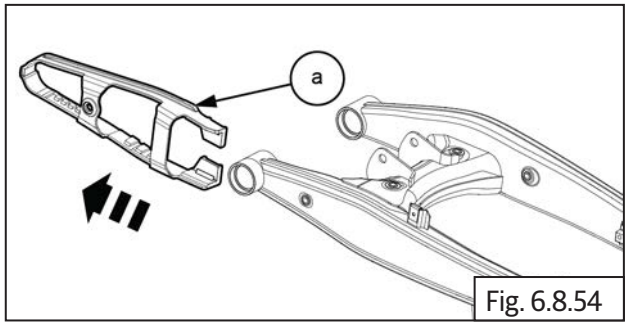

Fig. 6.8.54

6.8.3.7. Shock Absorber Removal:

- Loosen and remove the 1 No. Hex head bolt **(M10) (a)** with flange U nut **(M10) (b)** from the shock absorber bottom.

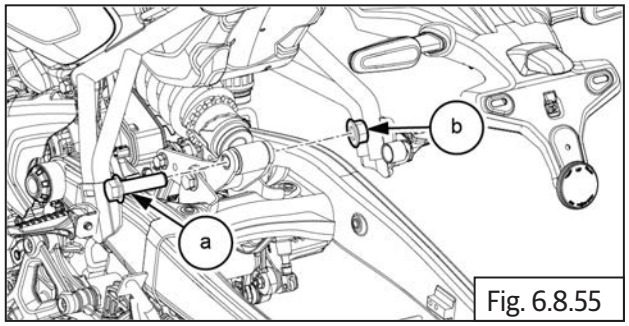

Fig. 6.8.55

	14 mm Socket with Ratchet 17 mm Double end spanner

- Loosen and remove the 1 No. Hex head bolt **(M10) (a)** with flange U nut **(b)** from the shock absorber top.

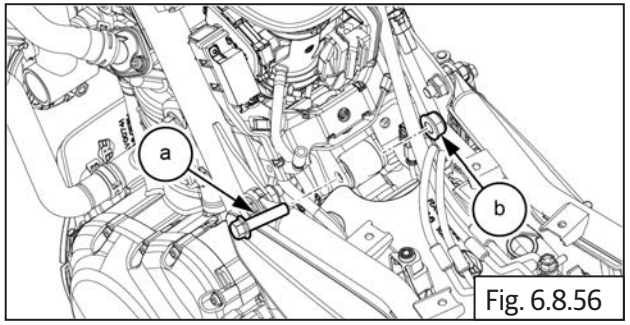

Fig. 6.8.56

	14 mm Socket with Ratchet 17 mm Double end spanner

- Gently remove rear shock absorber **(a)** from the main frame.

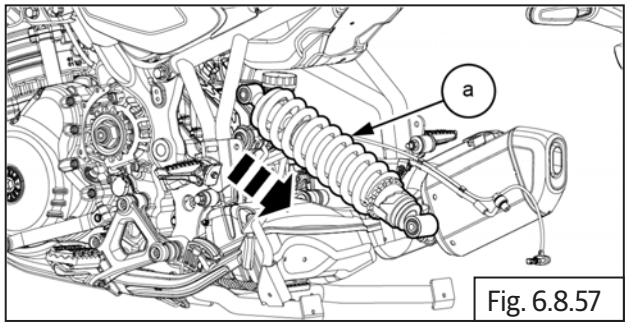

Fig. 6.8.57

- Gently remove spacer **(a)** from rear shock absorber top end.

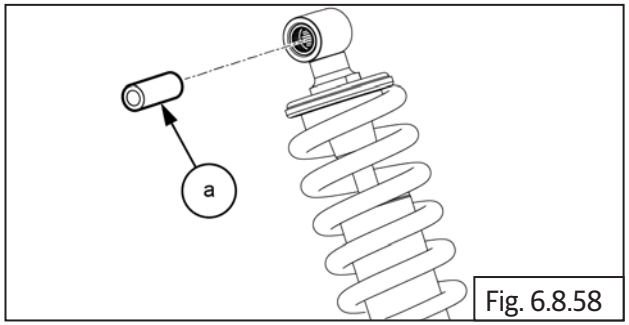

Fig. 6.8.58

- Gently remove the 2 Nos.plastic washer **(a)** from rear shock absorber top end.

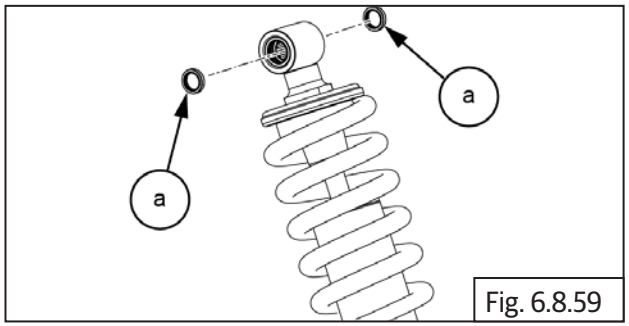

Fig. 6.8.59

	Screw driver

- Gently remove the bearing **(a)** from rear shock absorber top end.

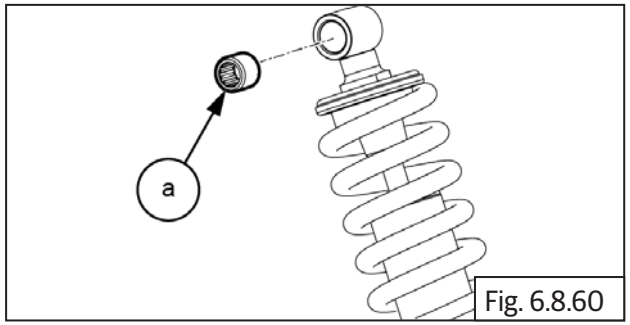

Fig. 6.8.60

- Gently remove spacer **(a)** from rear shock absorber bottom end.

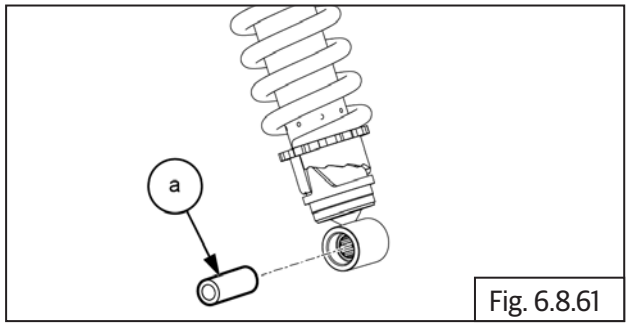

Fig. 6.8.61

- Gently remove the 2 Nos.plastic washer **(a)** from rear shock absorber bottom end.

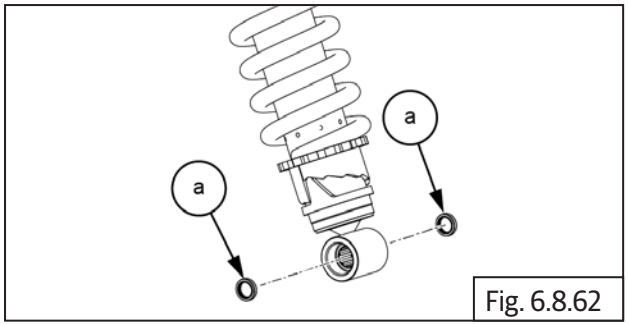

Fig. 6.8.62

	Screw driver

- Gently remove the bearing **(a)** from rear shock absorber bottom end.

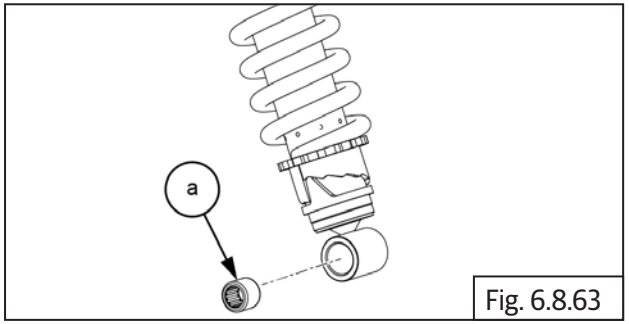

Fig. 6.8.63

6.8.3.8. Link Rod Removal:

- Loosen the 1 No. cap bolt **(M12) (a)** with flange U nut **(M12) (b)** from link rod.

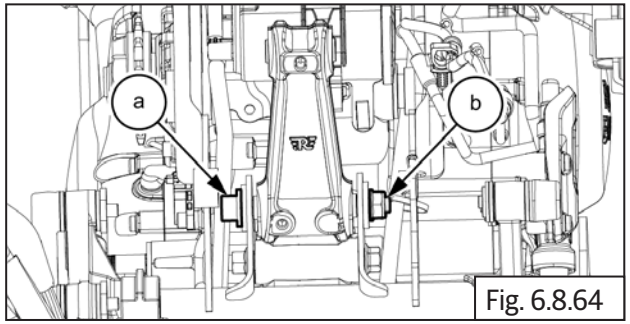

Fig. 6.8.64

	8 mm Allen key with Ratchet 15 mm Double end spanner

- Remove the 1 No. cap bolt **(a)** along with washer **(b)** and nut **(mx) (c)** from link rod.

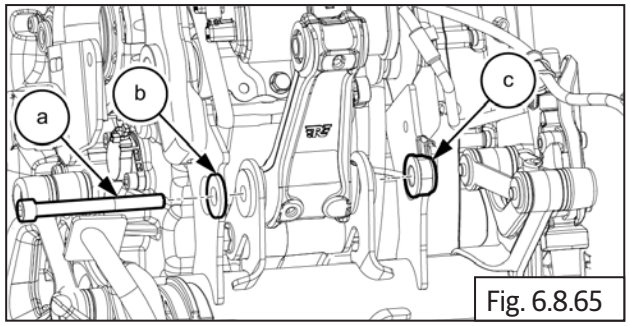

Fig. 6.8.65

- Remove the link rod **(a)** from main frame.

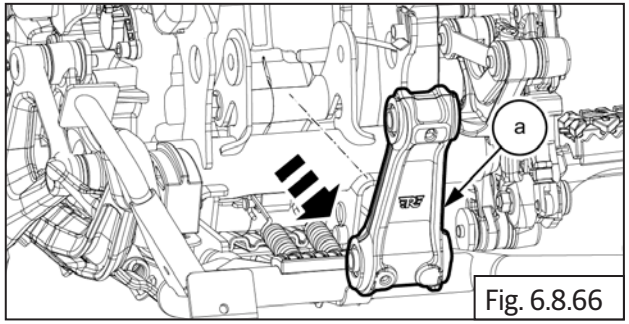

Fig. 6.8.66

- Gently remove the 2 Nos. Spacers **(a)** from link rod.

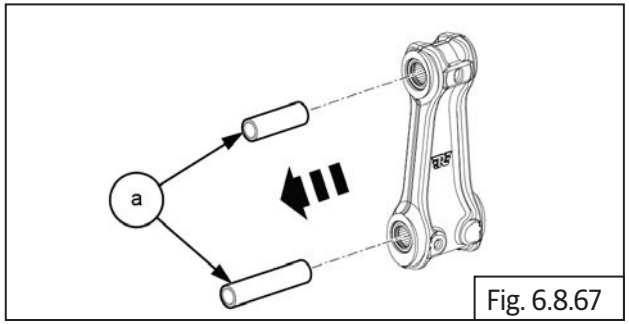

Fig. 6.8.67

- Gently remove the 4 Nos. plastic washers **(a)** from link rod.

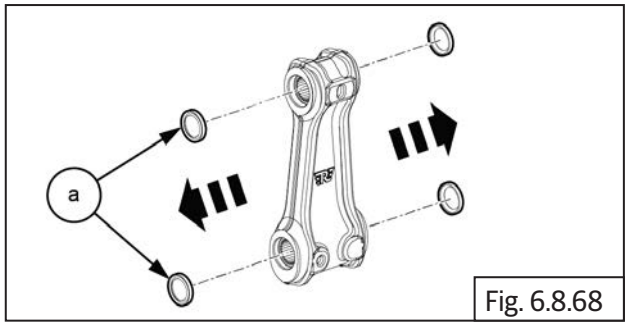

Fig. 6.8.68

- Gently remove the 4 Nos. Bearings **(a)** from link rod.

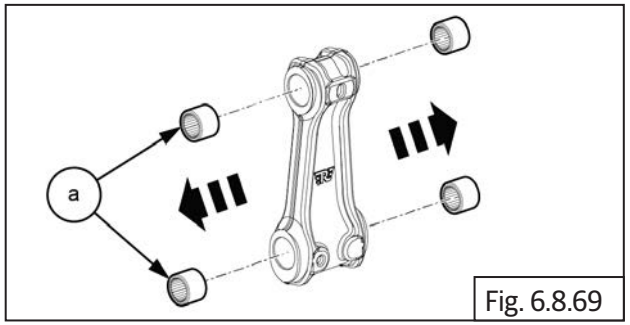

Fig. 6.8.69

Inspection

Assembly

6.8.3.9. Link Rod:

- Apply grease on the needle roller bearing **(a)** before installing.
- Install the 4 Nos. Bearings **(a)** into the link rod.

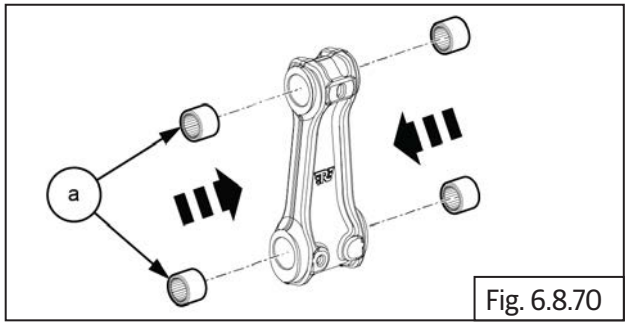

Fig. 6.8.70

- Install the 4 Nos. seals **(a)** into the link rod.

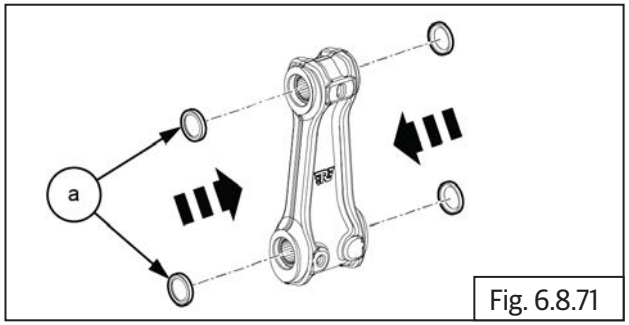

Fig. 6.8.71

- Apply grease on the ground sleeve before installing
- Install the 2 Nos. Spacers **(a)** into the link rod.

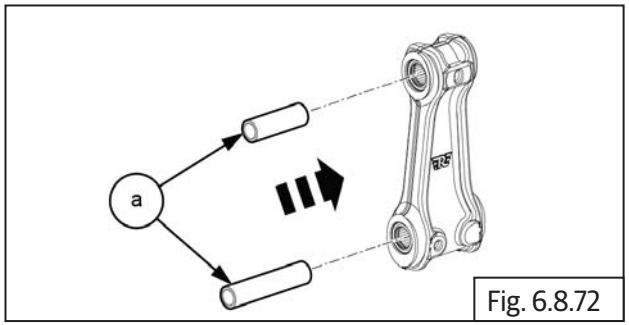

Fig. 6.8.72

- Locate link rod **(a)** into main frame.

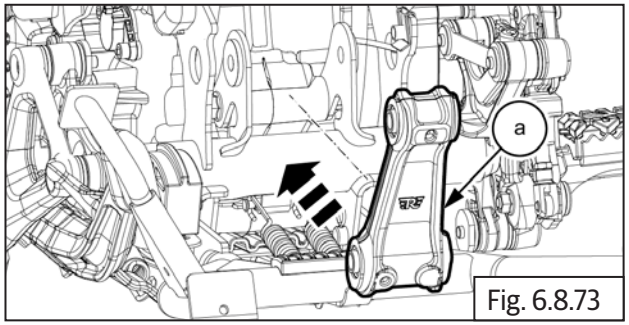

Fig. 6.8.73

- Install 1 No. cap bolt **(a)** along with washer **(b)** and flange U nut **(M12) (c)** into link rod.

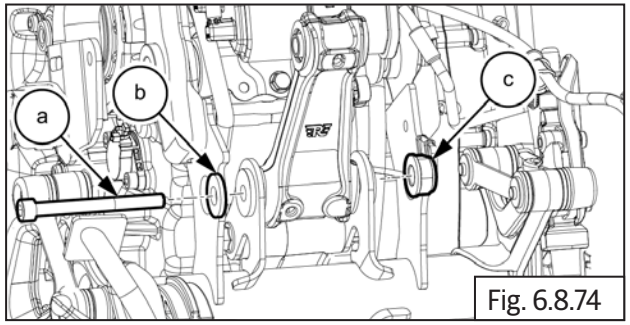

Fig. 6.8.74

- Tighten the 1 No. cap bolt **(a)** with U nut **(M12) (b)** into link rod.

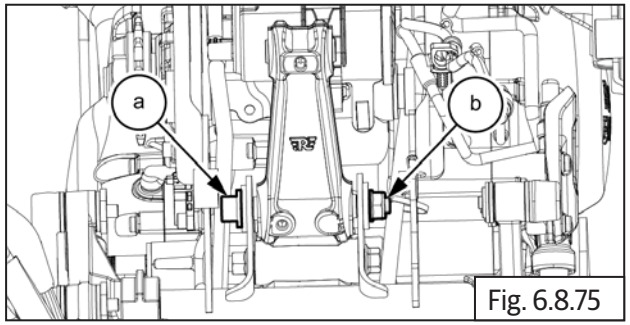

Fig. 6.8.75

	8 mm Allen Socket with Ratchet 15 mm Double end spanner
Torque	70 N-m / 7.0 kgf-m

6.8.3.10. Shock Absorber

- Apply grease on the needle roller bearing **(a)** before installing.
- Install the roller bearing **(a)** into rear shock absorber bottom end.

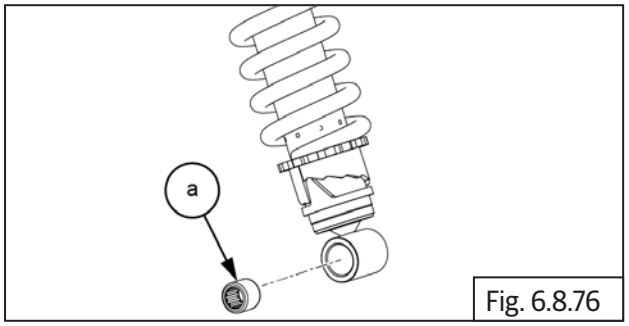

Fig. 6.8.76

- Install the 2 Nos.plastic washer **(a)** into rear shock absorber bottom end.

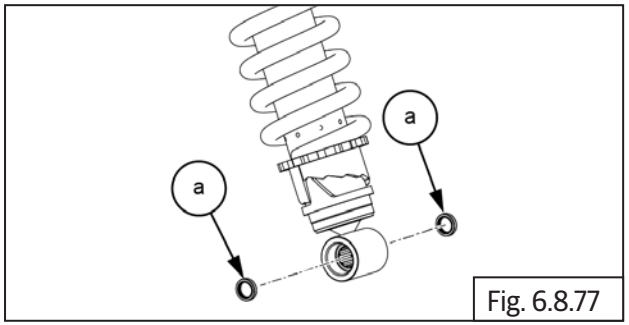

Fig. 6.8.77

- Apply grease on the ground sleeve before installing
- Install spacer **(a)** into rear shock absorber bottom end.

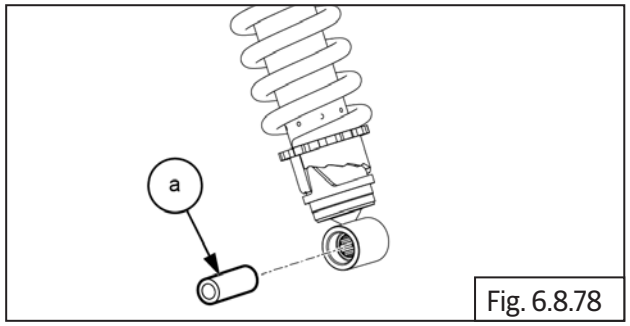

Fig. 6.8.78

- Apply grease on the needle roller bearing **(a)** before installing.
- Install the roller bearing **(a)** into rear shock absorber top end.

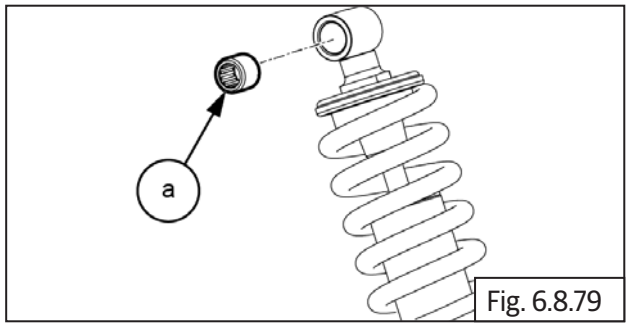

Fig. 6.8.79

- Install the 2 Nos.plastic washer **(a)** from rear shock absorber top end.

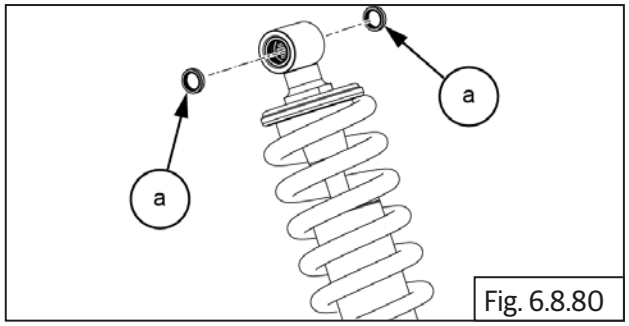

Fig. 6.8.80

- Apply grease on the ground sleeve before installing
- Install sleeve **(a)** from rear shock absorber top end.

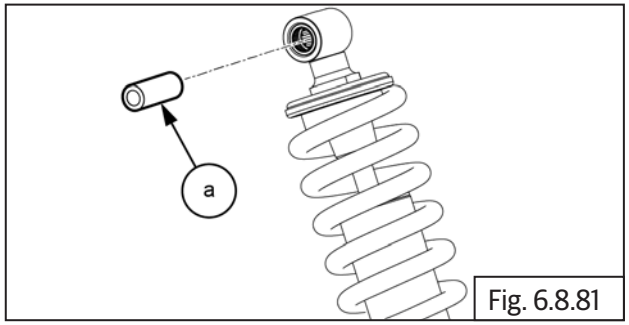

Fig. 6.8.81

- Gently install rear shock absorber **(a)** into main frame.

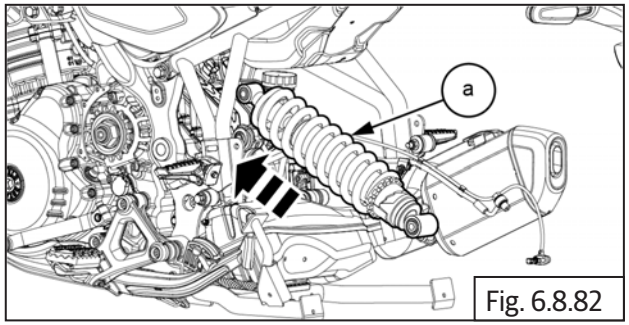

Fig. 6.8.82

- Locate and tighten the 1 No. Hex head bolt **(M12)** **(a)** with U nut **(b)** into the shock absorber bottom.

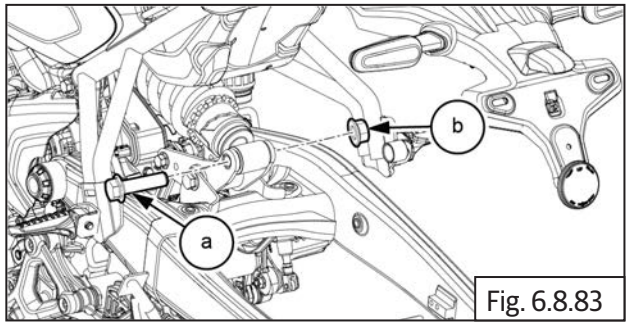

Fig. 6.8.83

	14 mm Socket with Ratchet 17 mm Double end spanner
Torque	60 N-m / 6.0 kgf-m

- Locate and tighten the 1 No. Hex head bolt **(M10)** **(a)** with U nut **(b)** from the shock absorber top.

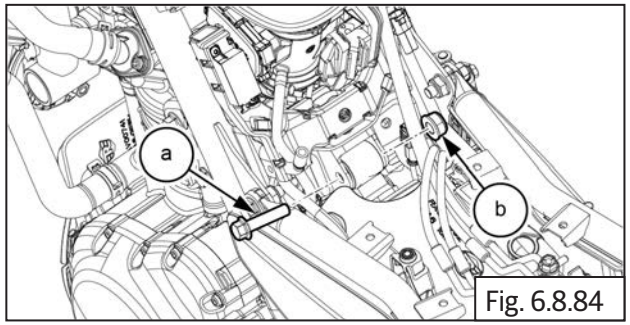

Fig. 6.8.84

	14 mm Socket with Ratchet 17 mm Double end spanner
Torque	45 N-m / 4.5 kgf-m

6.8.3.11. Chain Rubbing strip

- Locate chain rubbing stripe **(a)** on the LH side and align mounting holes.

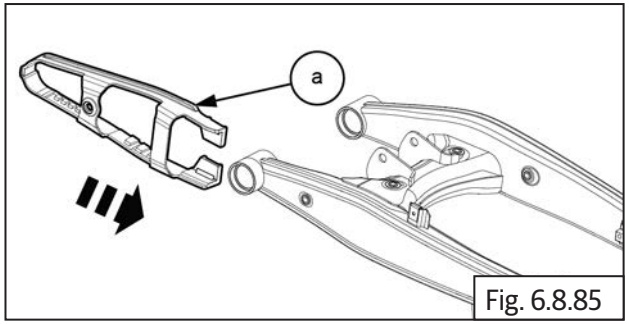

Fig. 6.8.85

- Locate and tighten 1 No. button head bolt **(M6) (a)** into Swing arm LH outer side.

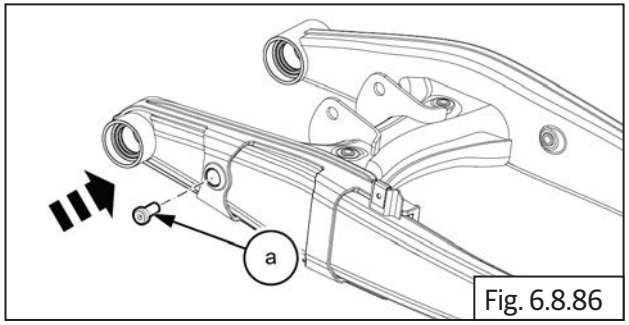

Fig. 6.8.86

	5 mm Allen Socket with Ratchet
Torque	10 N-m / 1.0 kgf-m

- Locate and tighten 1 No. cap bolt **(M6) (a)** along with bracket **(b)** into Swing arm LH inner side.

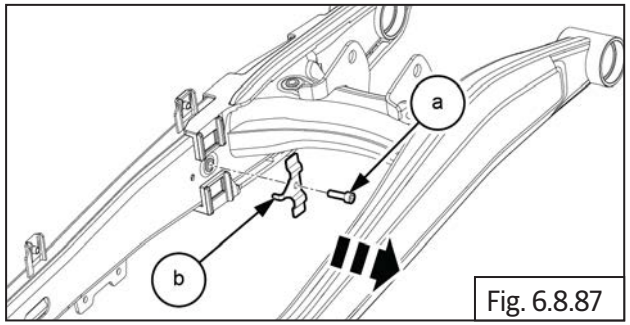

Fig. 6.8.87

	5 mm Allen Socket with Ratchet
Torque	10 N-m / 1.0 kgf-m

6.8.3.12. Grab Arm

- Apply grease on the needle roller bearing **(a)** before installing.
- Locate and install the 2 Nos. bearing **(a)** into rocker assembly.

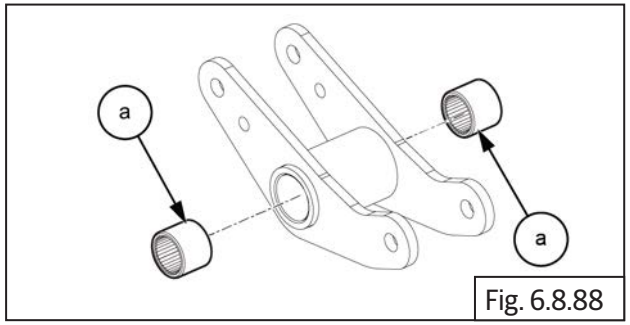

Fig. 6.8.88

- Locate and install the 2 Nos. plastic washer **(a)** into rocker assembly.

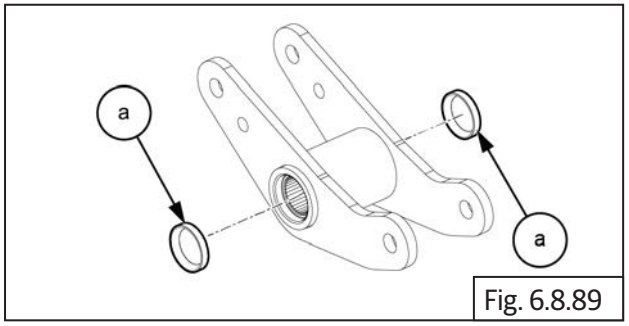

Fig. 6.8.89

- Apply grease on the ground sleeve before installing.
- Locate and install the sleeve **(a)** into rocker assembly.

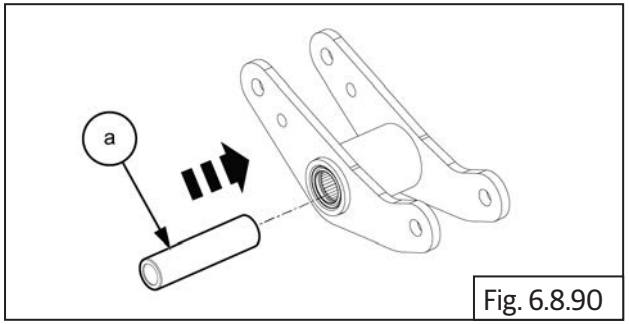

Fig. 6.8.90

- Locate the rocker assembly **(a)** into swing arm assembly.

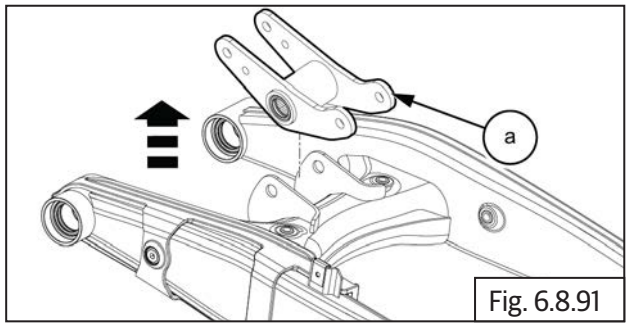

Fig. 6.8.91

- Locate and install the 1 No. Hex head bolt **(M12) (a)** with U nut **(b)** into rocker assembly.

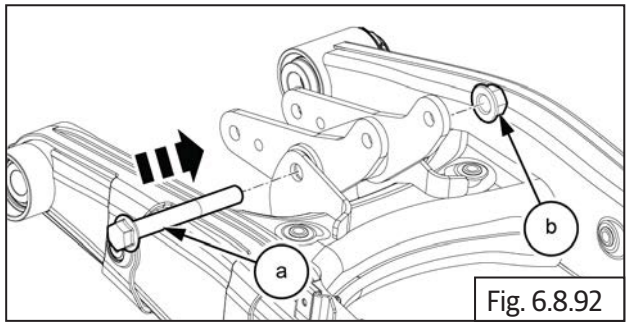

Fig. 6.8.92

	17 mm Socket with Ratchet 19 mm Double end spanner
Torque	70 N-m / 7.0 kgf-m

6.8.3.13. Swing Arm Assembly

- Apply grease on the needle roller bearing **(a)** before installing.
- Using special tool **(b)** locate and install needle roller bearing **(a)** into swing arm RH.

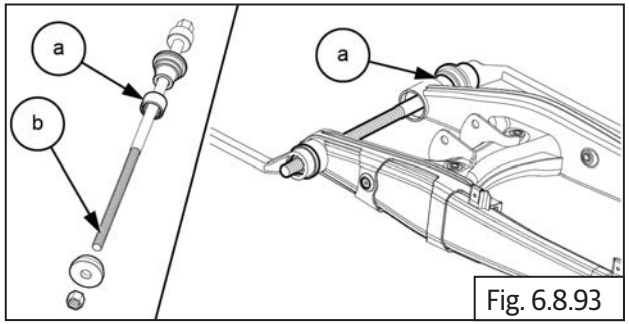

Fig. 6.8.93

SPL	
	Part No:ST-32158/A
	Part Name: Swingarm NRB Installer Tool

- Using special tool **(b)** locate and install needle roller bearing **(a)** into swing arm LH.

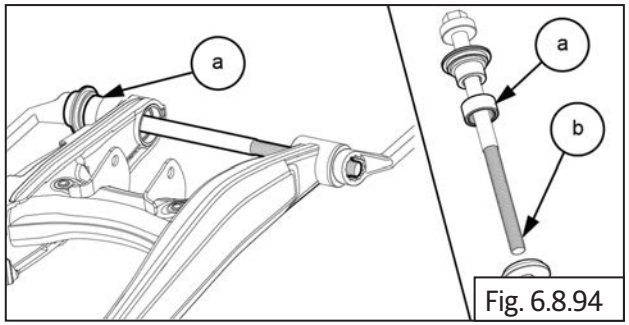

Fig. 6.8.94

SPL	
	Part No:ST-32158/A
	Part Name: Swingarm NRB Installer Tool

- Using special tool **(b)** Locate the seal spacer 4 Nos **(a)** into swing arm assembly.

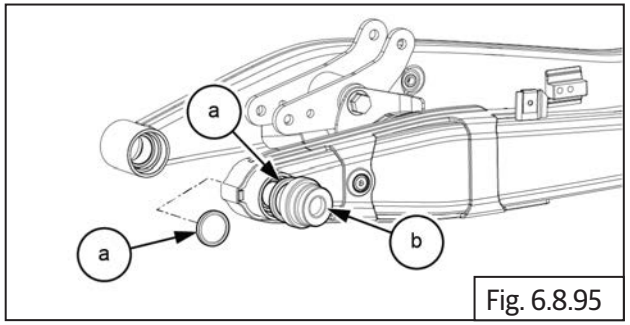

Fig. 6.8.95

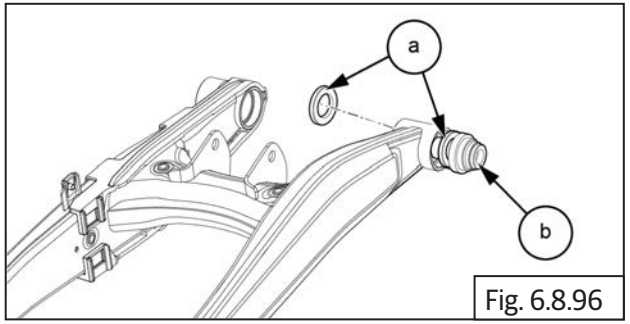

Fig. 6.8.96

SPL	
	Part No:ST-32158/A
	Part Name: Swingarm NRB Installer Tool

- Apply grease on the ground sleeve before installing
- Locate and install ground sleeve **(a)** into swing arm RH.

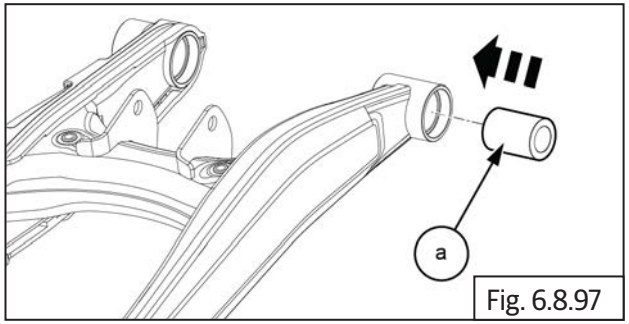

Fig. 6.8.97

- Locate and install ground sleeve **(a)** into swing arm LH.

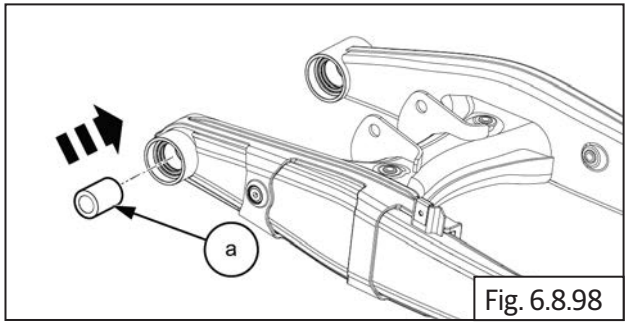

Fig. 6.8.98

- Locate and install seal spacer **(a))** into swing arm RH .

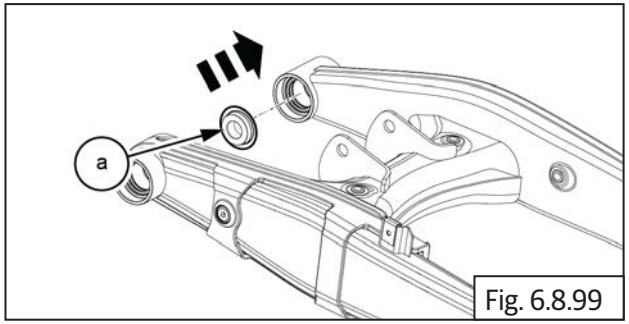

Fig. 6.8.99

- Locate and install thrust washer **(b)** and seal **(a)** from swing arm LH.

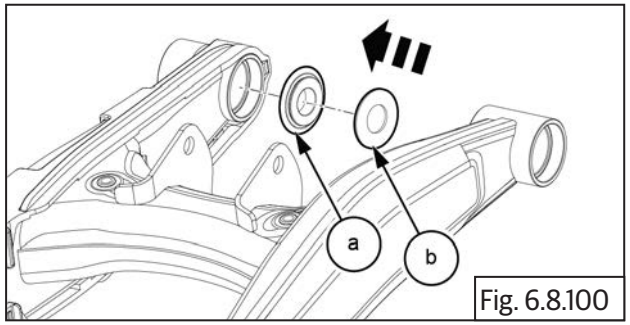

Fig. 6.8.100

- Provide suitable support below chassis frame and install swing arm **(a)** from chassis frame.
- Position Swing arm **(a)** assembly into frame and ensure mounting holes are aligned properly.

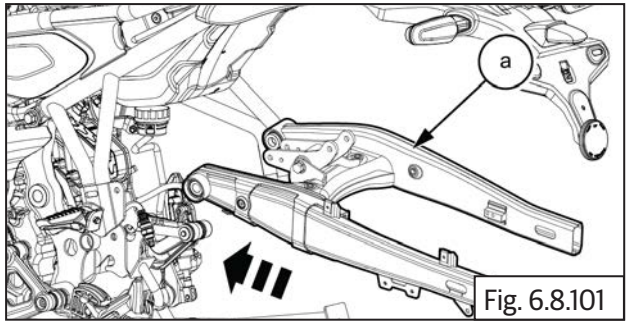

Fig. 6.8.101

- Install the spindle **(a)** along with thrust washer **(b)** into LH side.

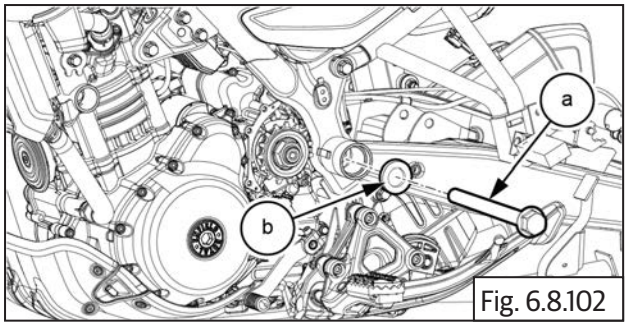

Fig. 6.8.102

- Locate spindle bolt **(M16) (a)** into frame LH side and tighten hex U nut **(M16) (b)** into RH side frame.

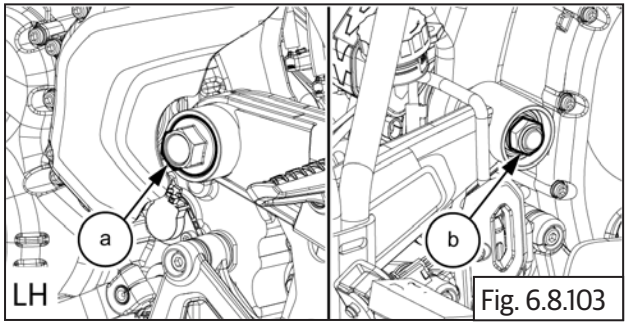

Fig. 6.8.103

	22 mm Socket with Ratchet 24 mm Socket with Ratchet
Torque	100 N-m / 10.0 kgf-m

- Locate cap cover **(a)** over LHS & RHS swing arm. Gently press to install.

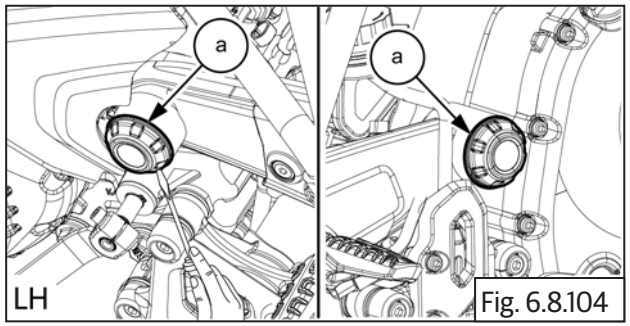

Fig. 6.8.104

- Locate and tighten 1 No. Hex head bolt **(M10) (a)** with U nut **(b)** into link rod.

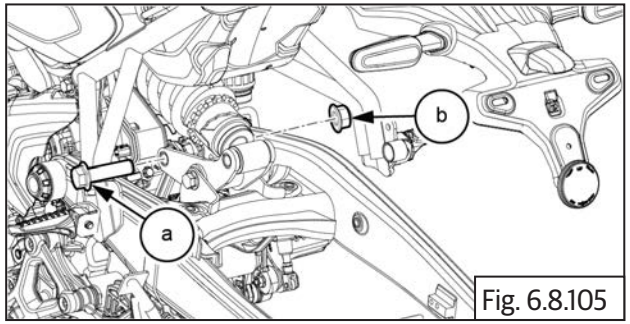

Fig. 6.8.105

	14 mm Socket with Ratchet 17 mm Double end spanner
Torque	70 N-m / 7.0 kgf-m

- Locate and tighten 1 No. Hex head bolt **(M10) (a)** with U nut **(b)** into rocker assembly.

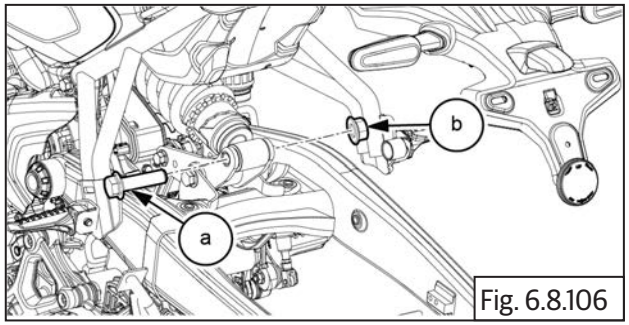

Fig. 6.8.106

	14 mm Socket with Ratchet 17 mm Double end spanner
Torque	60 N-m / 6.0 kgf-m

- Install drive chain **(a)** into the sprocket.

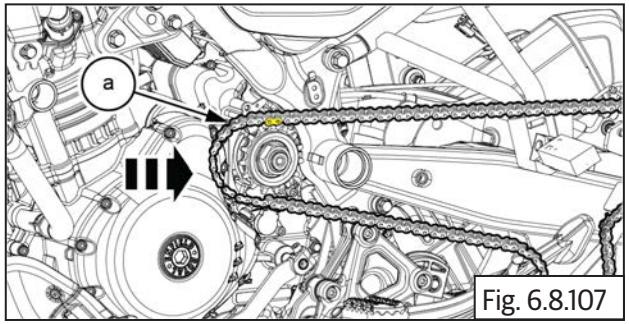

Fig. 6.8.107

NOTE
• **Ensure** the chain mark.

- Install the chain sprocket cover **(a)** into engine.

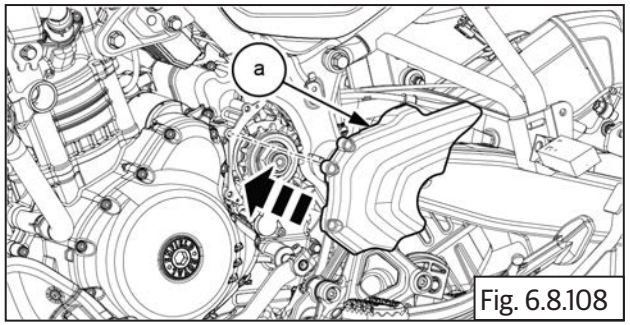

Fig. 6.8.108

- Locate and tighten 3 Nos. cap bolts **(a)** on chain sprocket cover.

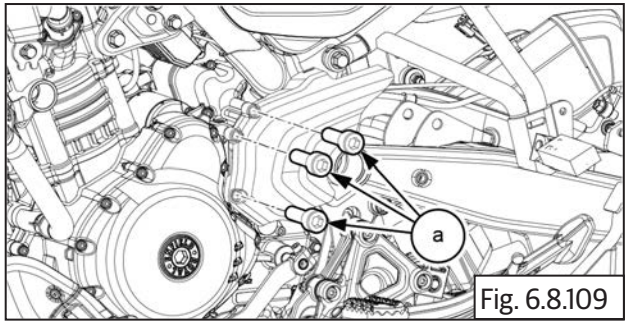

Fig. 6.8.109

	5 mm Allen Socket with Ratchet
Torque	10N-m to 12 N-m / 1.0 to 1.2 kgf-m

6.8.3.14. Mud Flap

- Install the hugger assembly **(a)** on swing arm.

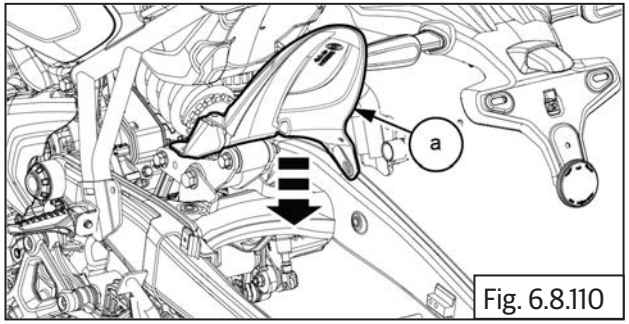

Fig. 6.8.110

- Locate and tighten the 3 Nos. button head bolts **(M6) (a)** on hugger assembly.

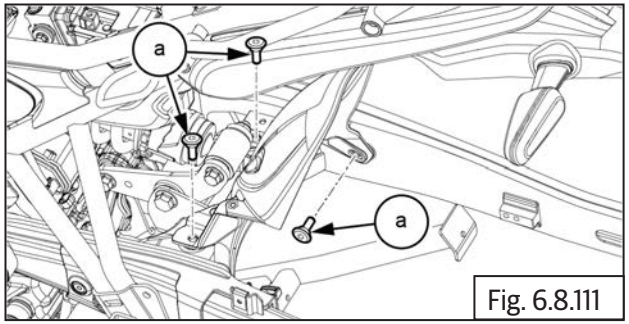

Fig. 6.8.111

	5 mm Allen Socket with Ratchet
Torque	10 N-m / 1.0 kgf-m

- Press and fix corrugated conduct clip **(a)** on hugger assembly.

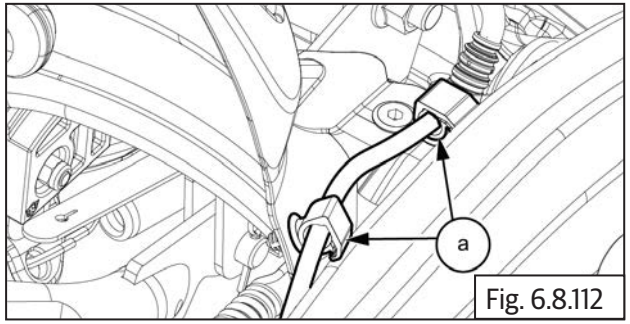

Fig. 6.8.112

6.8.3.15. Chain Guard Upper

- Locate chain guard upper **(a)** on the LH side and align mounting holes.

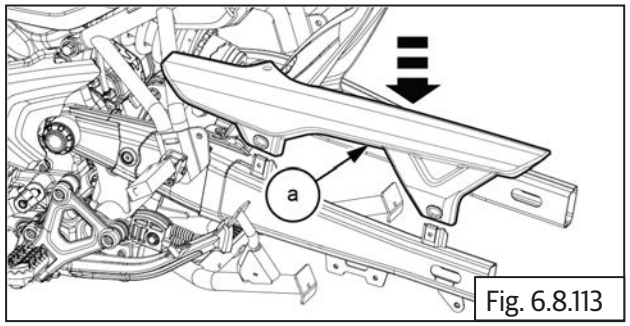

Fig. 6.8.113

- Locate and tighten 1 No. button head bolt **(M6) (a)** from chain guard top.

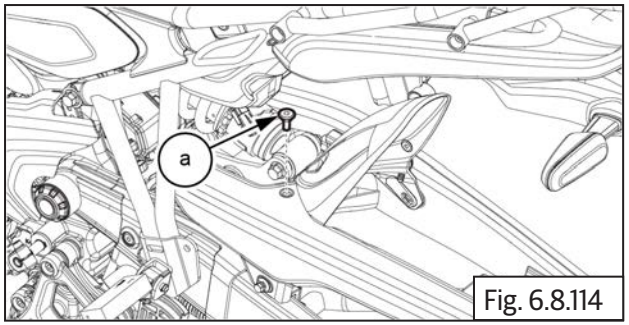

Fig. 6.8.114

	5 mm Allen Socket with Ratchet
Torque	10 N-m /1.0 kgf-m

- Locate and tighten 1 No. cap bolt **(M6) (a)** on chain guard upper.

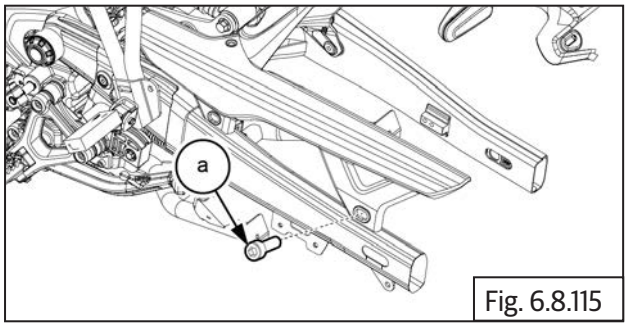

Fig. 6.8.115

	5 mm Allen Socket with Ratchet
Torque	10 N-m / 1.0 kgf-m

- Locate and tighten 1 No. hex bolt **(M6) (a)** along with washer **(b)** on chain guard upper.

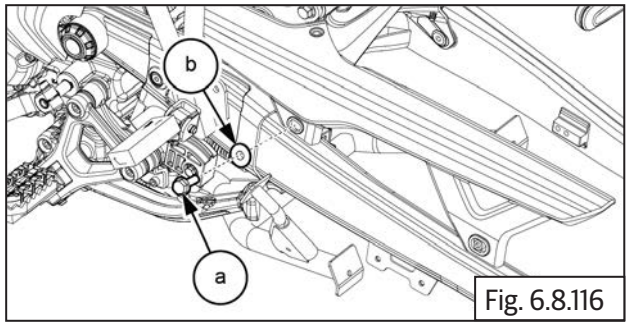

Fig. 6.8.116

	10 mm Socket with Ratchet
Torque	10 N-m /1.0 kgf-m

6.8.3.16. Chain guard lower

- Locate bracket **(a)** on the LH side and align mounting holes.

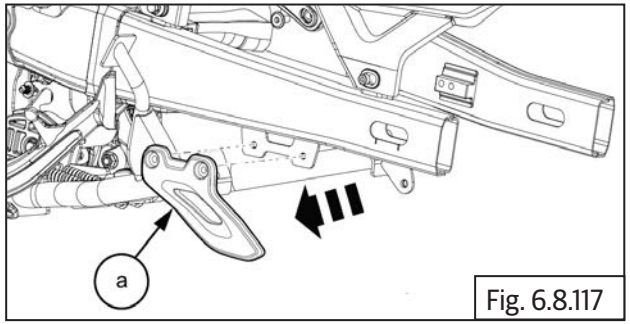

Fig. 6.8.117

- Locate and tighten 2 Nos. cap bolts **(M6) (a)** from swing arm LH.

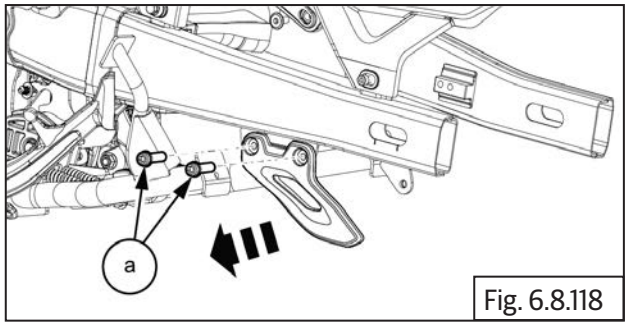

Fig. 6.8.118

	5 mm Allen Socket with Ratchet
Torque	10 N-m / 1.0 kgf-m

6.8.4. Bottom Roller Bearing into Steering Stem

- Apply 0.5g of grease to the lower headstock bearing.

	NLGI 2 / Mobil XHP 222

- Insert the dust seal and roller bearing **(a)**.

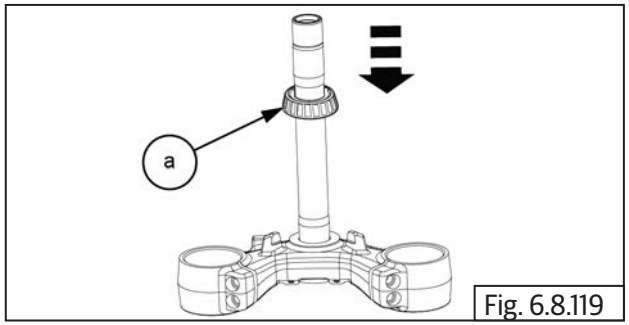

Fig. 6.8.119

- Assemble bearing with special tool **(a)**.

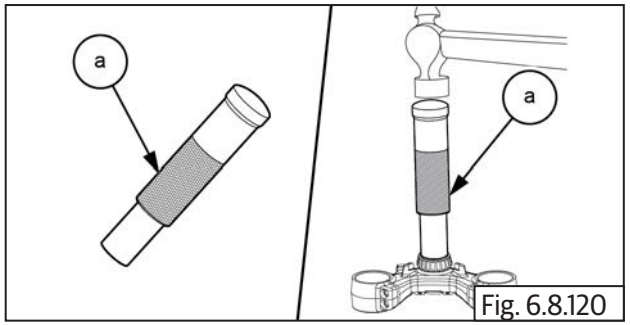

Fig. 6.8.120

SPL	Part No: ST-31893/A
	Part Name: T STEM Taper Roller Bearing Installer

6.8.5. Ball Bearing into Frame top an bottom Head Tube

- Locate bottom bearing outer race **(b)** and top bearing outer race **(a)** into frame headstock tube.

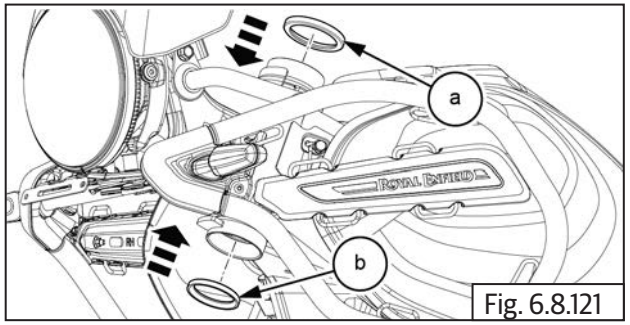

Fig. 6.8.121

- Use bearing race installer tool to install top and bottom bearing races into headstock.

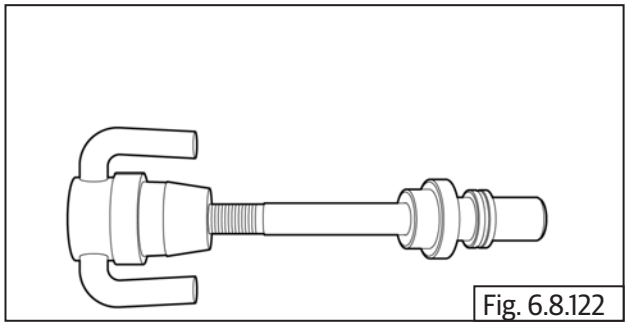

Fig. 6.8.122

SPL	Part No: ST-31894/A Part No: ST-32156/A
	Part Name: Headstock bearing race installer

- Locate the race installer tool **(a)** into headstock top side.

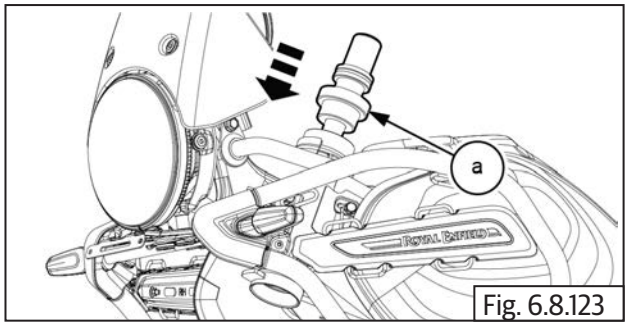

Fig. 6.8.123

SPL	Part No: ST-31894/A Part No: ST-32156/A
	Part Name: Headstock bearing race installer

- Tighten the bottom nut **(a)** to clockwise direction

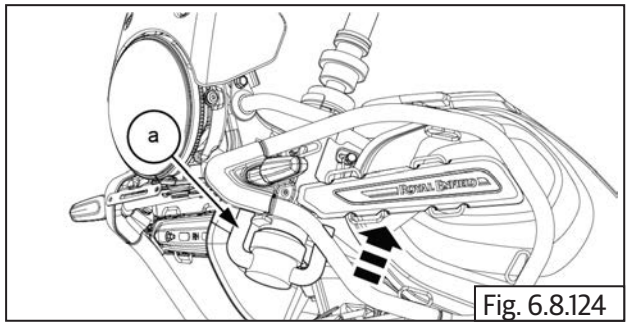

Fig. 6.8.124

SPL	Part No: ST-31894/A Part No: ST-32156/A
	Part Name: Headstock bearing race installer

- Tighten tool head **(a)** using T rod till bearing race perfectly seat.

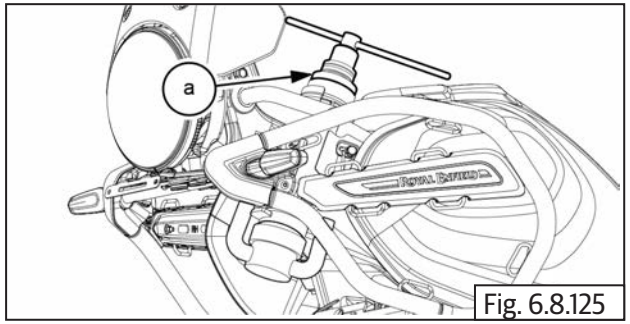

Fig. 6.8.125

SPL	Part No: ST-31894/A Part No: ST-32156/A
	Part Name: Headstock bearing race installer

- Remove the installer tool (a) from the headstock.

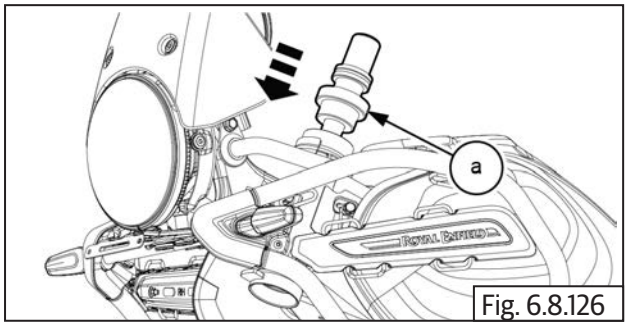

Fig. 6.8.126

SPL	Part No: ST-31894/A Part No: ST-32156/A
	Part Name: Headstock bearing race installer

- Apply 0.5g of grease to the upper headstock bearing.
- install bearing **(a)** into frame top head tube top **(b)**.

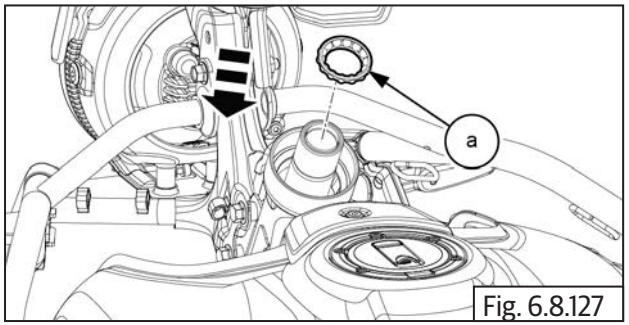

Fig. 6.8.127

	NLGI 2 / Mobil XHP 222

6.8.6. Steering Stem Assembly into Frame Head Tube

- Gently insert steering stem **(a)** into frame head tube bottom .

⚠ CAUTION

DO NOT tap or use force to assembly the steering stem into frame head tube.

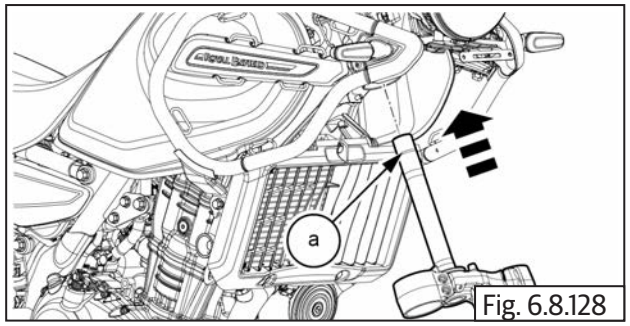

Fig. 6.8.128

- Hold steering stem from bottom and install head stock seal **(a)** into head tube .

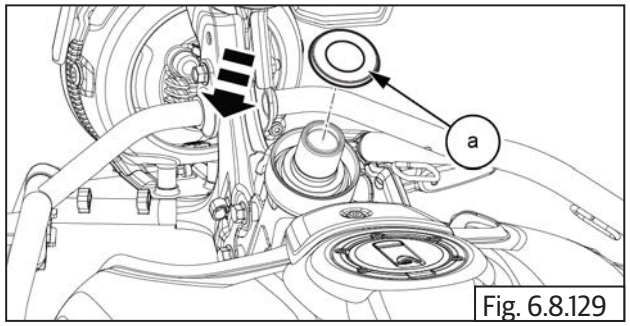

Fig. 6.8.129

- Hold steering stem from bottom and install head stock seal **(a)** into head tube .

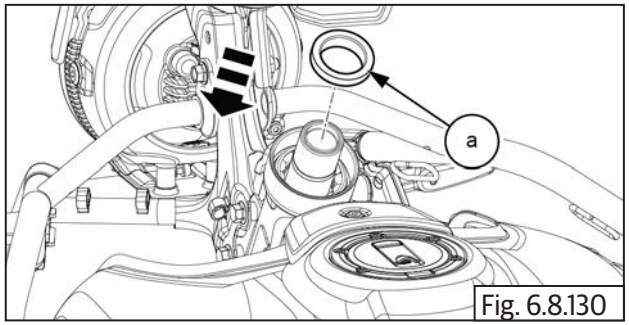

Fig. 6.8.130

- Hold steering stem from bottom and install head stock cover **(a)** into head tube .

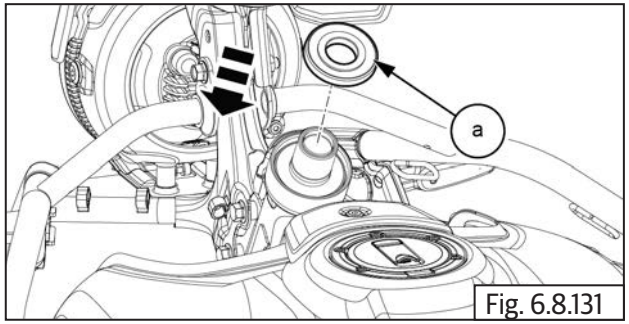

Fig. 6.8.131

⚠ CAUTION

Support steering stem from bottom. DO NOT allow the steering stem to drop out of frame head tube.

- Pre-fit the stem nut **(a)** over the steering stem,do not tighten the stem nut fully.

- Apply **35Nm** torque then immediately loosen the lower lock nut **(a)**.

- Apply **15Nm** torque on lower lock nut **(a)**.

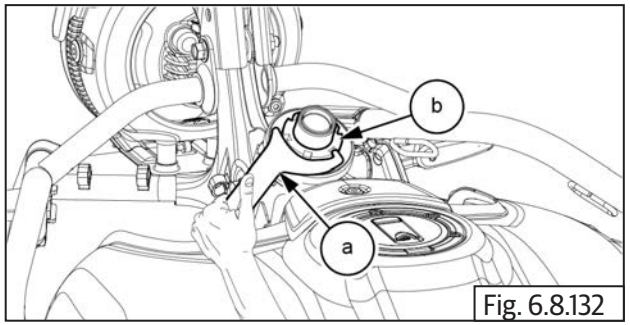

Fig. 6.8.132

SPL	Part No ST-30969/A
	Part Name: Steering stem nut adjuster

- Install spacer rubber **(a)** over the lower lock nut,

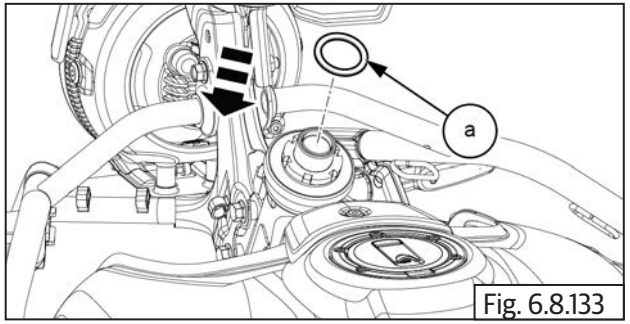

Fig. 6.8.133

- Locate and tighten upper lock nut **(a)** on steering stem.

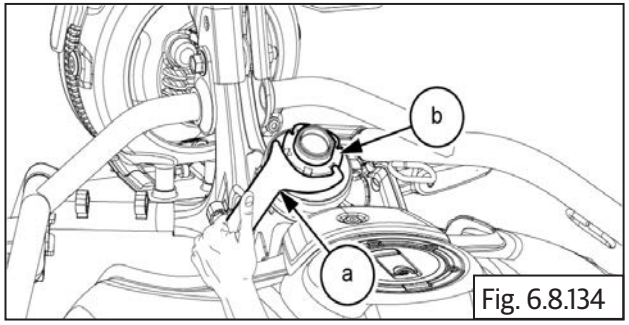

Fig. 6.8.134

SPL	Part No ST-30969/A
	Part Name: Steering stem nut adjuster

	1 Nm /0.1 Kgf-m

- Install tabbed washer **(a)** over the upper lock nut .

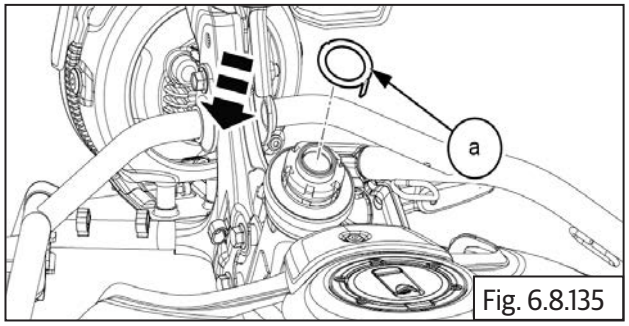

Fig. 6.8.135

- Install the following parts:
  - Front wheel.
  - Fix brake hose and wheel speed sensor wires from the clips.
  - Wheel caliper on fork end LH. Support caliper suitably.
  - Wheel speed sensor on the fork end LH. Support wheel speed sensor suitably
  - Front mudguard.
  - Aggregates of Handlebar
  - Handlebar.
  - Upper Yoke.

6.9 FRONT SUBFRAME

CONTENTS PAGE

6.9. Front Sub Frame..... 372

Dismantling..... 374

6.9.1 Side Bar LH..... 374

6.9.2 Ornamented cover LH..... 375

6.9.3 Side Bar RH..... 375

6.9.4 Ornamented cover RH..... 377

6.9.5 Wind Screen..... 377

6.9.6 Head Lamp..... 378

6.9.7 Cluster..... 379

6.9.8. Sub Frame 380

Assembly 380

6.9.9. Sub Frame 380

6.9.10 Cluster..... 381

6.9.11 Head Lamp..... 382

6.9.12 Wind Screen..... 383

6.9.13 Ornamented cover RH..... 384

6.9.14 Side Bar RH..... 384

6.9.15 Ornamented cover LH..... 386

6.9.16 Side Bar LH..... 386

6.9. Front Sub Frame

Dismantling

⚠ CAUTION
Ensure the motorcycle is upright on a firm and flat surface.

- Ensure ignition and stop switch are in off position.
- Disconnect the battery terminal.

6.9.1 Side Bar LH

- Remove the retainer clip **(a)** from trafficator LH.

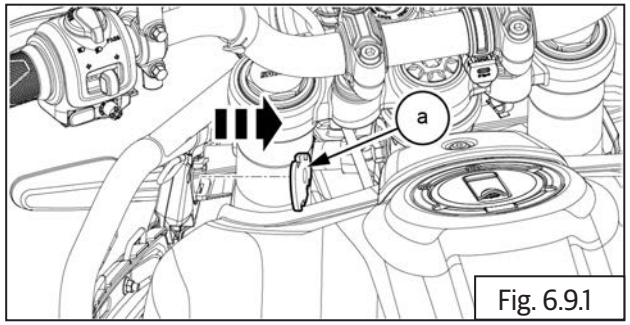

Fig. 6.9.1

- Disconnect the trafficator coupler**(a)** .

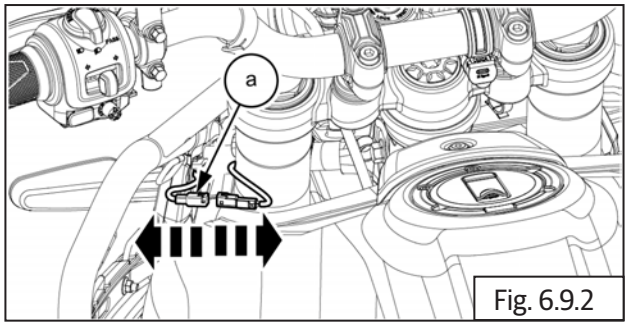

Fig. 6.9.2

- Gently Pull out and remove the front trafficator LH **(a)**.

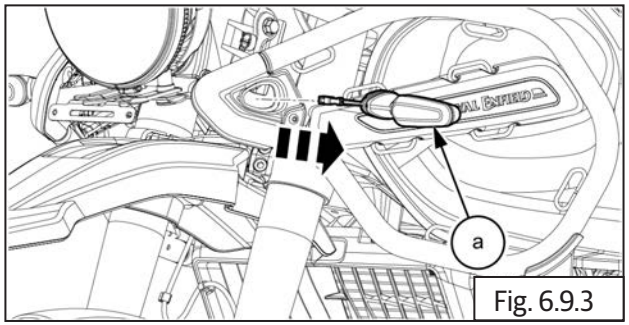

Fig. 6.9.3

- Loosen and remove the button head bolt **(M5) (a)**from front LH cover outer.

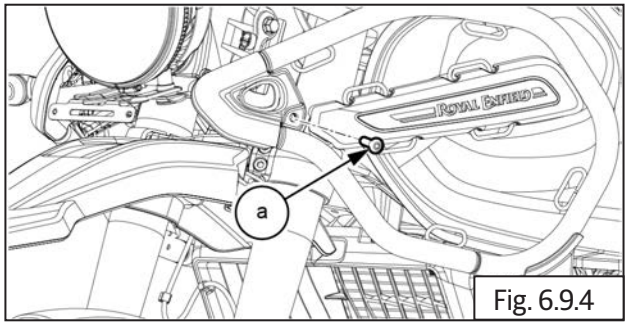

Fig. 6.9.4

	3mm Allen socket with ratchet

- Remove the outer cover **(a)** from LH side bar.

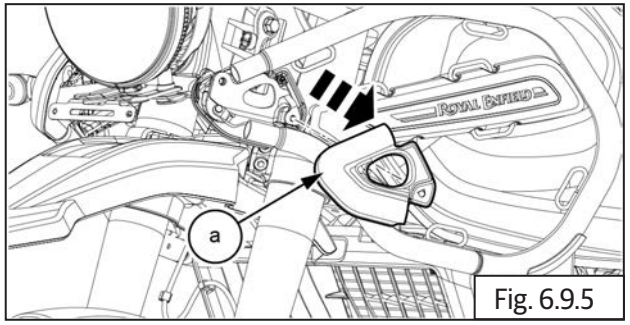

Fig. 6.9.5

- Loosen and remove the button head bolt **(M6) (a)** from LH inner cover.

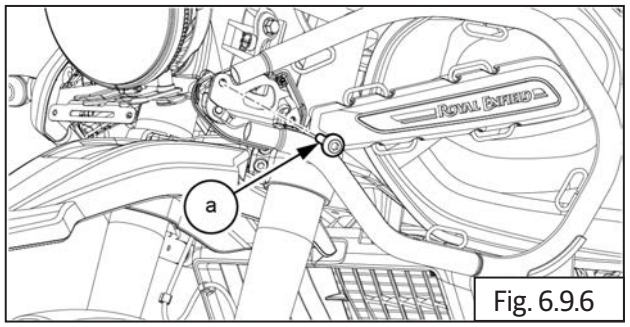

Fig. 6.9.6

	5mm Allen socket with ratchet

- Loosen and remove the hex head bolt **(M8) (a)** with nut **(b)** from top bracket

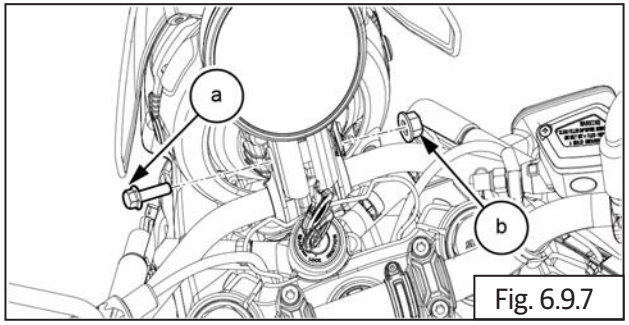

Fig. 6.9.7

	12mm socket with ratchet

- Loosen and remove the hex head bolt **(M8) (a)** with nut **(b)**.

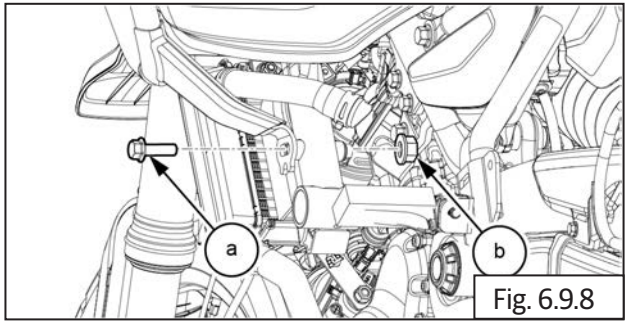

Fig. 6.9.8

	12mm socket with ratchet

- Remove the LH side bar **(a)**.

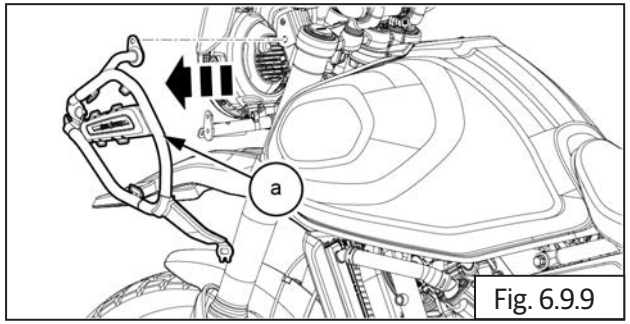

Fig. 6.9.9

- Remove inner cover LH **(a)** .

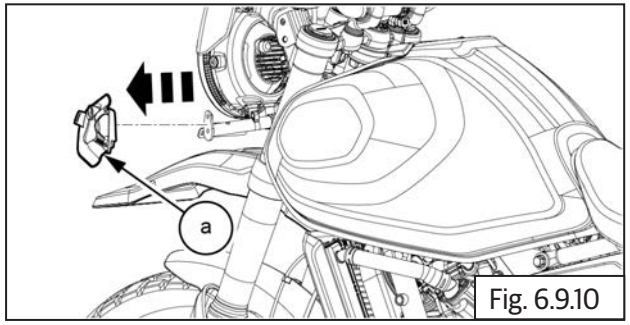

Fig. 6.9.10

6.9.2 Ornamented cover LH

- Loosen and remove the **2 Nos** hex nuts **(M5) (a)** from ornamented cover LH.

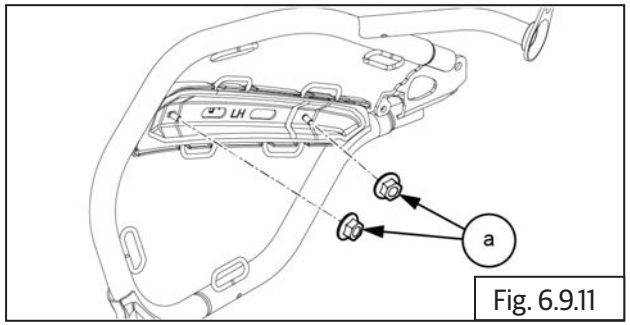

Fig. 6.9.11

	8mm socket with ratchet

- Remove the ornamented cover LH **(a)** .

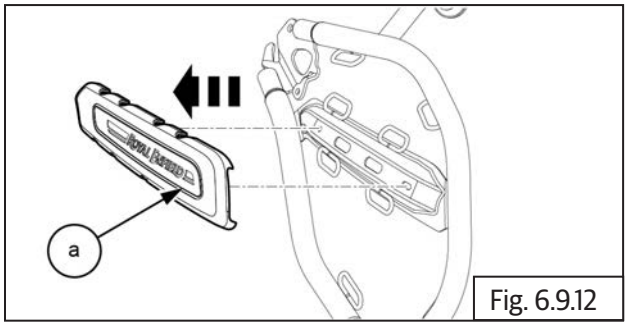

Fig. 6.9.12

6.9.3 Side Bar RH

- Remove the retainer clip **(a)** from trafficator RH.

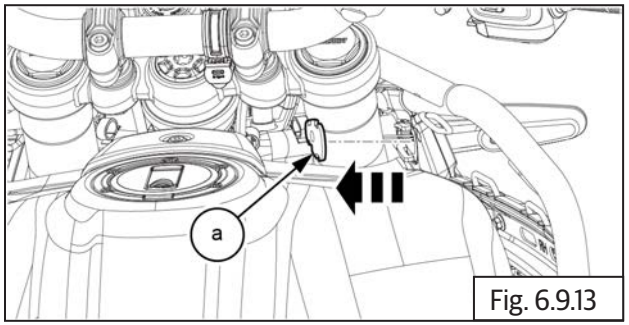

Fig. 6.9.13

	Screw Driver

- Disconnect electrical coupler **(a)** .

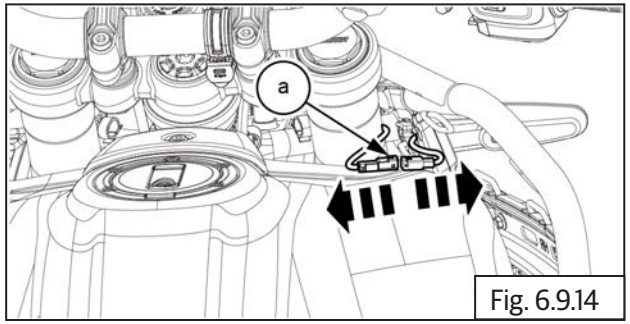

Fig. 6.9.14

- Gently Pull out and remove front trafficator RH **(a)** from RH side bar.

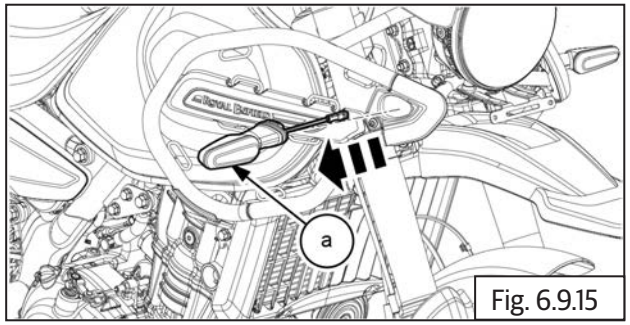

Fig. 6.9.15

- Loosen and remove the button head bolt**1 No (M5) (a)** from RH outer cover.

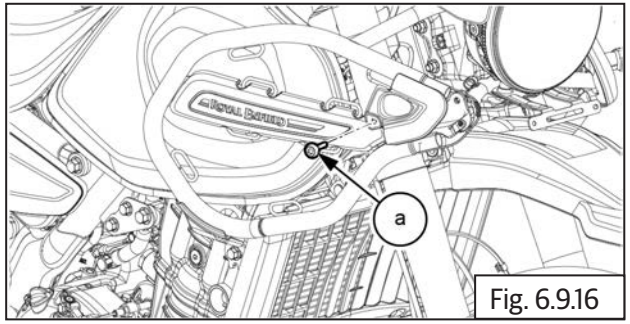

Fig. 6.9.16

	3mm Allen socket with ratchet

- Remove cover outer RH **(a)** from RH side bar.

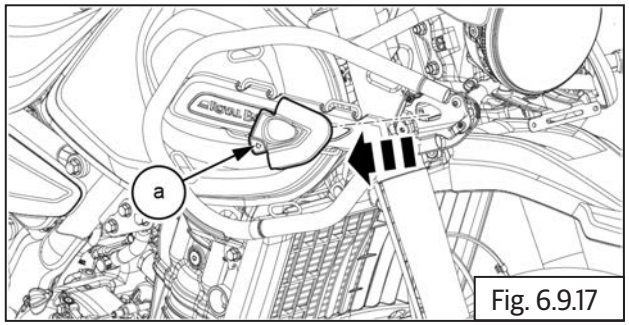

Fig. 6.9.17

- Loosen and remove the button head bolt **(M6) (a)** from RH inner cover.

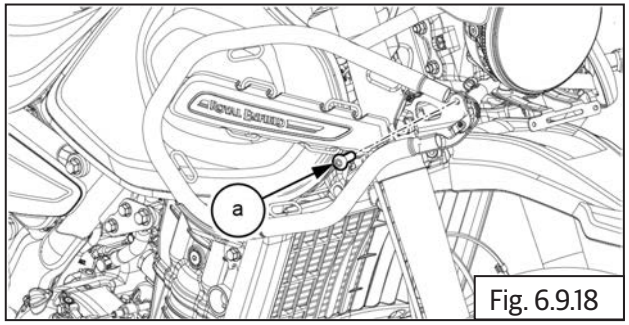

Fig. 6.9.18

	5mm Allen socket with ratchet

- Loosen and remove the hex head bolt **(M8) (a)** with nut **(b)** from top bracket.

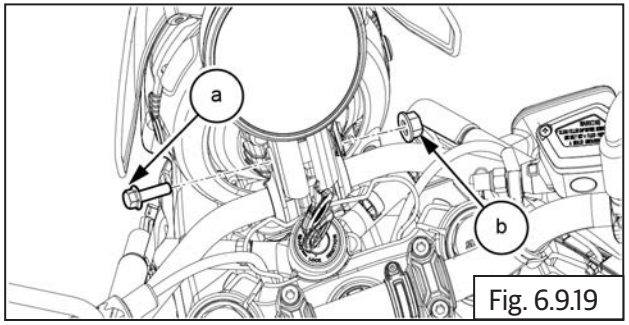

Fig. 6.9.19

	12mm socket with ratchet

- Loosen and remove the hex head bolt **(M8) (a)** with nut **(b)**.

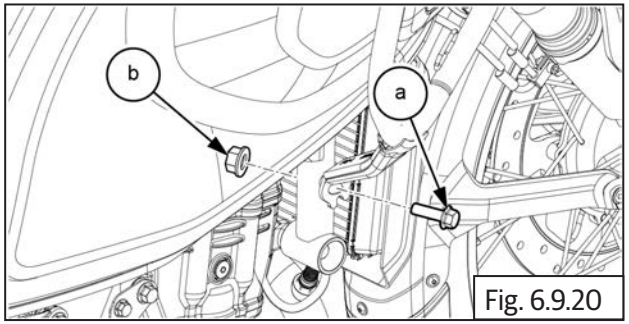

Fig. 6.9.20

	12mm socket with ratchet

- Remove the RH side bar **(a)** .

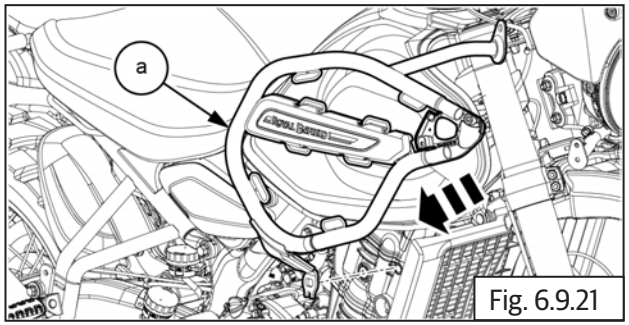

Fig. 6.9.21

- Remove inner cover RH **(a)** from sub frame.

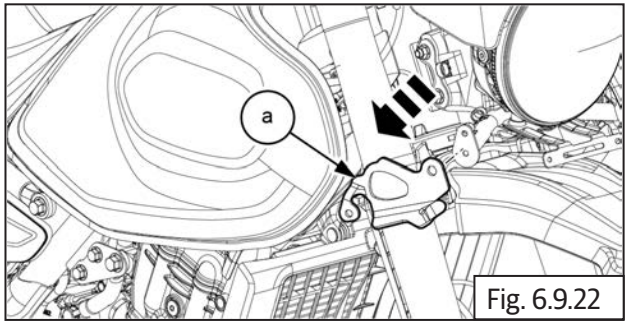

Fig. 6.9.22

6.9.4 Ornamented cover RH

- Loosen and remove the **2 Nos** hex nuts **(M6) (a)** from ornamented cover RH.

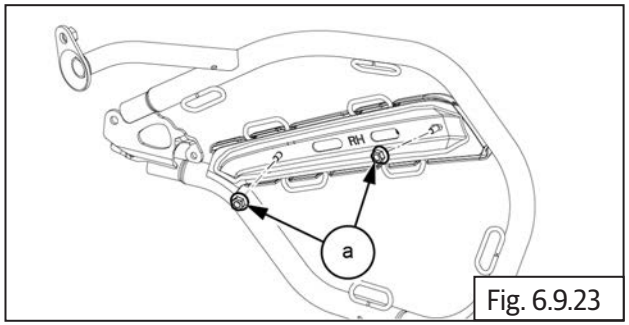

Fig. 6.9.23

	8mm socket with ratchet

- Remove the ornamented cover RH **(a)** from sub frame RH.

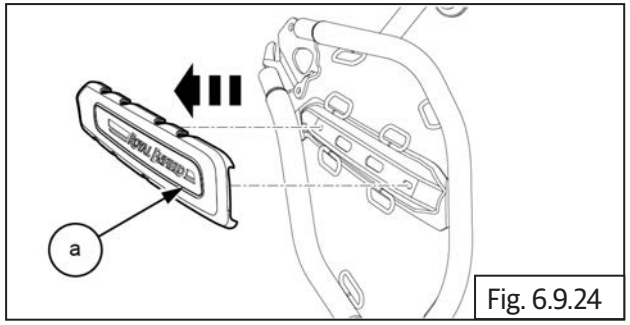

Fig. 6.9.24

6.9.5 Wind Screen

- Loosen and remove **4 Nos** button head screws **(M6) (a)** from wind screen.

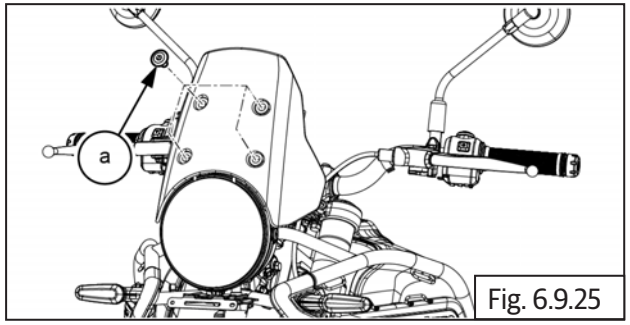

Fig. 6.9.25

	5mm Allen socket with ratchet

- Remove wind screen **(a)** from wind screen mount.

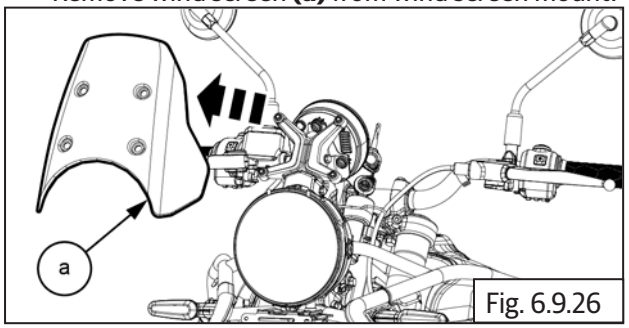

Fig. 6.9.26

- Remove **4 Nos** rubber grommet **(a)** from wind screen.

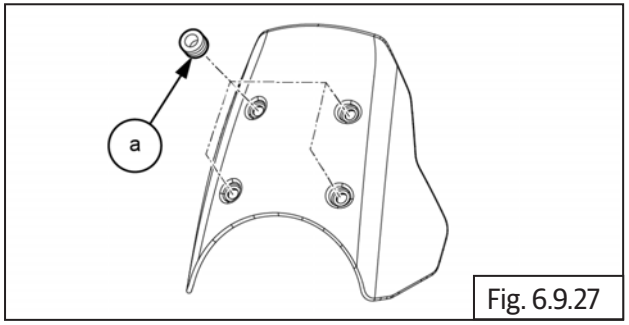

Fig. 6.9.27

- Loosen and remove **4 Nos** hex head bolts **(M6) (a)** from wind screen mount.

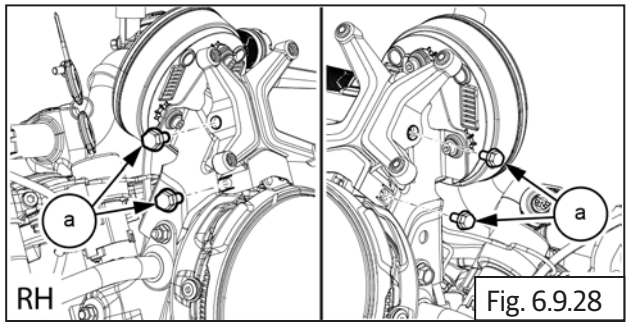

Fig. 6.9.28

	12mm socket with ratchet

- Remove wind screen mount **(a)** from top bracket.

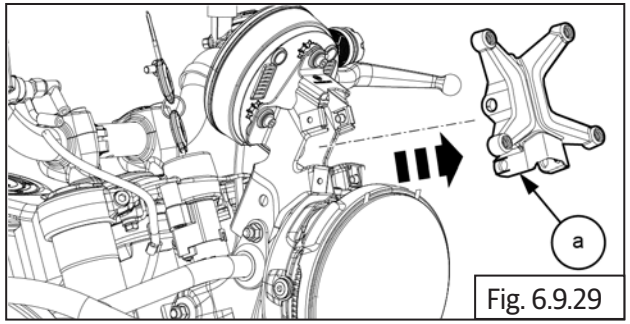

Fig. 6.9.29

6.9.6 Headlamp

- Loosen and remove **2 Nos** button head screws **(M6) (a)** with washers **(b)** from name plate bracket.

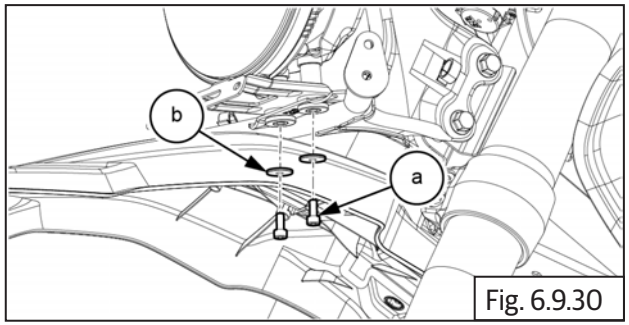

Fig. 6.9.30

	5mm Allen socket with ratchet

- Remove name plate bracket **(a)** along with washers **(b)** from head lamp bracket.

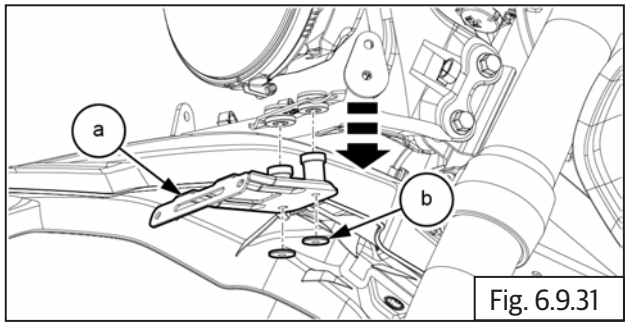

Fig. 6.9.31

- Remove **2 Nos** sleeve **(a)** and grommet **(b)** from head lamp bracket.

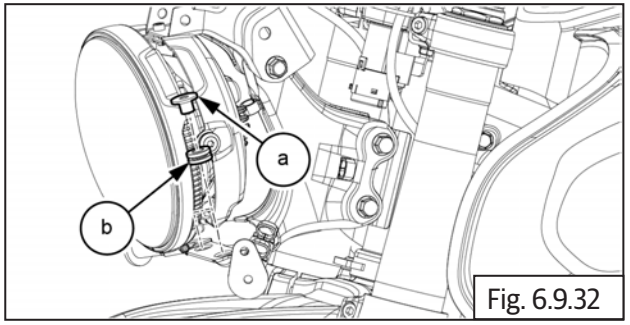

Fig. 6.9.32

- Loosen and remove **2 Nos** button head screws **(M6) (a)** with washers **(b)** from headlamp bracket.

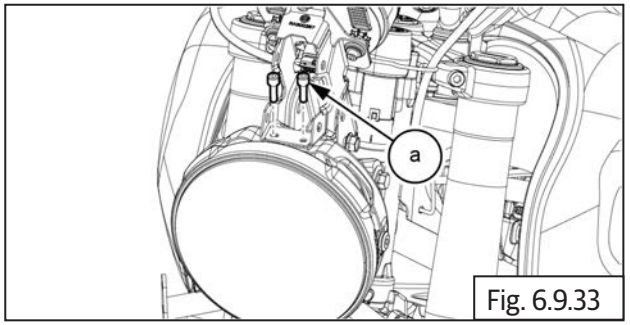

Fig. 6.9.33

	5mm Allen socket with ratchet

- Disconnect the headlamp coupler **(a)** from head lamp.

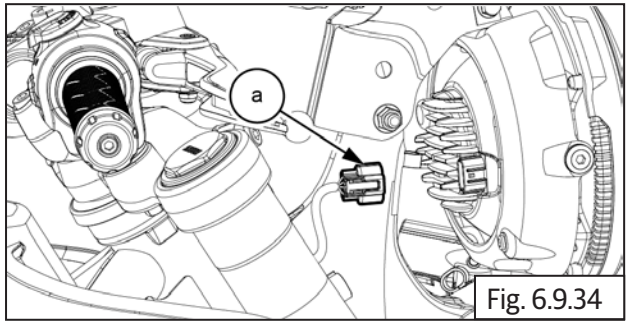

Fig. 6.9.34

- Remove the head lamp **(a)** from head lamp bracket.

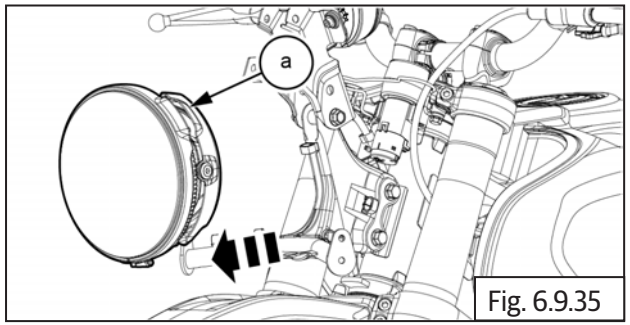

Fig. 6.9.35

6.9.7 Cluster

- Loosen and remove **3 Nos** button head screws **(M6) (a)** from cluster.

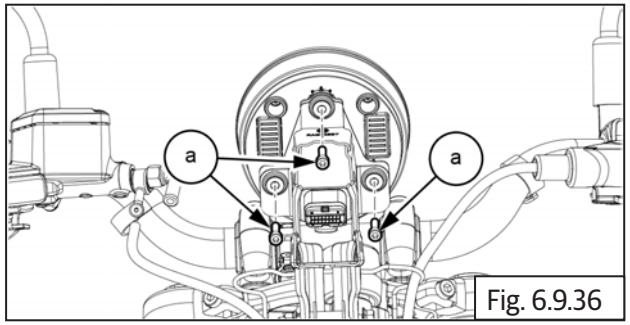

Fig. 6.9.36

	4mm Allen socket with ratchet

- Disconnect the cluster coupler **(a)**.

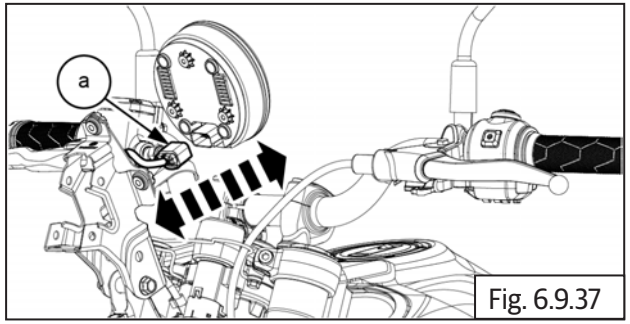

Fig. 6.9.37

- Remove the cluster **(a)** from top bracket.

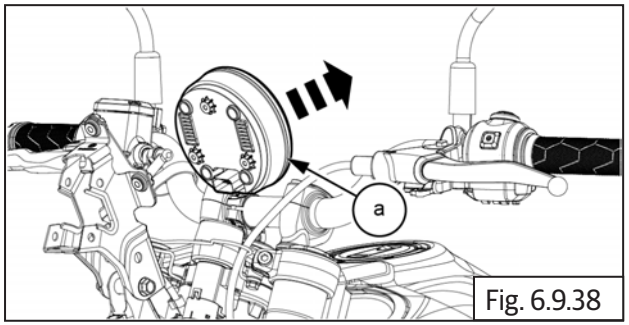

Fig. 6.9.38

- Remove **3 Nos** sleeve **(a)** and rubber grommet **(b)** from top bracket.

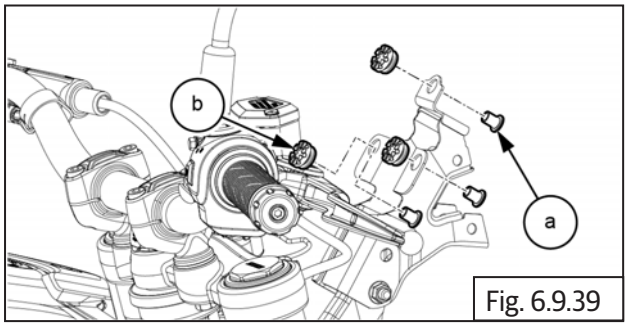

Fig. 6.9.39

- Remove **4 Nos** clip nuts **(a)** from head lamp top bracket.

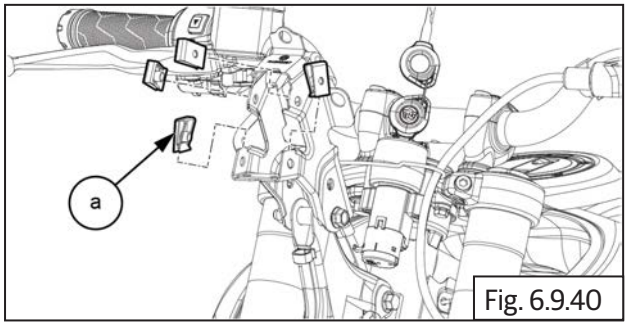

Fig. 6.9.40

- Loosen and remove **1 No** hex head bolt **(M8) (a)** with nut **(b)** from top bracket.

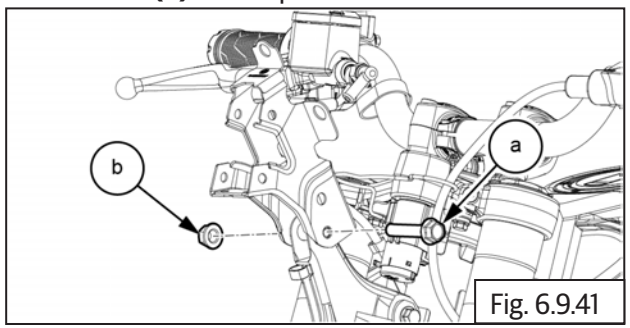

Fig. 6.9.41

	12mm socket with ratchet

6.9.8 Sub Frame

- Remove the head lamp top bracket **(a)** from sub frame..

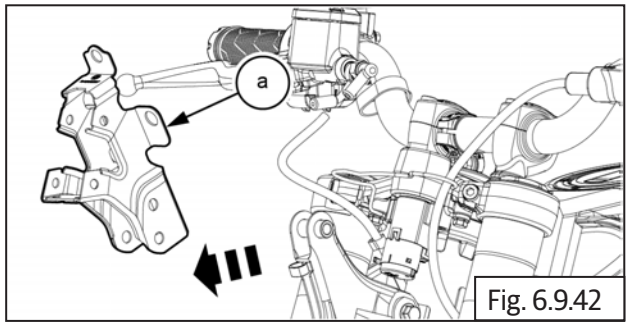

Fig. 6.9.42

- Disconnect omega clips **(a)** from sub frame.

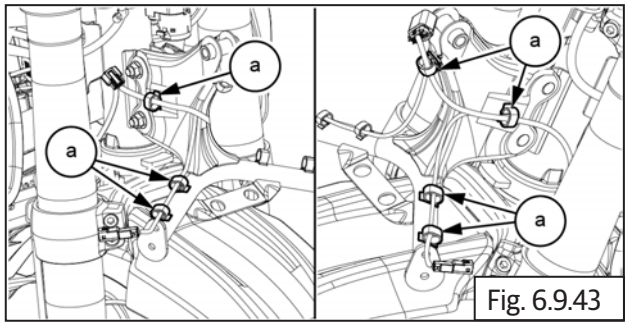

Fig. 6.9.43

- Loosen and remove **2 Nos** hex head bolt **(M8) (a)** with nut **(b)** from sub frame.

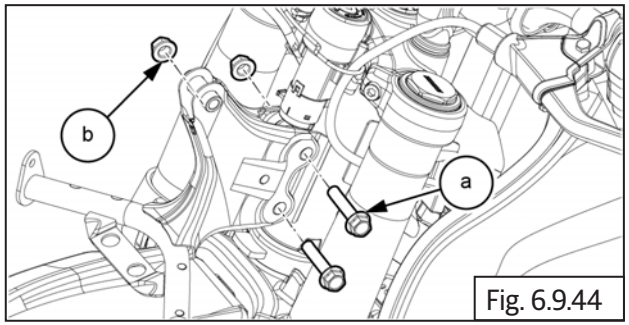

Fig. 6.9.44

	12mm socket with ratchet

- Remove the front subframe **(a)**.

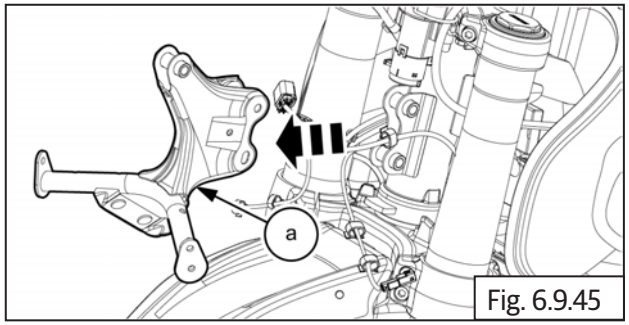

Fig. 6.9.45

Assembly

⚠ CAUTION
Ensure the motorcycle is upright on a firm and flat surface.

6.9.9 Sub Frame

- Position front subframe **(a)** on frame and ensure mounting holes are aligned properly.

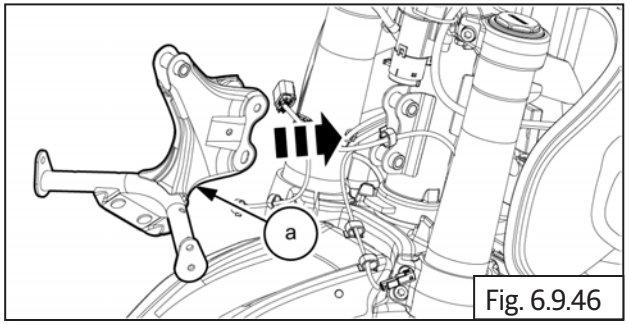

Fig. 6.9.46

- Locate and tighten **2 Nos** hex head bolt **(M8) (a)** with nut **(b)** into front sub frame.

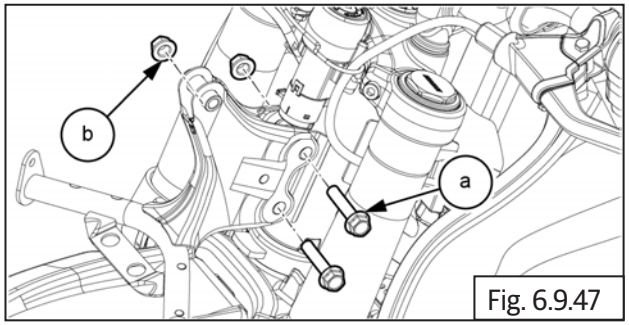

Fig. 6.9.47

	12mm socket with ratchet
Torque	25N-m / 2.5 kgf-m

- Connect omega clips **(a)**on front frame.

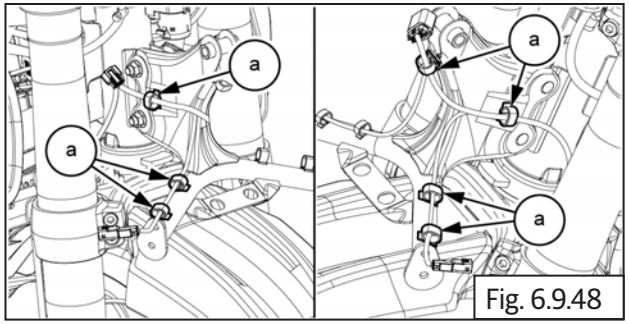

Fig. 6.9.48

- Locate top head lamp bracket **(a)** on front sub frame.

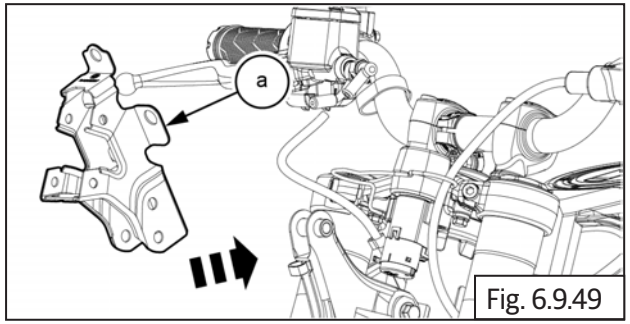

Fig. 6.9.49

- Locate and tighten hex head bolt **(M8) (a)** with nut **(b)** into top bracket.

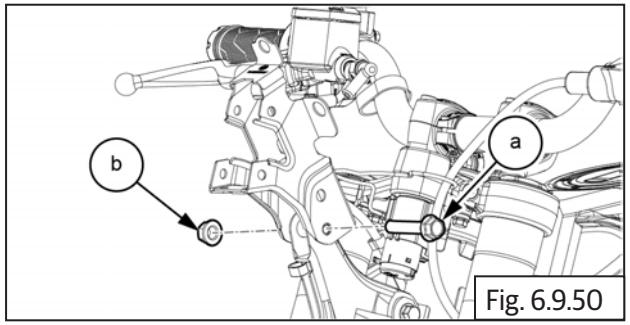

Fig. 6.9.50

	12mm socket with ratchet
Torque	25N-m / 2.5 kgf-m

- Insert the **4 Nos** clip nuts **(a)** on head lamp top bracket.

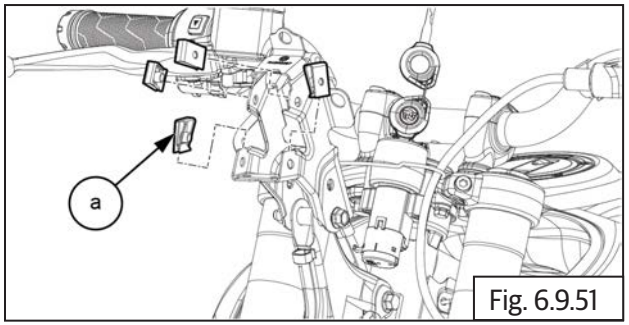

Fig. 6.9.51

6.9.10 Cluster

- Locate **3 Nos** sleeve **(a)** and rubber grommet **(b)** into top head lamp bracket.

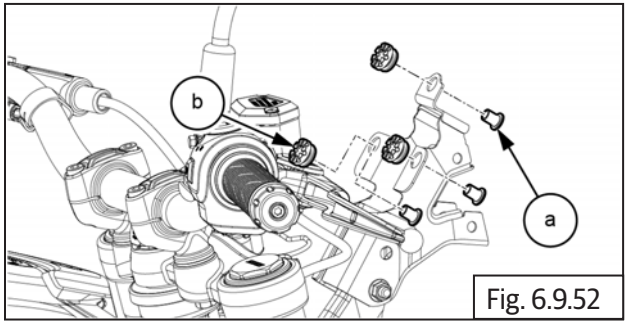

Fig. 6.9.52

- Connect the cluster coupler **(a)**.

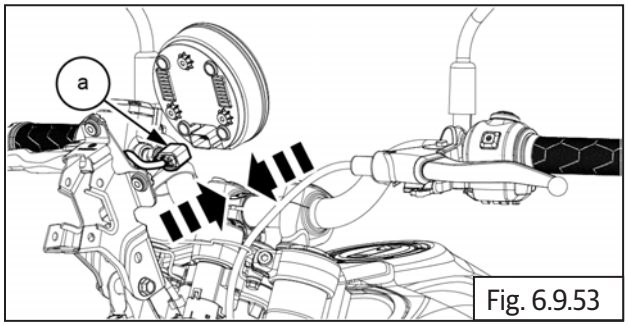

Fig. 6.9.53

- Locate the cluster **(a)** on top bracket.

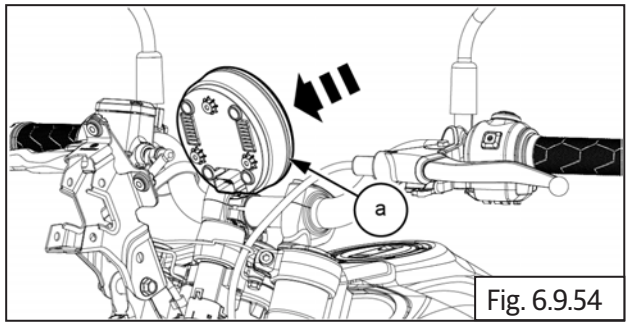

Fig. 6.9.54

- Locate and tighten **3 Nos** button head screws **(M6)** **(a)** on cluster.

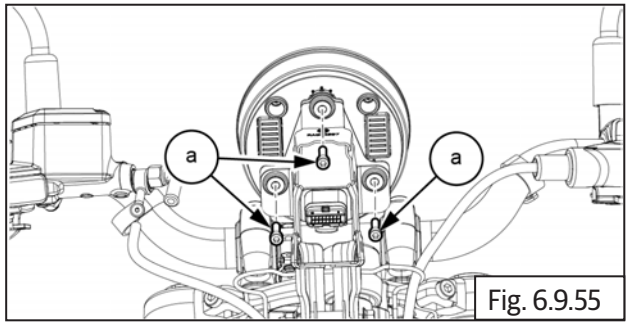

Fig. 6.9.55

	4mm Allen socket with ratchet
Torque	5 N-m / 0.5 kgf-m

6.9.11 Headlamp

- Locate the head lamp **(a)** into head lamp bracket.

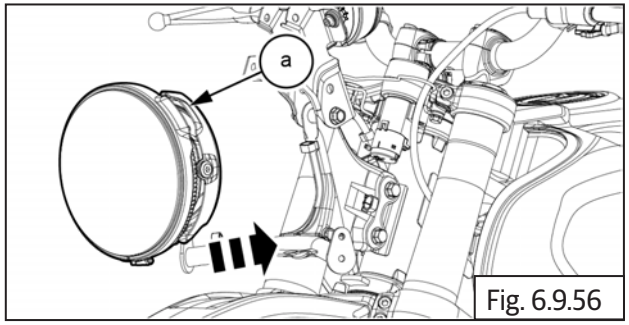

Fig. 6.9.56

- Locate and tighten **2 Nos** button head screws **(M6)** **(a)** with washers **(b)** into headlamp bracket.

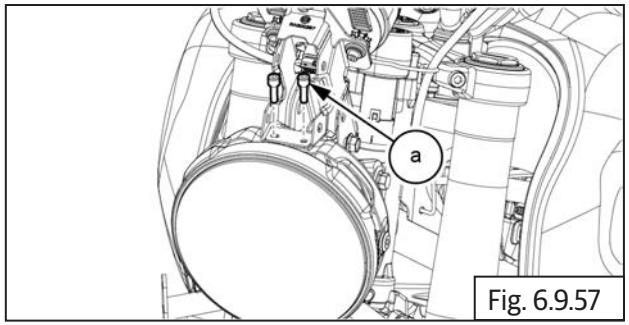

Fig. 6.9.57

	5mm Allen socket with ratchet
Torque	5 N-m / 0.5 kgf-m

- Connect the headlamp coupler **(a)**.

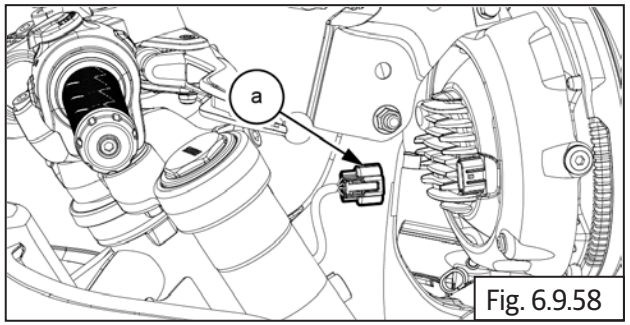

Fig. 6.9.58

- Locate and insert **2 Nos** sleeve **(a)** and grommet **(b)** into head lamp bracket.

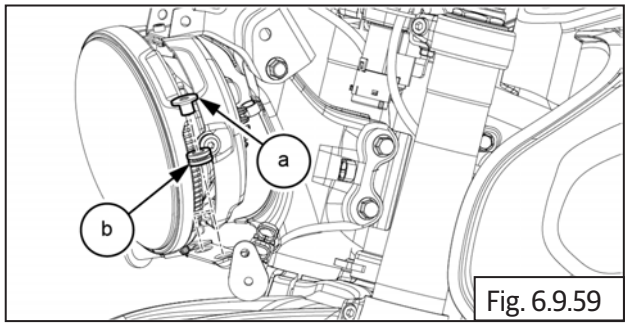

Fig. 6.9.59

- Locate and insert name plate bracket **(a)** along with washers **(b)** on head lamp bracket.

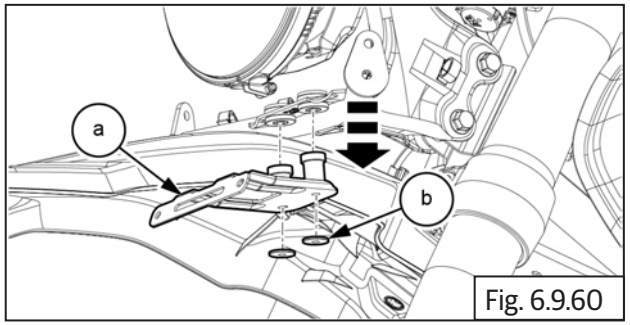

Fig. 6.9.60

- Locate and tighten **2 Nos** button head screws **(M6) (a)** with washers **(b)** into name plate bracket.

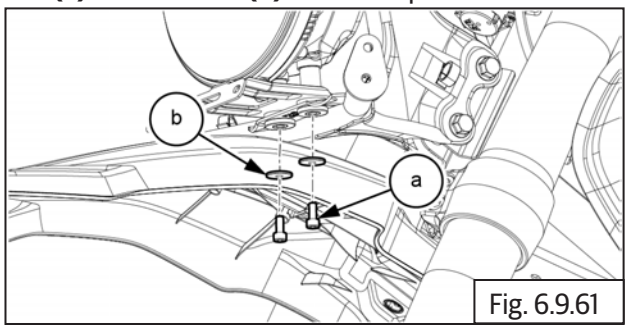

Fig. 6.9.61

	5mm Allen socket with ratchet
Torque	5 N-m / 0.5 kgf-m

6.9.12Wind Screen

- Locate wind screen mount **(a)** into top bracket.

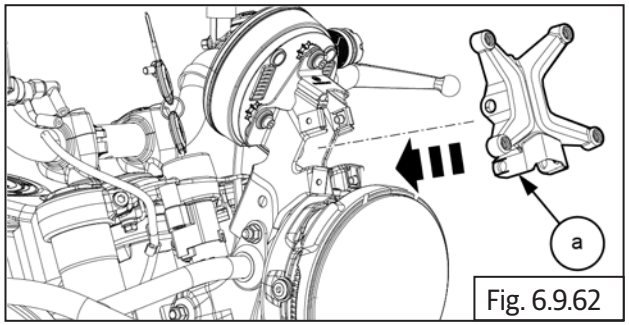

Fig. 6.9.62

- Locate and tighten **4 Nos** hex head bolts **(M6) (a)** into wind screen mount.

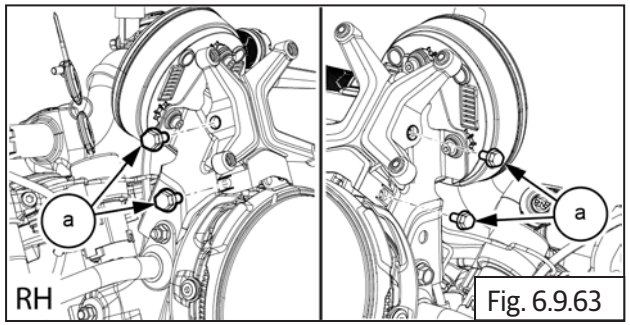

Fig. 6.9.63

	12mm socket with ratchet
Torque	10 N-m / 1.0 kgf-m

- Insert **4 Nos** rubber grommet **(a)** into wind screen.

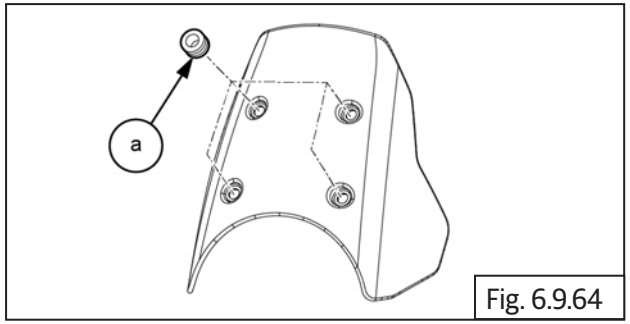

Fig. 6.9.64

- Locate wind screen **(a)** into wind screen mount.

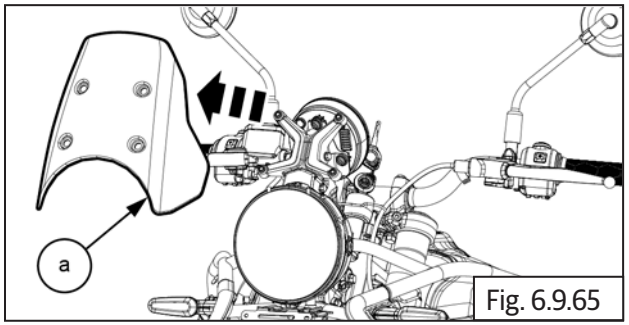

Fig. 6.9.65

- Locate and tighten **4 Nos** button head screws **(M6) (a)** from wind screen.

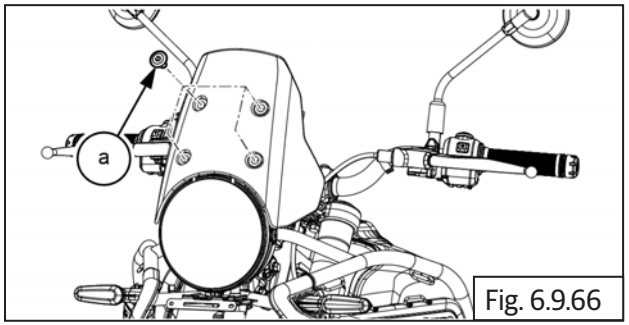

Fig. 6.9.66

	5mm Allen socket with ratchet
Torque	10 N-m / 1.0 kgf-m

6.9.13 Ornamented cover RH

- Insert the ornamented cover RH **(a)** into sub frame RH.

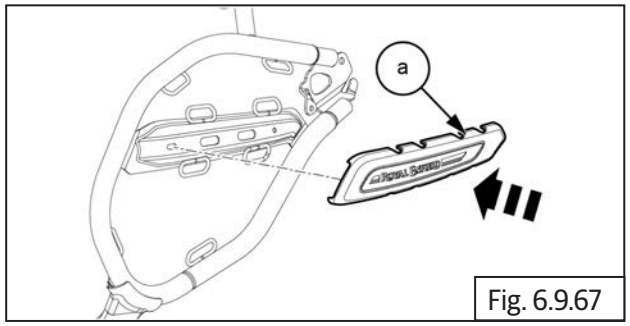

Fig. 6.9.67

- Locate and tighten the **2 Nos** hex nuts **(M6) (a)** into ornamented cover RH.

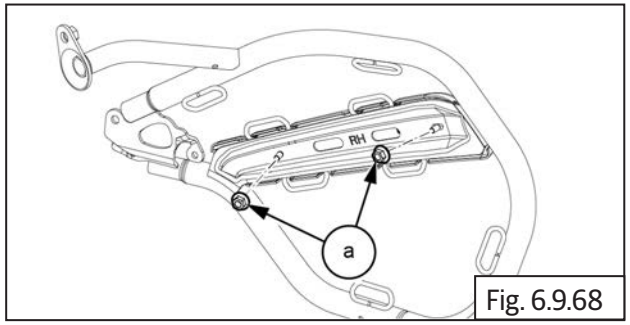

Fig. 6.9.68

	8mm socket with ratchet
Torque	3 N-m / 0.3 kgf-m

6.9.14 Side Bar RH

- Insert inner cover RH **(a)** into sub frame.

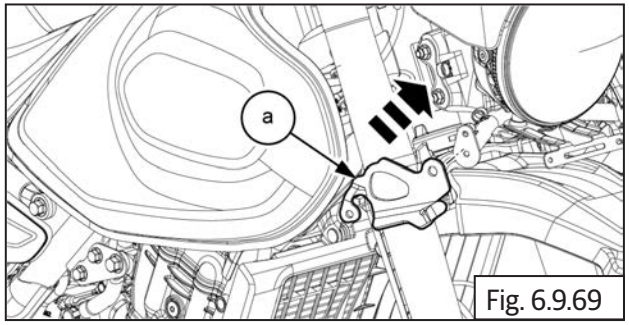

Fig. 6.9.69

- Locate RH side bar **(a)** on vehicle.

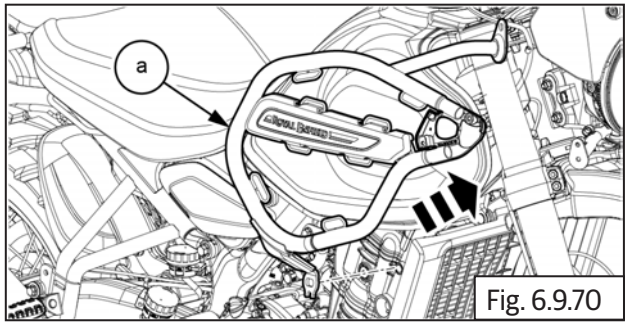

Fig. 6.9.70

- Locate and tighten hex head bolt **1 No (M8) (a)** with nut **(b)**.

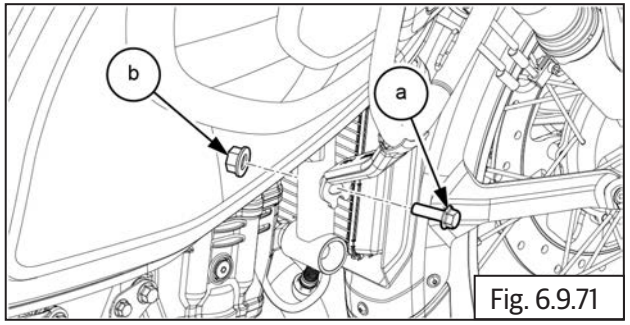

Fig. 6.9.71

	12mm socket with ratchet
Torque	25 N-m / 2.5 kgf-m

- Locate and tighten the hex head bolt **1 No (M8) (a)** with nut **(b)** into top bracket.

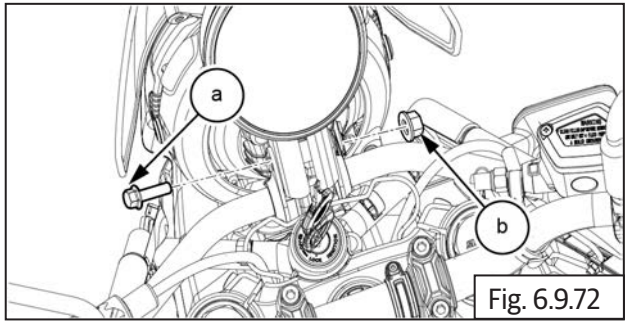

Fig. 6.9.72

	12mm socket with ratchet
Torque	25 N-m / 2.5 kgf-m

- Locate and tighten button head bolt **1 No (M6) (a)** from RH inner cover.

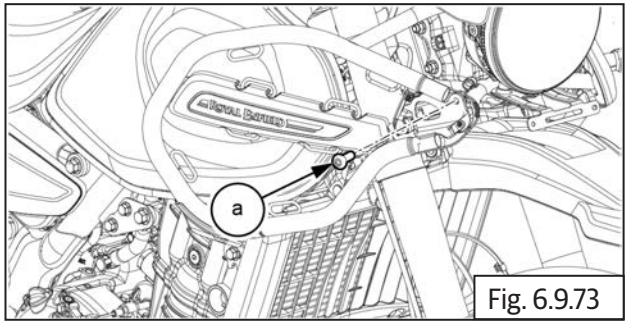

Fig. 6.9.73

	5mm Allen socket with ratchet
Torque	10 N-m / 1.0 kgf-m

- Locate the cover outer RH **(a)** on RH side bar.

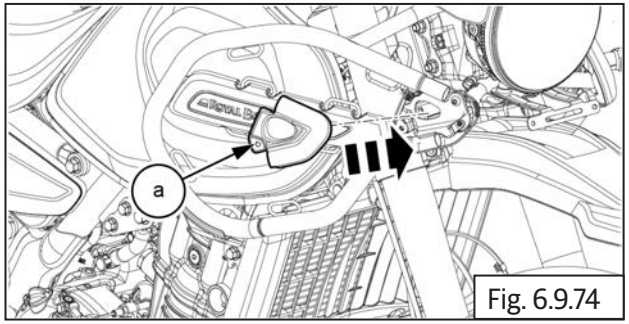

Fig. 6.9.74

- Locate and tighten button head bolt **1 No (M5) (a)** into RH outer cover.

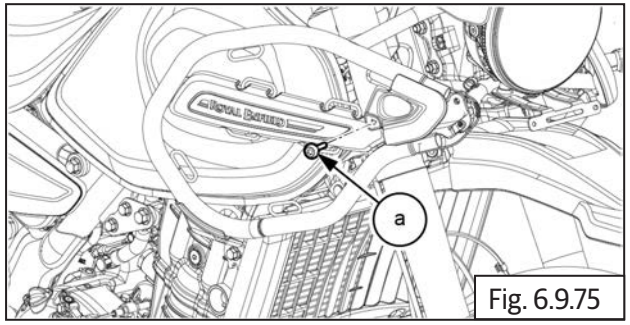

Fig. 6.9.75

	3mm Allen socket with ratchet
Torque	1.5 N-m / 0.15 kgf-m

- Locate front trafficator RH **(a)** into RH side bar.

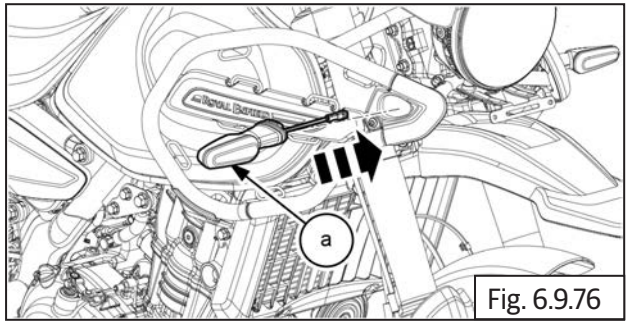

Fig. 6.9.76

- Connect electrical coupler **(a)** into front trafficator RH.

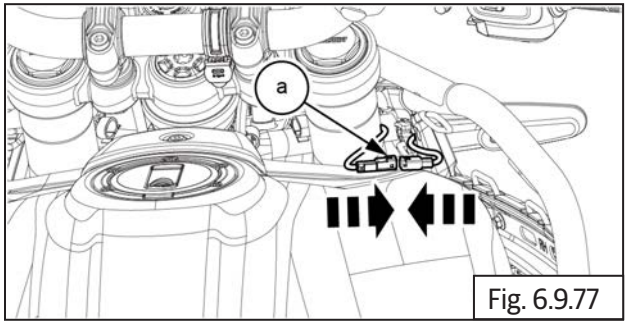

Fig. 6.9.77

- Gently press and locate retainer clip **(a)** into trafficator RH.

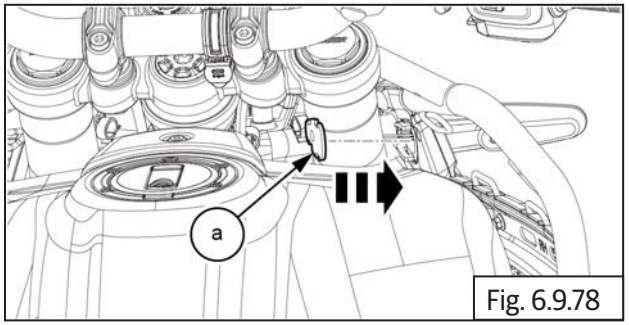

Fig. 6.9.78

6.9.15 Ornamented cover LH

- Insert the ornamented cover LH **(a)** into sub frame RH.

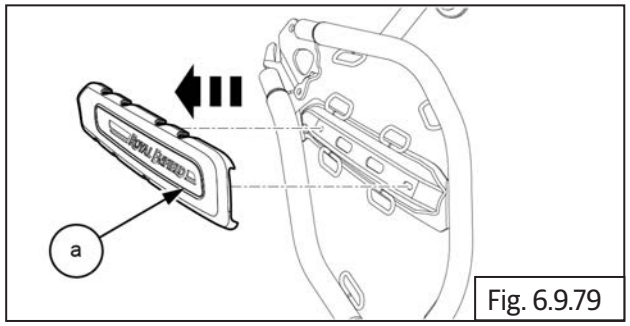

Fig. 6.9.79

- Locate and tighten the **2 Nos** hex nuts **(M6) (a)** into ornamented cover LH.

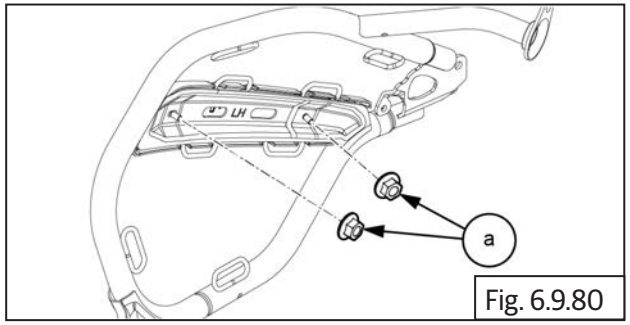

Fig. 6.9.80

	8mm socket with ratchet
Torque	3 N-m / 0.3 kgf-m

6.9.16 Side Bar LH

- Insert inner cover LH **(a)** into sub frame.

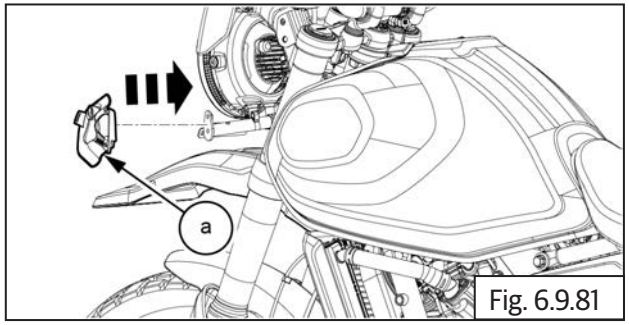

Fig. 6.9.81

- Locate LH side bar **(a)** on vehicle.

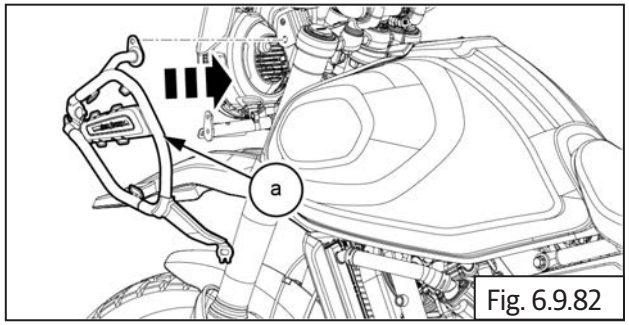

Fig. 6.9.82

- Locate and tighten hex head bolt **1 No (M6) (a)** with nut **(b)** into cradle frame.

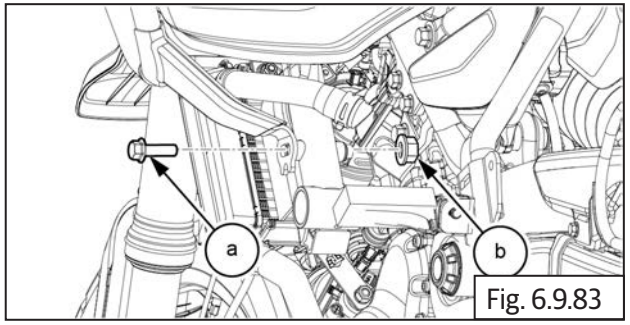

Fig. 6.9.83

	12mm socket with ratchet
Torque	25 N-m / 2.5 kgf-m

- Locate and tighten the hex head bolt **1 No (M8) (a)** with nut **(b)** into top bracket.

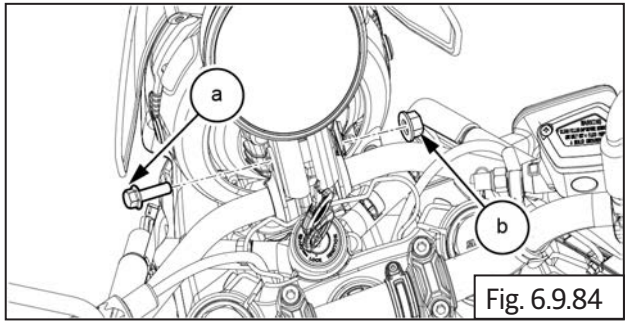

Fig. 6.9.84

	12mm socket with ratchet
Torque	25 N-m / 2.5 kgf-m

- Locate and tighten button head bolt **1 No (M6) (a)** from LH inner cover.

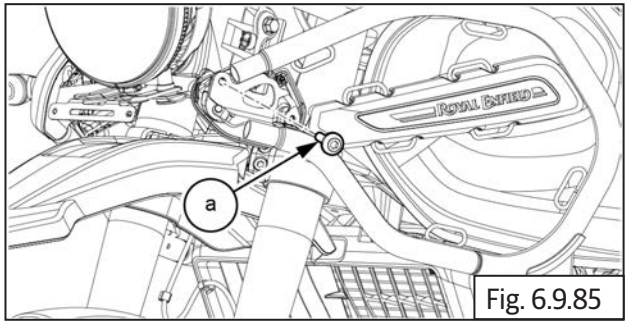

Fig. 6.9.85

	5mm Allen socket with ratchet
Torque	10 N-m / 1.0 kgf-m

- Locate the cover outer LH **(a)** on LH side bar.

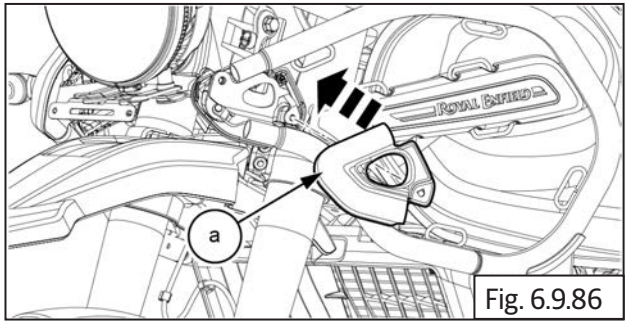

Fig. 6.9.86

- Locate and tighten button head bolt **1 No (M5) (a)** into LH outer cover.

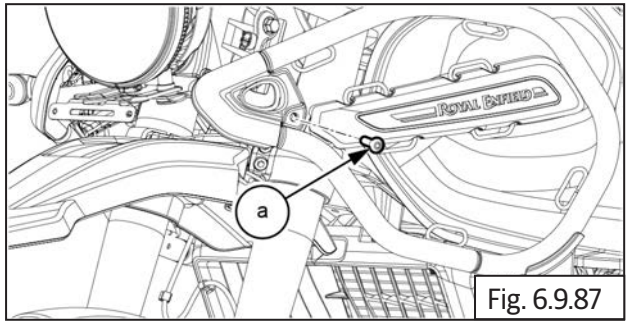

Fig. 6.9.87

	3mm Allen socket with ratchet
Torque	1.5 N-m / 0.15 kgf-m

- Locate front trafficator LH **(a)** into LH side bar.

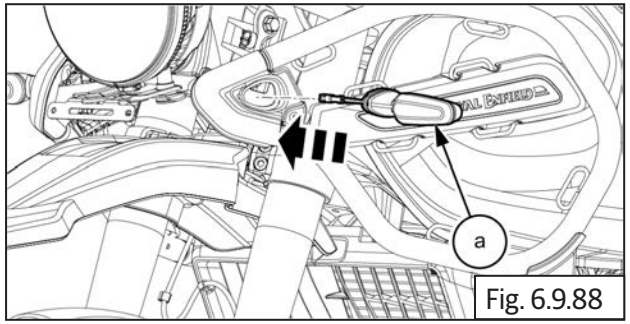

Fig. 6.9.88

- Connect electrical coupler **(a)** into front trafficator LH.

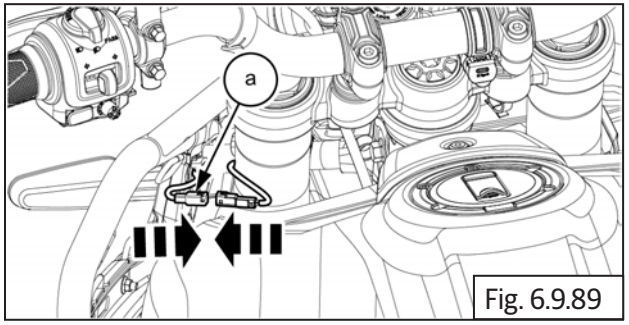

Fig. 6.9.89

- Gently press and locate retainer clip **(a)** into trafficator LH.

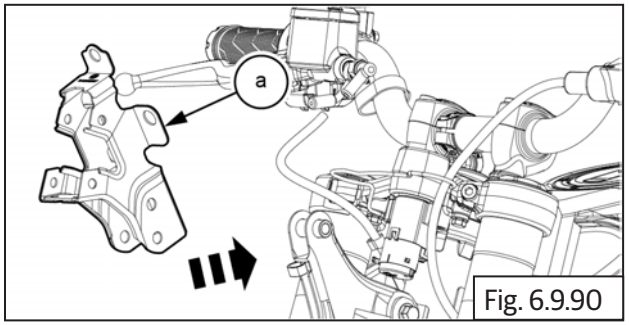

Fig. 6.9.90

- Connect the battery terminals.
- Make sure the cluster, front trafficators, and head lamps work properly.

FUEL SYSTEM

CONTENTS PAGE

7. Fuel System 389

Dismantling 391

7.1. Fuel Tank 391

7.1.2. Fuel Tank Cap 393

7.1.3. Fuel Pump 394

7.1.4. Strainer 395

7.1.5. Fuel Float 396

Inspection 397

7.1.6. Fuel Float 397

7.1.7. Fuel Pump 397

Assembly 398

7.1.8. Fuel Float 398

7.1.9. Strainer 399

7.1.10. Fuel Pump 400

7.1.11. Fuel Tank Cap 401

7.1.12. Fuel Tank 401

7. Fuel System

⚠ WARNING

Gasoline is extremely flammable and highly explosive. Please handle with care. Improper handling can lead to fatal accident or serious injury. Always drain/fill fuel only in a well ventilated area.

Ensure there is no scope for flames or sparks near by while draining/filling fuel.

⚠ CAUTION

Make sure the fuel pressure is relieved before disconnecting the fuel connection.

⚠ CAUTION

Ensure the motorcycle is upright on a firm and flat surface.

FUEL DELIVERY MODULE (FDM) - Don'ts during serviceability

- Avoid handling / holding FDM using Strainer, Cover supply port, Electrical connector and Harness.
- Hands must be free from dust, oil & water during part handling.
- No liquid-based testing allowed.
- Dust cap must not be removed until mating hoses are assembled (Confirmation required for dust cap removal during leak testing).
- Fuel Supply Port and Electrical connector shall be completely covered during leak testing.
- No Compression/Pressure applied on FDM Strainer.
- Harness & all electrical connections must not be pulled/disturbed.
- All sealing surfaces, Strainer must not be touched by any gauge/ fixture or tool.
- Old seal should not be reused
- Bar code label on cover must not be removed.
- Once if FDM is dropped should not be used and it must go to rejection.
- Polybags must be removed just before assembly to tank if any.

Dismantling

7.1. Fuel Tank

Prior Removal:

- Ensure ignition key and engine stop switch are in OFF position.
- Remove the rider and pillion seats.
- Disconnect battery negative (-) terminal.

⚠ CAUTION

Be careful while connect and disconnect the electrical couplers. Do not damage pins of the couplers.

- Loosen and remove 1 Nos. Hex head flange bolt **(a)** and nut **(M6) (b)** from rear end of fuel tank on frame.

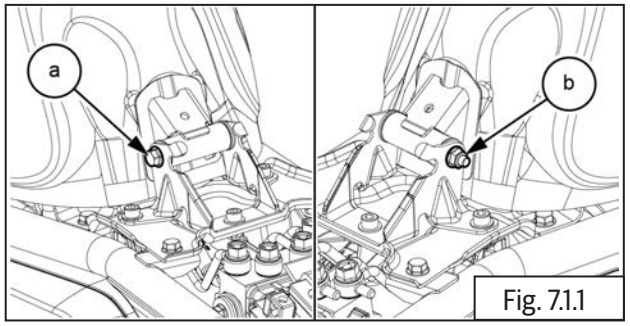

Fig. 7.1.1

	10 mm and 8mm Socket with Ratchet

- Loosen and remove 3Nos cap bolts with washers **(a)** from tank mount bracket.

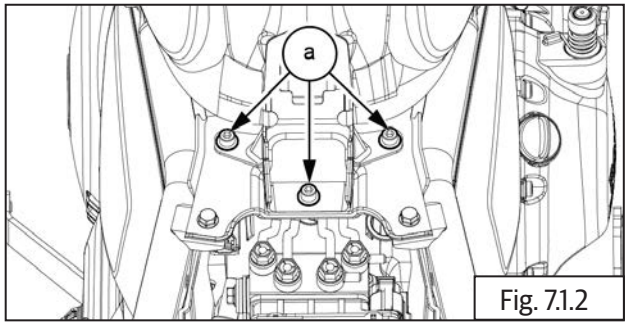

Fig. 7.1.2

	5mm Allen key

- Remove the tank mount bracket **(a)** .

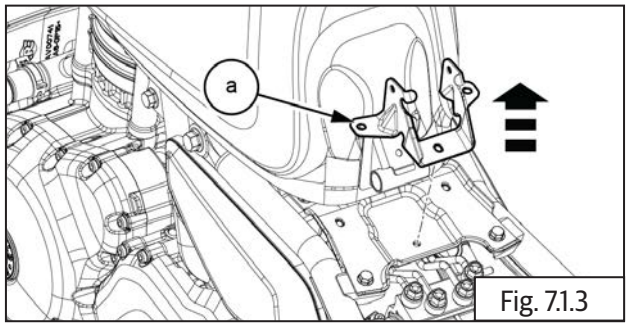

Fig. 7.1.3

- Remove spacer and damper from fuel tank.

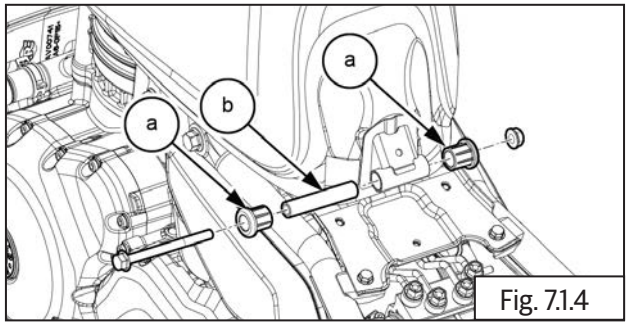

Fig. 7.1.4

- Gently lift fuel tank **(a)** upwards and pull backwards slightly.

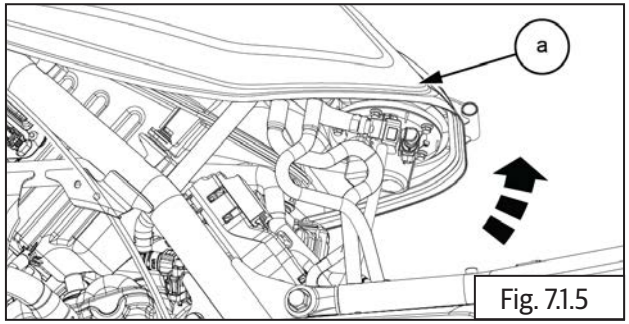

Fig. 7.1.5

⚠ CAUTION

DO NOT lift the tank too much to prevent damage to connectors and brake hoses.

- Disconnect EVAP connection hose **(b)** from bottom of fuel tank.
- Disconnect drain hose connection **(a)** from bottom of fuel tank

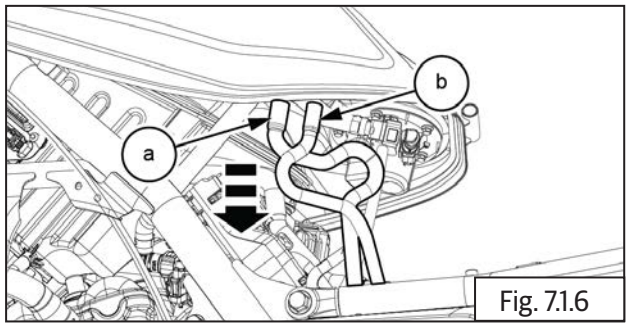

Fig. 7.1.6

- Clean quick fix adapter area and disconnect by pressing lock button **(a)** from fuel pump **(b)** .

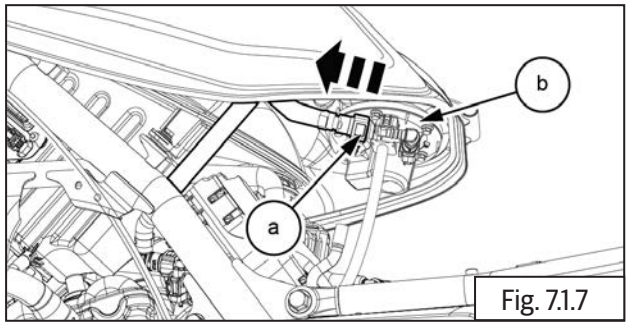

Fig. 7.1.7

- Disconnect fuel pump connector **(a)** from fuel tank **(b)**.

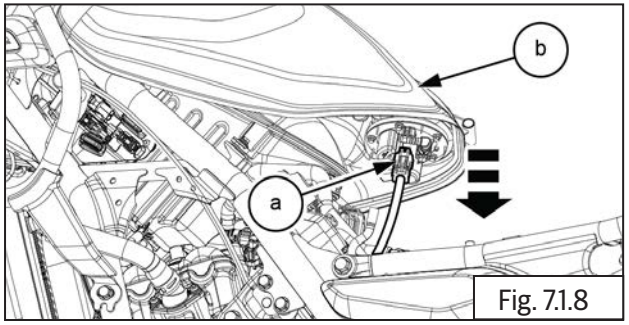

Fig. 7.1.8

- Disconnect fuel gauge connector **(a)** from fuel tank .

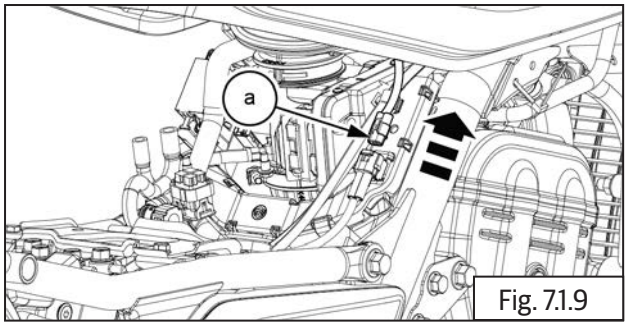

Fig. 7.1.9

- Gently remove fuel tank **(a)** from frame.

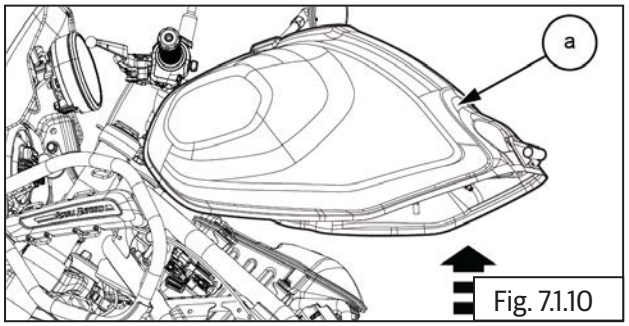

Fig. 7.1.10

- Remove fuel hose **(a)** from injector cap.

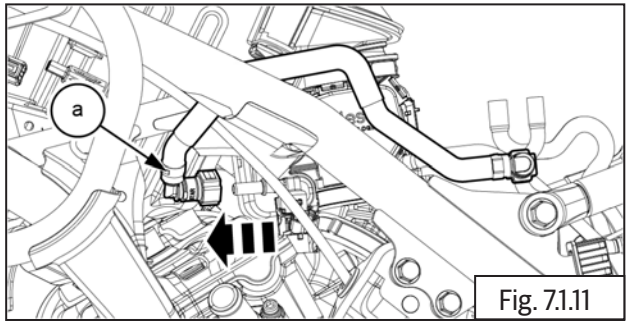

Fig. 7.1.11

- Remove LHS and RHS tank dampers **(a)** from frame.

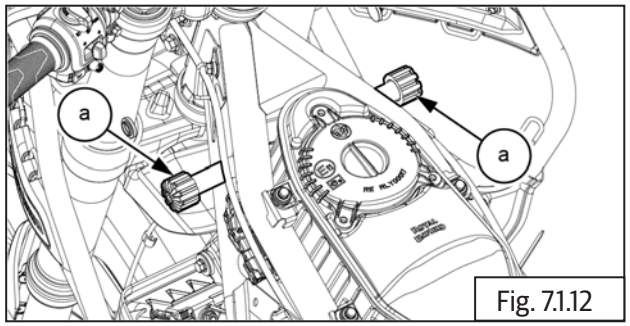

Fig. 7.1.12

- Remove the button leg bolt **(a)** from fuel tank cover.

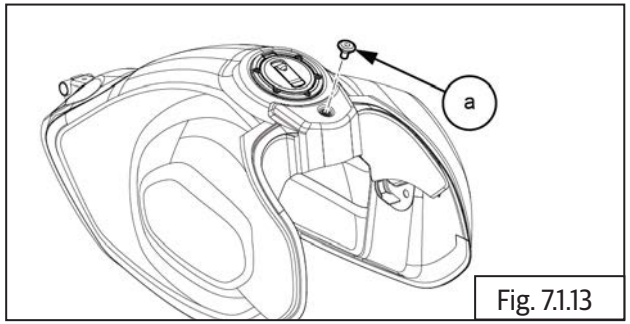

Fig. 7.1.13

	4mm Allen key

- Remove the cover **(a)** from fuel tank.

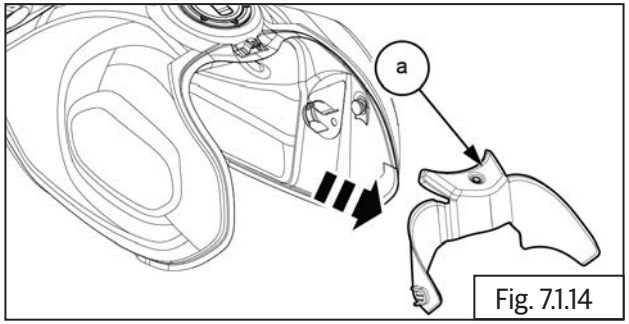

Fig. 7.1.14

- Remove the clip nut **(a)** from fuel tank.

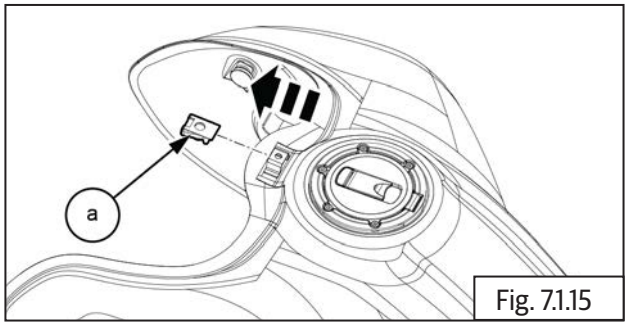

Fig. 7.1.15

- Remove the mount rubber 2Nos **(a)** from fuel tank.

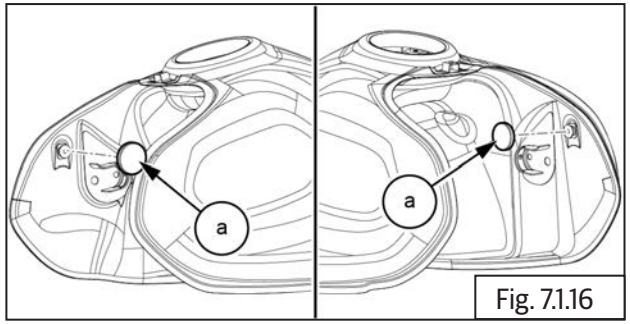

Fig. 7.1.16

7.1.2 Fuel Tank Cap

- Lift key flap **(a)** on fuel tank and insert key **(b)** turn clock wise to open.

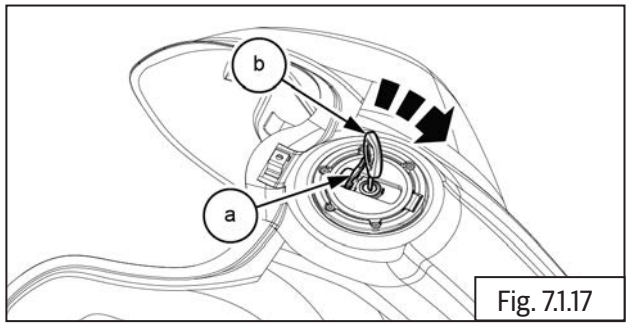

Fig. 7.1.17

- Loosen and remove 3 Nos. cap bolts **(M4) (a)** from fuel tank outer ring.

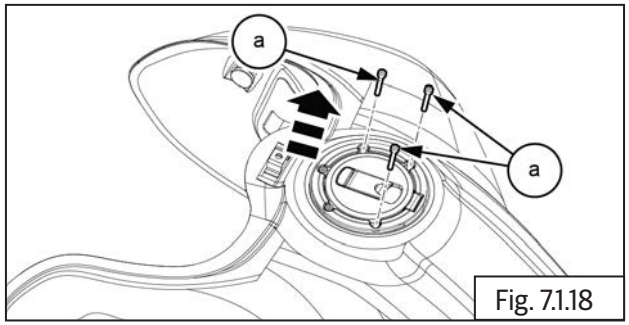

Fig. 7.1.18

	3mm Allen key

- Remove the outer ring with tank cap **(a)** from fuel tank.

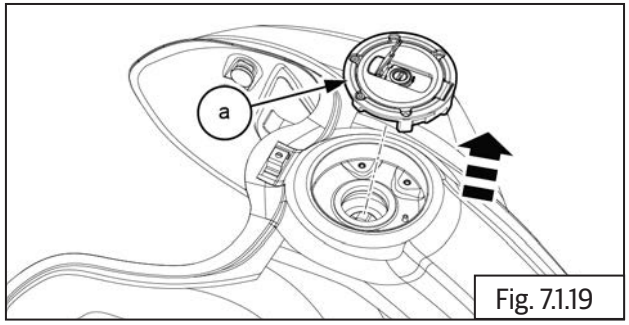

Fig. 7.1.19

- Gently tap to remove spring dowel **(a)** from tank cap

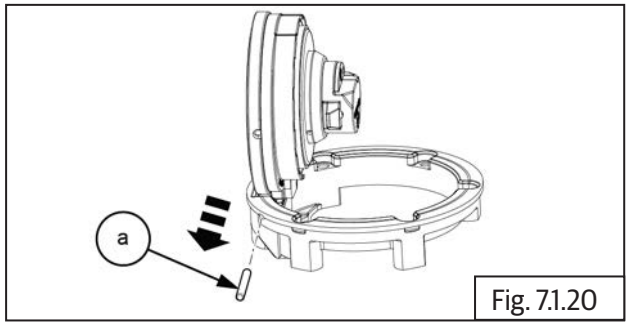

Fig. 7.1.20

	Punch and Mallet

- Remove the tank cap **(a)** from outer ring.

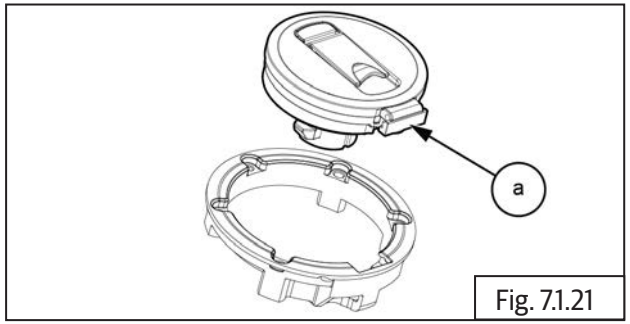

Fig. 7.1.21

7.1.3. Fuel Pump

- Invert fuel tank to access fuel pump and fuel float.

⚠ CAUTION

- **Ensure the tank top/side surfaces DO NOT get damaged or scratched while removing fuel pump/float. Provide adequate protection to fuel tank.**

- Loosen and remove 5 Nos. Hex flange head bolts **(M5) (a)** from fuel pump.

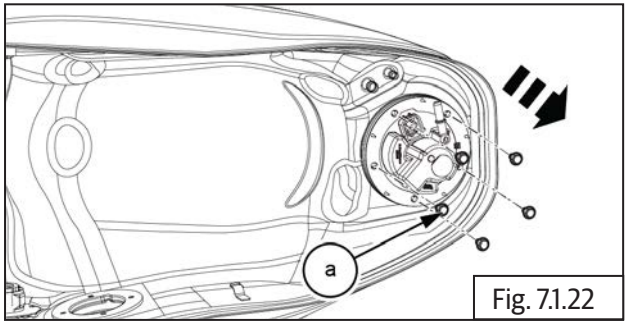

Fig. 7.1.22

	8 mm Socket with Ratchet

- Remove lock plate **(a)** from fuel pump.

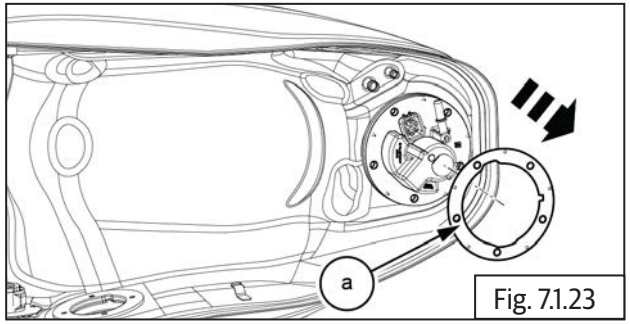

Fig. 7.1.23

- Gently pull out the fuel pump **(a)** from fuel tank.

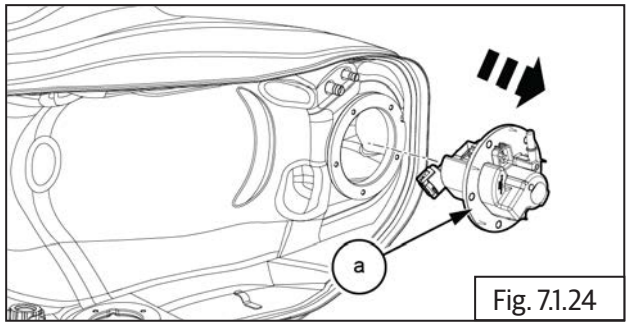

Fig. 7.1.24

- Remove seal **(a)** from fuel pump.

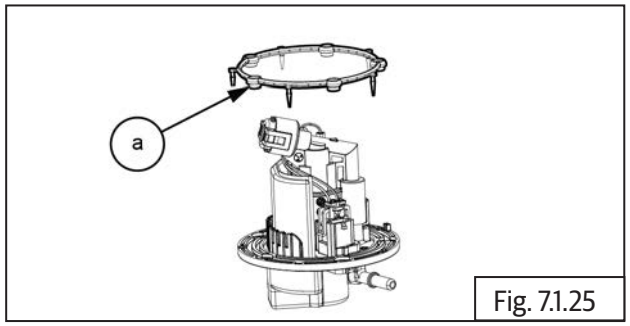

Fig. 7.1.25

7.1.4. Strainer

- Ensure clean work area prior to the replacement process.
- To ensure there is no damage to the wiring harness during the strainer serviceability we suggest to remove the wiring harness connector.
- Pull the snap window outwards first and then lift the electrical connector **(a)** upwards remove.
- Then without damaging/deforming locks provided in the connector take out the connector **(a)** carefully.

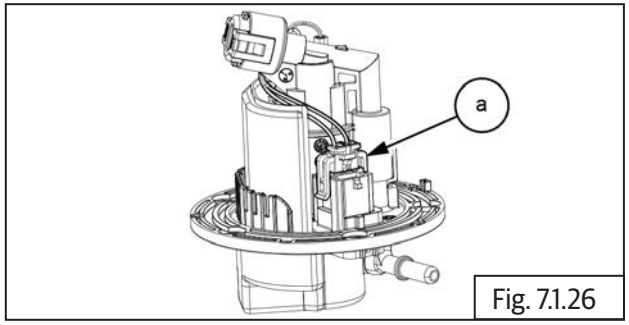

Fig. 7.1.26

NOTE
• *This operation requires 2 persons.*

- Pull the snap window gently with the help of 2nd person.
- To remove snap 2 and 3, Either screw driver or fingers can be used.
- Once all the 3 snaps are unsnapped, Then pull the pump retainer upwards carefully.

NOTE
• *Please ensure that there is no deformation of snap windows.*

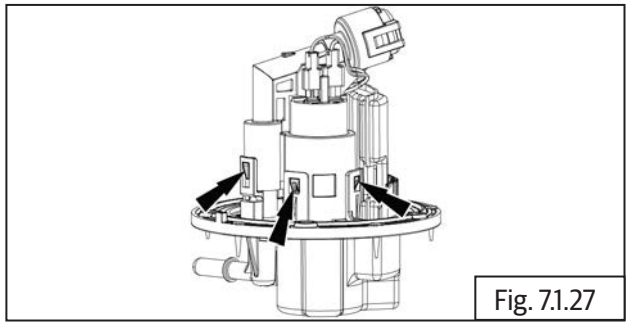
Fig. 7.1.27

	screw driver

- Hold the cover at bottom and then Pull the pump retainer upward direction.
- Once the complete pump retainer assembly is taken out.

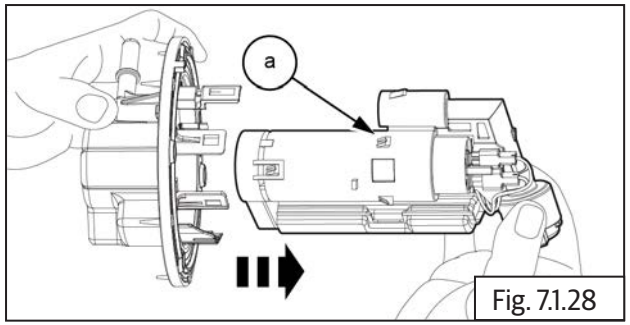

Fig. 7.1.28

- Lift the strainer snap window by screw driver from the snap (2 snaps) **(a)** provide in the pump retainer carefully.

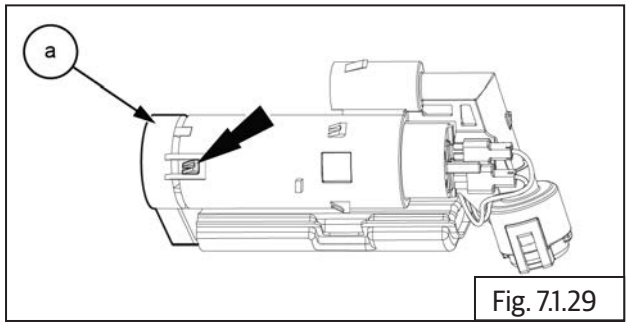

Fig. 7.1.29

	screw driver

- Hold the pump retainer & pump **(a)** and then pull the strainer carefully.
- Remove the strainer **(b)** carefully without damaging the pump.
- During strainer removal **(b)**, The pump & pump retainer **(a)** must be held firmly.

NOTE
• *Please ensure pump inlet plate must not be damaged during removing strainer* **(b)**.

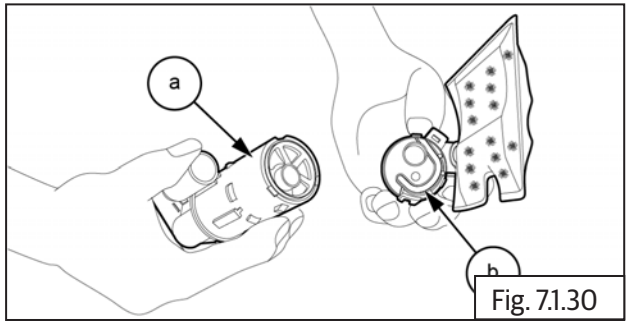

Fig. 7.1.30

NOTE
• *While removing strainer, Ensure that no contaminations enters the pump spout until assembling the new strainer.*

7.1.5. Fuel Float

- Release the folding clip **(a)** from float wiring harness.

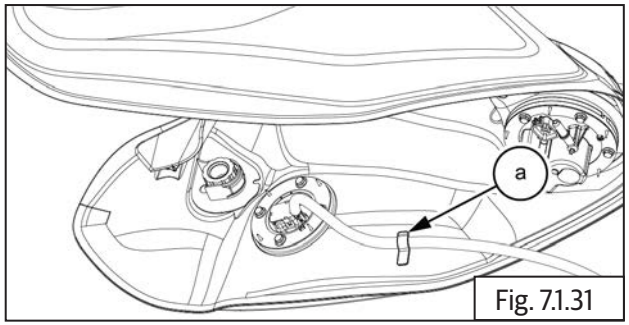

Fig. 7.1.31

- Remove the coupler **(a)** from fuel float.
- Remove the sub harness from fuel float.

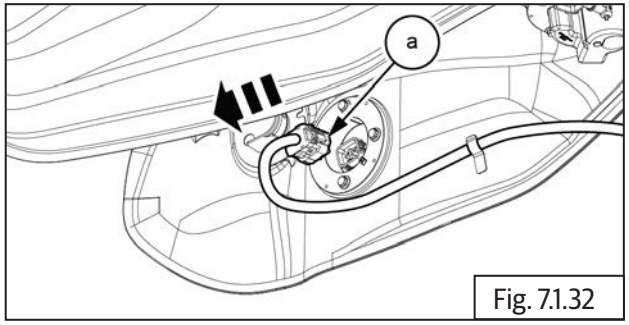

Fig. 7.1.32

- Before removal draw the positional mark on the float surface using marker.

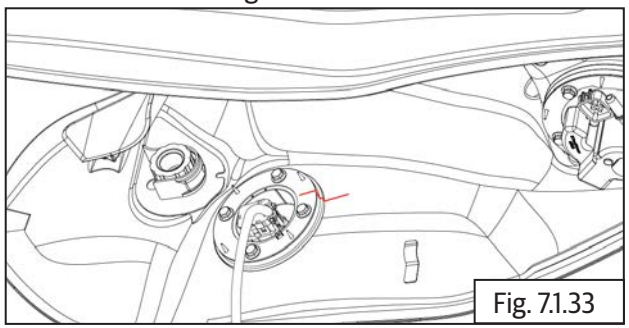
Fig. 7.1.33

- Loosen and remove 4 Nos. Hex head flange bolts **(M5) (a)** from fuel float .

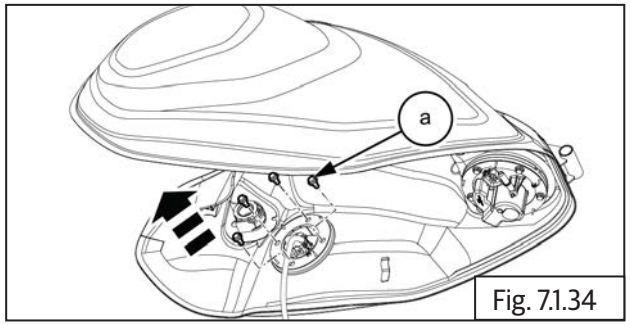

Fig. 7.1.34

	8 mm Socket with Ratchet

- Remove lock plate **(a)** from fuel float.

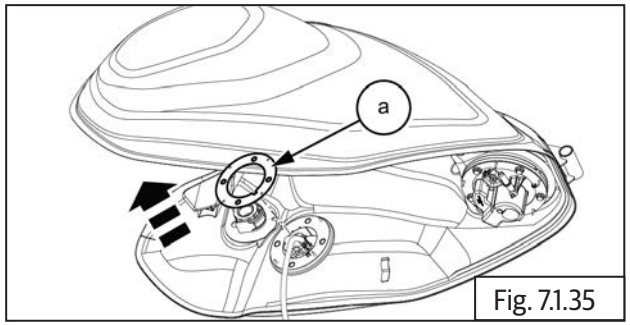

Fig. 7.1.35

- Gently lift to take out the complete float unit **(a)** from tank.

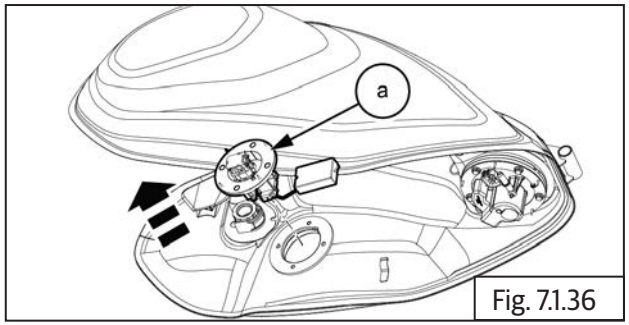

Fig. 7.1.36

⚠ CAUTION

Ensure the float unit does not gets damaged or bent while removing from fuel tank. Store fuel float unit carefully. Do not disturb the level of the float unit as it will seriously affect fuel level indication.

- Remove seal **(a)** from fuel float.

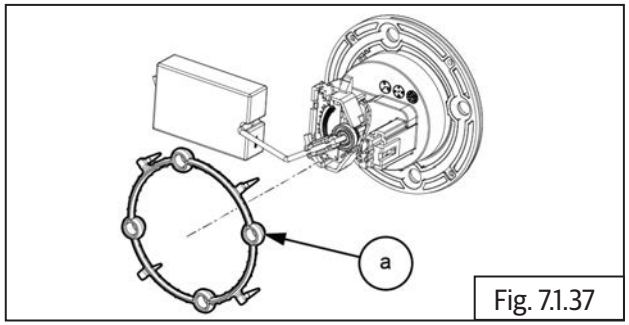

Fig. 7.1.37

Inspection

7.1.6. Fuel Float

- Check resistance at float unit pins at lower position.
- Check the resistance at float unit pins at higher position.
- Inspect float assembly for fuel ingress. Replace if fuel float assembly is punctured.

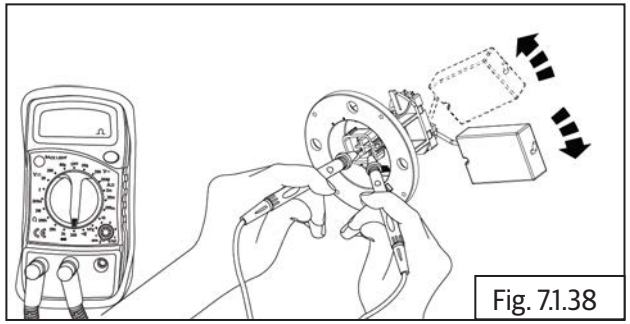
Fig. 7.1.38

7.1.7. Fuel Pump

- Check resistances at fuel pump **(a)** terminals **(b)**. Replace if resistances are out of specifications.

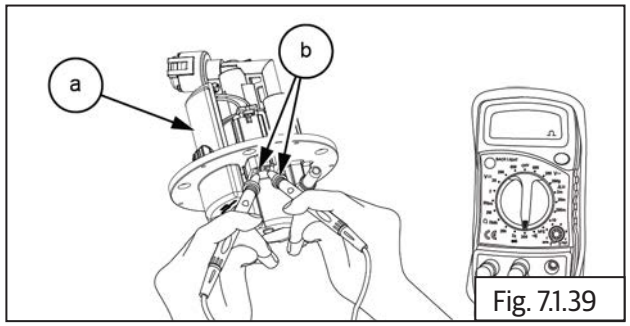

Fig. 7.1.39

- Replace following whenever fuel system is dismantled:
  - Seals
  - Rubber hoses
  - strainer

NOTE
• *Do not use the old seals again when ever install the fuel float and the fuel pump. Use new seals instead.*

Assembly

7.1.8. Fuel Float

- Locate new seal **(a)** into float unit.

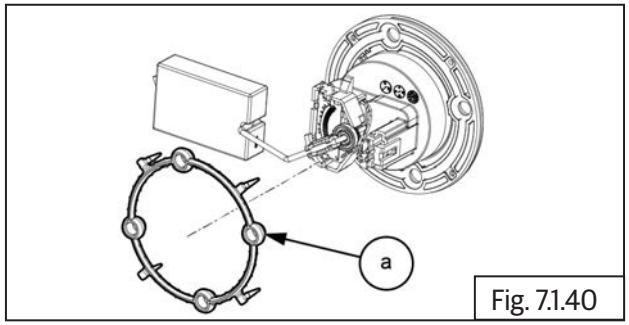

Fig. 7.1.40

- Locate and place the complete float unit **(a)** into fuel tank.

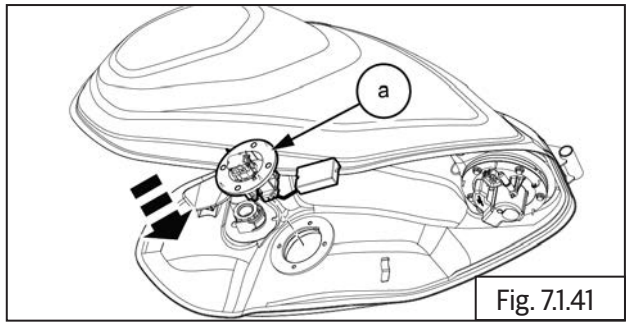

Fig. 7.1.41

- Locate and position the lock plate **(a)** on the fuel float.

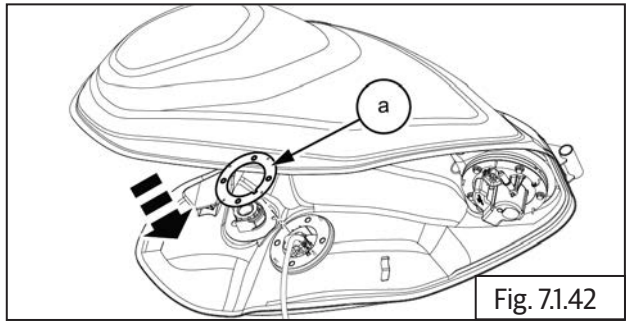

Fig. 7.1.42

- Locate and tighten 4 Nos. Hex head flange bolts **(M5) (a)** on fuel float .

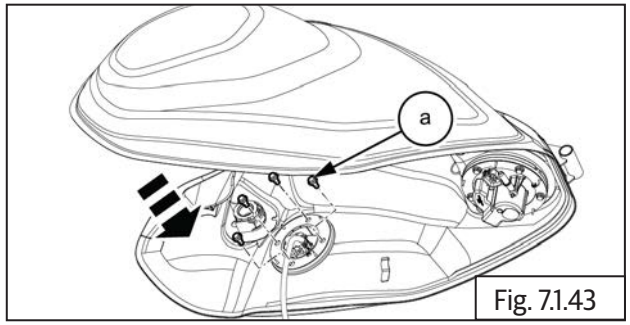

Fig. 7.1.43

	8 mm Socket with Ratchet
Torque	5 N-m / 0.5 kgf-m

- Connect sub float wiring harness coupler on fuel float.

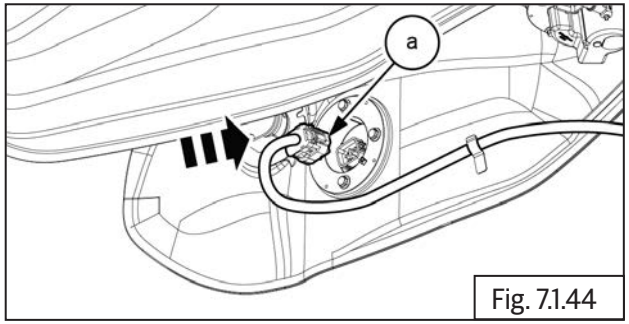

Fig. 7.1.44

- Close the folding clip **(a)** on float wiring harness.

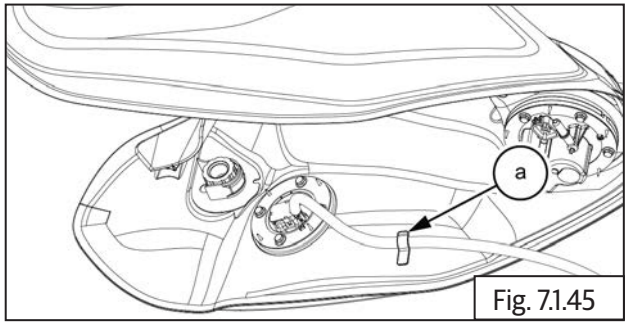

Fig. 7.1.45

7.1.9. Strainer

- Take new strainer **(b)** and remove the dust cap on the strainer.
- The strainer assembly for the pump and pump retainer **(a)** it can be assembled in one direction.

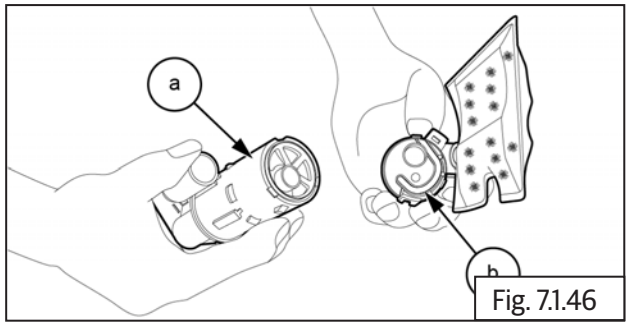

Fig. 7.1.46

NOTE
• *Ensure the Pump flow path and the Strainer spout is in the same line during assembly.*

- Hold the pump retainer and push the strainer **(a)** until it get snapped.
- Press and Snap fit Make sure the locks in the strainer locked properly to the snaps provided in the module.

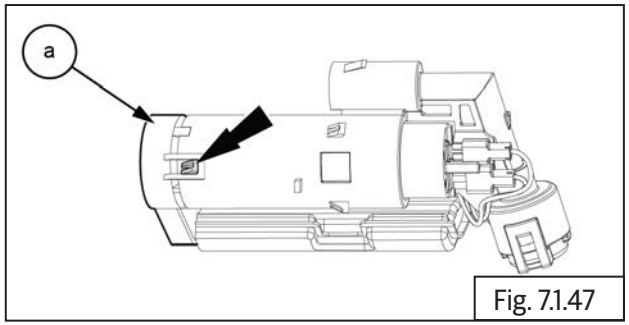

Fig. 7.1.47

- After completing the strainer assembly with the pump retainer. Assemble the pump retainer assembly **(a)** to the cover.
- Align the slot provided in the frame to key provided in cover.
- Align pump retainer assembly **(a)** to the cover check the slot position in cover during alignment.
- Ensure the O ring presence and no damage O-ring during assembly.
- Hold the module and lift the cover upwards carefully until the complete snap.

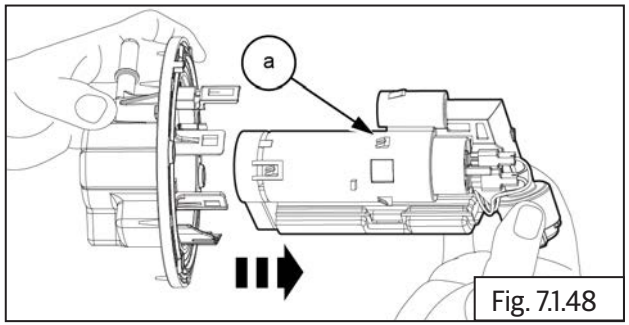

Fig. 7.1.48

- Once assembled, Check all the 3 snaps are locked properly.

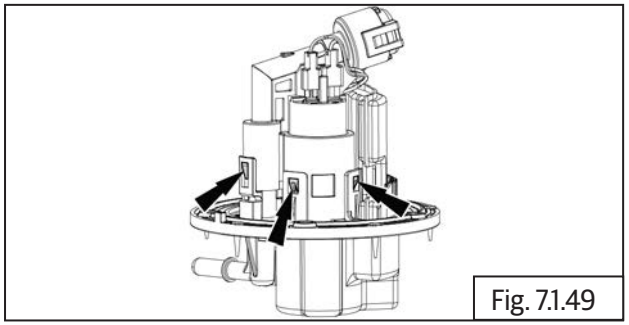
Fig. 7.1.49

	screw driver

- Then realign the module to back side and then push the electrical connector **(a)**. without damaging locks provided in the connector.

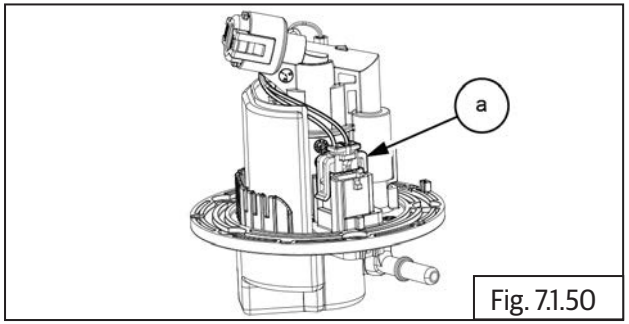

Fig. 7.1.50

- Confirm the snap lock is properly fitted.

7.1.10. Fuel Pump

- Locate new seal **(a)** into fuel pump.

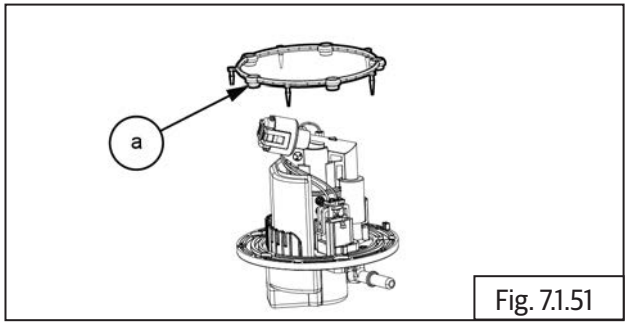

Fig. 7.1.51

- Locate and place the fuel pump **(a)** into fuel tank.

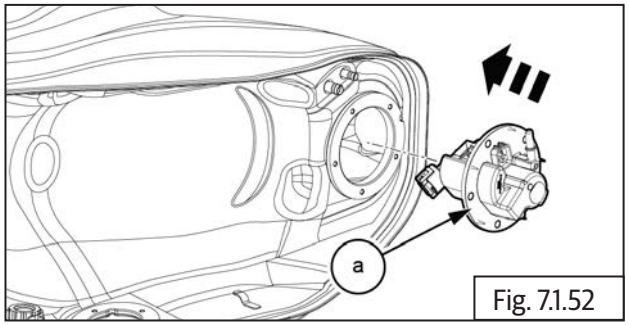

Fig. 7.1.52

- Ensure the pump cover slot should be match to fuel tank slot.

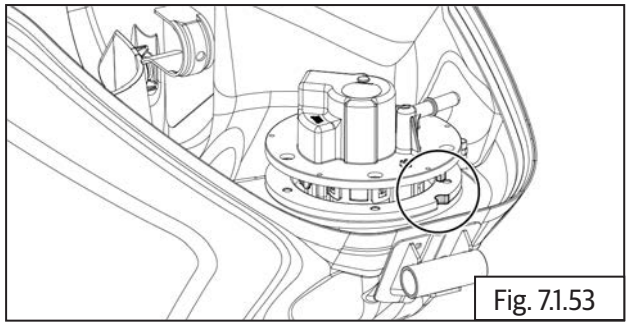

Fig. 7.1.53

NOTE
• Fuel pump assembly to the tank it can be assembled in only one direction.

- Locate and position the lock plate **(a)** on the fuel pump.

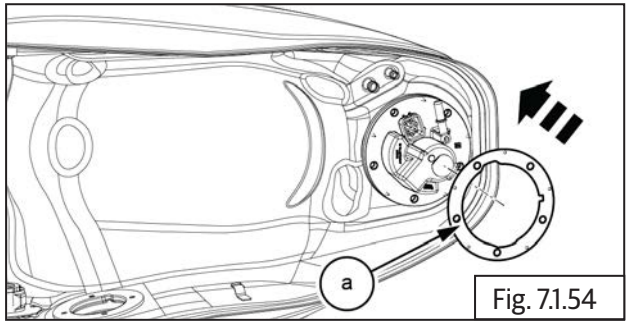

Fig. 7.1.54

- Locate the 5 Nos.Hex head flange bolts **(M5) (a)** on the fuel pump.

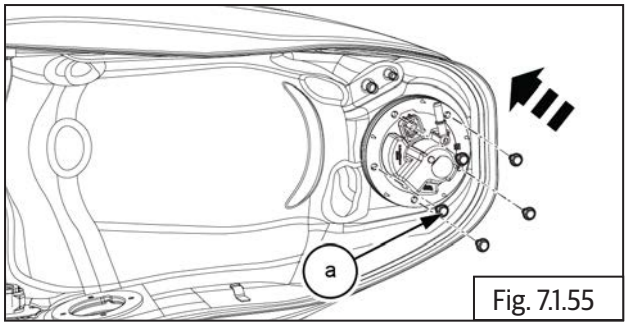

Fig. 7.1.55

- Tighten the bolts below sequence.

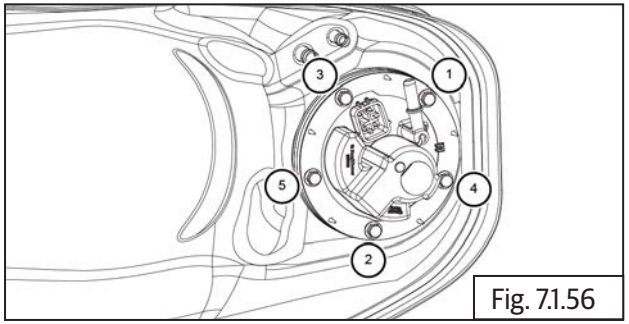

Fig. 7.1.56

	8 mm Socket with Ratchet
Torque	5 N-m / 0.5 kgf-m

7.1.11. Fuel Tank Cap

- Locate and align the tank cap **(a)** into outer ring.

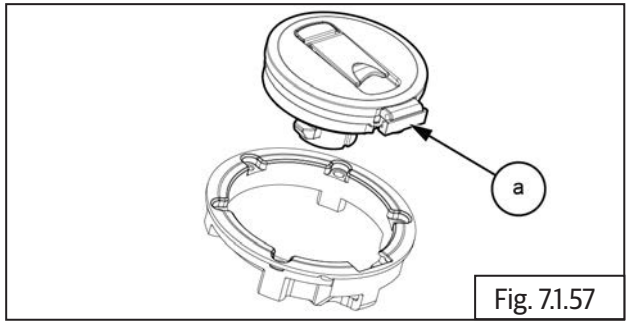

Fig. 7.1.57

- Gently tap to install the spring dowel **(a)** into tank cap

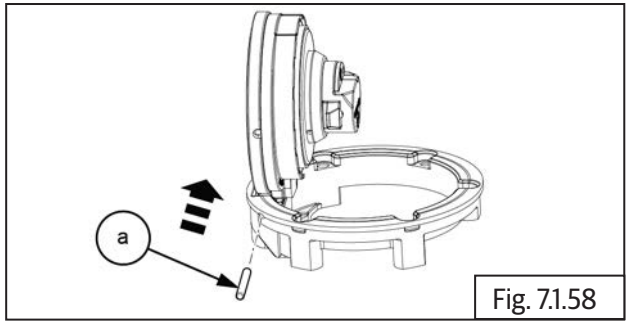

Fig. 7.1.58

	Punch and Mallet

- Locate and align the outer ring with tank cap **(a)** on fuel tank.

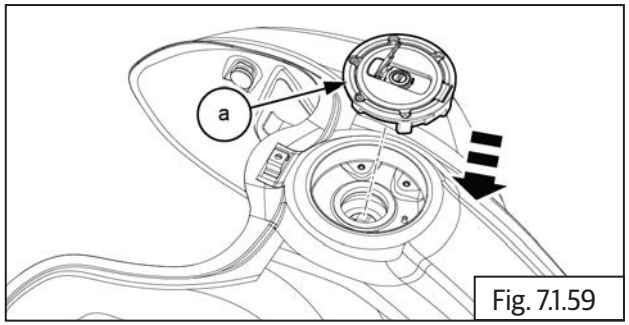

Fig. 7.1.59

- Locate and tighten the 3 Nos. cap bolts **(M4) (a)** on fuel tank outer ring.

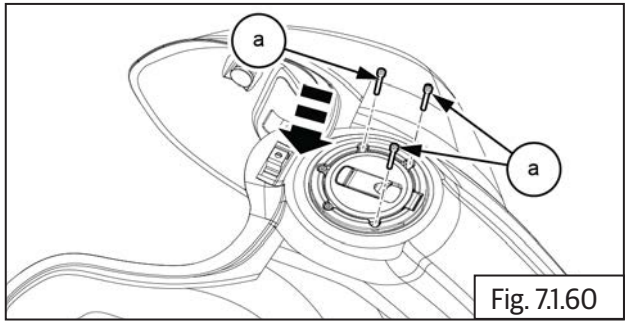

Fig. 7.1.60

	3mm Allen key with Ratchet
Torque	4 N-m / 0.4 kgf-m

7.1.12. Fuel Tank

- Install the mount rubber 2Nos **(a)**on fuel tank.

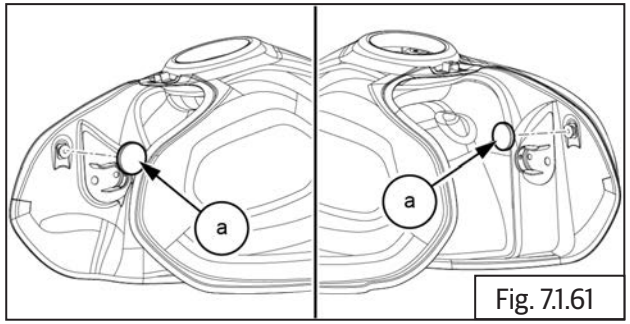

Fig. 7.1.61

- Locate the clip nut **(a)** on front of the fuel tank.

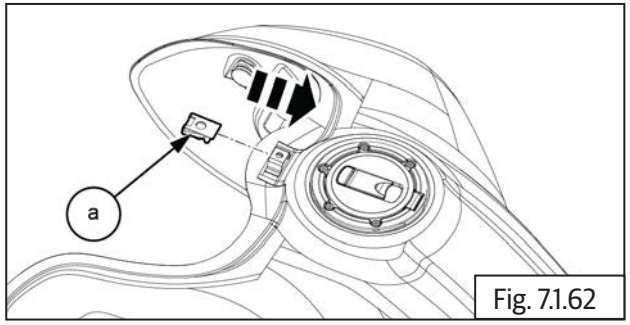

Fig. 7.1.62

- Locate the cover **(a)** into fuel tank.

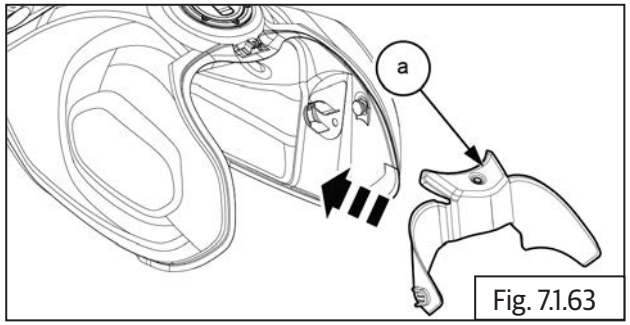

Fig. 7.1.63

- Locate and tighten the button leg bolt **(a)** on fuel tank cover.

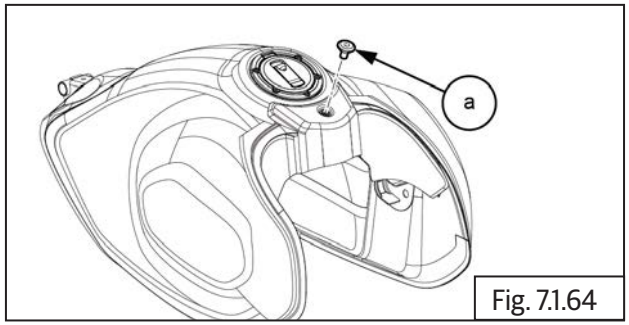

Fig. 7.1.64

	4mm Allen key with Ratchet
Torque	5N-m / 0.5 kgf-m

- Insert LHS and RHS tank dampers **(a)** into frame.

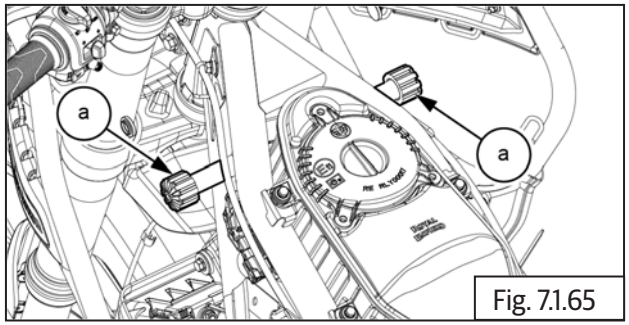

Fig. 7.1.65

- Connect fuel hose **(a)** into injector cap.

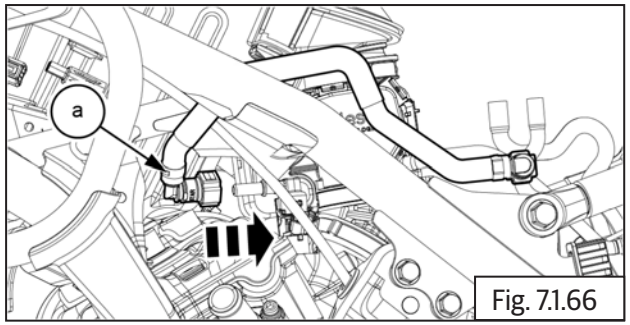

Fig. 7.1.66

- Gently locate the fuel tank **(a)** on frame.

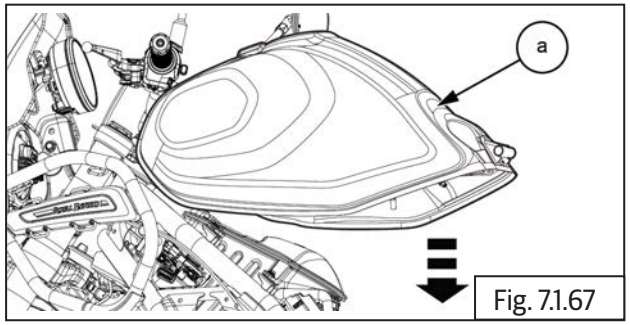

Fig. 7.1.67

- Connect fuel gauge connector **(a)** on fuel tank .

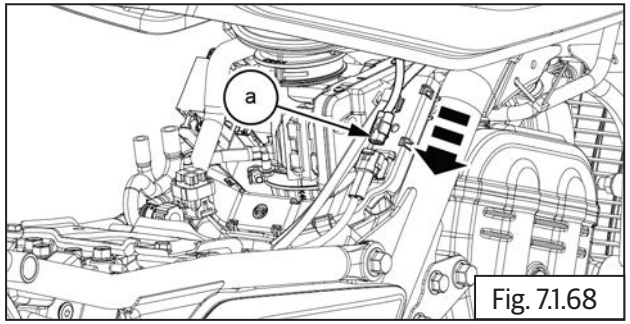

Fig. 7.1.68

- Connect fuel pump connector **(a)** on fuel tank **(b)**.

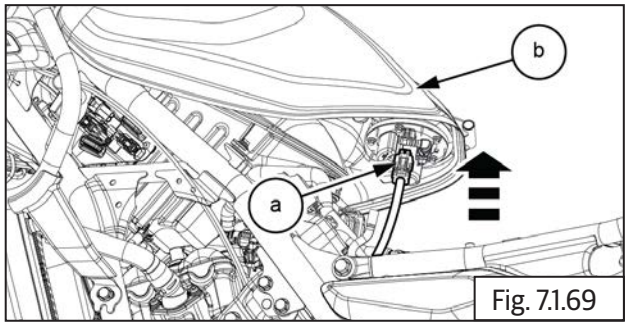

Fig. 7.1.69

- Clean quick fix adapter area and connect by pressing lock button **(a)** on fuel pump **(b)** .

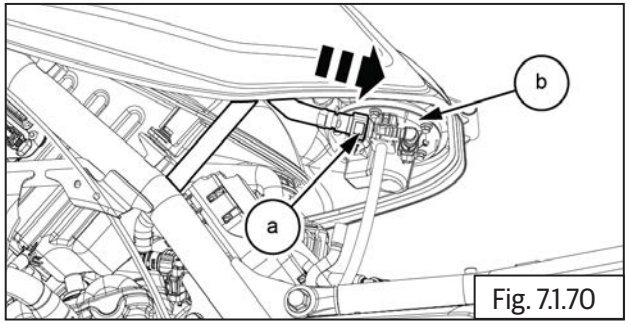

Fig. 7.1.70

- Connect EVAP connection hose **(b)** from bottom of fuel tank.
- Connect drain hose connection **(a)** from bottom of fuel tank

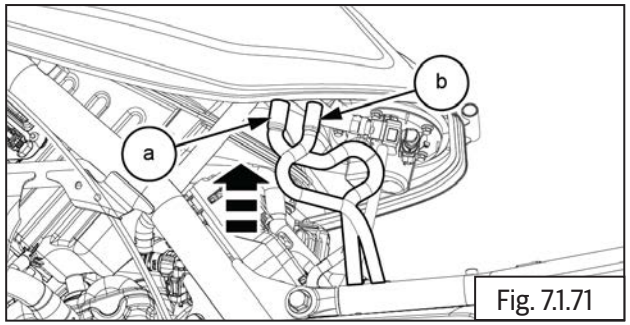

Fig. 7.1.71

- Install the spacer and damper on fuel tank.

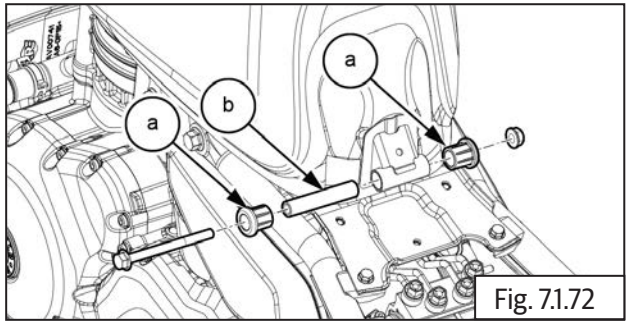

Fig. 7.1.72

- Place the tank mount bracket **(a)** on chassis frame.

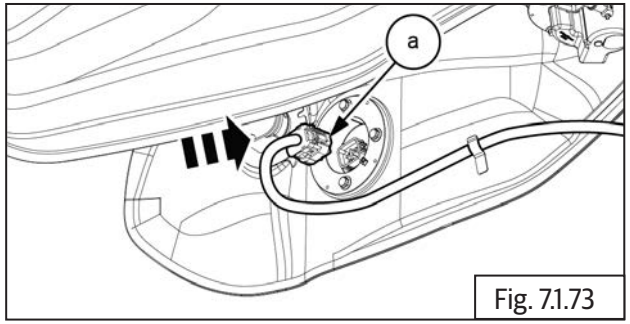

Fig. 7.1.73

- Locate and tighten 3Nos cap bolts with washers **(a)** on tank mount bracket.

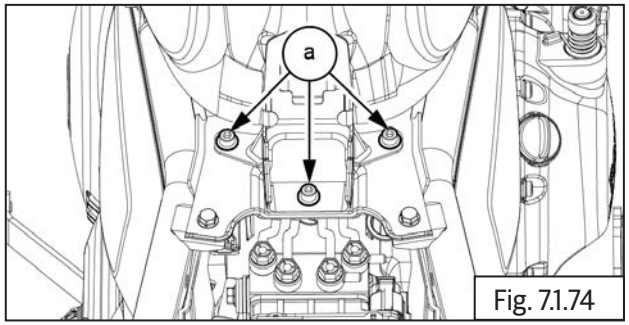

Fig. 7.1.74

	5mm Allen key with Ratchet
Torque	10 N-m / 1.0 kgf-m

- Locate and tighten 1 Nos. Hex head flange bolt **(a)** and nut **(M6) (b)** on rear end of fuel tank.

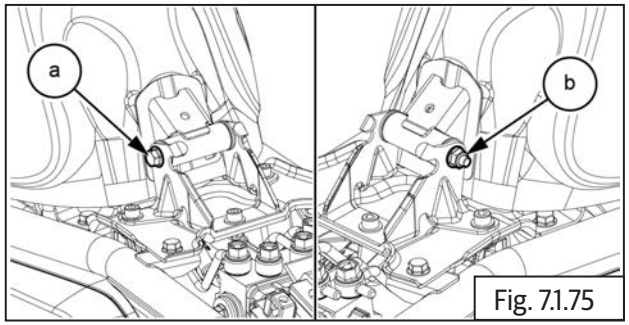

Fig. 7.1.75

	10 mm and 8mm Socket with Ratchet
Torque	10 N-m / 1.0 kgf-m

Install the following parts:

- Install the rider and pillion seats.
- Connect battery negative (-) terminal.

NOTE
• *Switch ON and OFF the ignition twice and visually check for any fuel leakage or wet on the tank and components, If anything found, inspect and rectify the issue.*

EVAPORATIVE (EVAP) EMISSION CONTROL SYSTEM

CONTENTS **PAGE**

8.1. Evaporative (EVAP) Emission Control System..... 407

Dismantling..... 407

8.1.1 EVAP Purge Valve..... 407

8.1.2. Canister 408

8.1.3. Hoses..... 409

Inspection 409

Assembly 410

8.1.4. Hoses 410

8.1.5. Canister 410

8.1.6 EVAP Purge Valve 411

8.1.7. EVAP Hose Routing Procedure 412

8. Evaporative (EVAP) Emission Control System

General Description

Royal Enfield motorcycles are equipped with Evaporative (EVAP) Emission Control System.

Whenever the motorcycle is parked after a ride or in hot summer, in high day time temperatures, fuel vapors with hydrocarbons tend to escape into the atmosphere through the vent hole of the fuel tank cap.

The evaporative emission control system traps these fuel vapors and purges it into a charcoal canister. When the engine is running, the vapors from the charcoal canister is routed through a purge valve into the combustion chamber. These vapors are also monitored by the engine management system (EMS) so as to ensure the exhaust emissions are within the specifications.

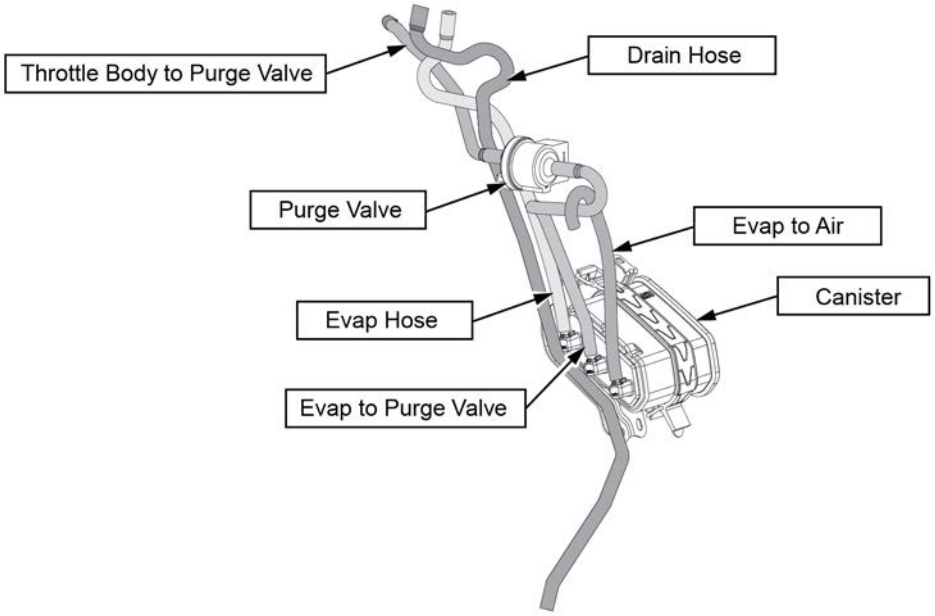

8.1. Evaporative (EVAP) Emission Control System

Dismantling

⚠ WARNING

Before dismantling any part of the EVAP system, ensure the engine and exhaust systems are at ambient temperature. Evaporative fuel vapors are highly inflammable and explosive, which can result in serious injury and or fatal accidents.

⚠ WARNING

DO NOT damage or puncture any part of the EVAP system like canister, purge valve etc. DO NOT blow high compressed air into the canister or purge valve as it can result in an explosion.

⚠ CAUTION

Ensure the motorcycle is upright on a firm and flat surface.

Prior Removal:

- Ensure ignition key and engine stop switch are in OFF position.
- Disconnect battery negative (-) terminal.
- Before removing any part of the EVAP system, open fuel tank cap to release the pressure inside.
- Remove the rider and pillion seats.
- Remove the fuel tank.
- Remove the LHS side panel.

8.1.1 EVAP Purge Valve

- Disconnect electrical coupler **(a)** from purge valve.

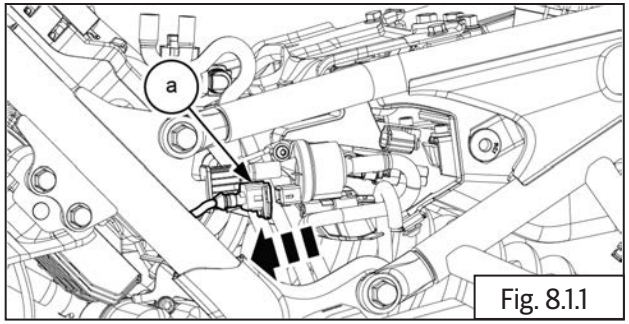

Fig. 8.1.1

- Disconnect hose **(a)** from throttle body.

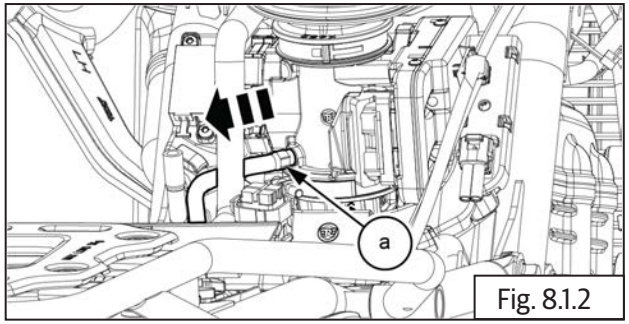

Fig. 8.1.2

- Slide and remove the purge valve with rubber boot **(a)** from bracket.

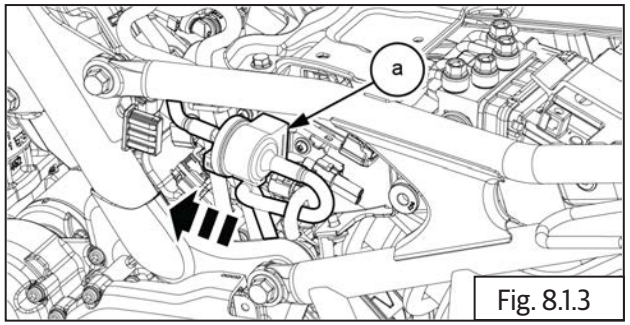

Fig. 8.1.3

- Disconnect input hose **(a)** from purge valve.

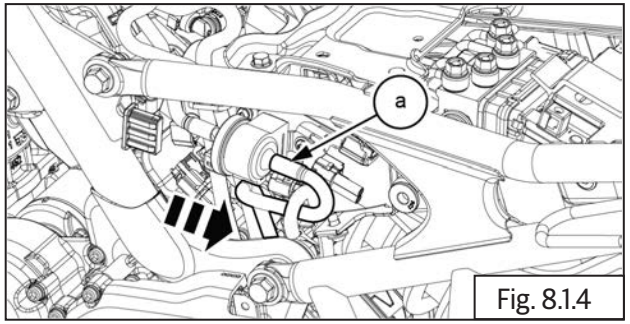

Fig. 8.1.4

- Remove the purge valve with hose assembly **(a)**.

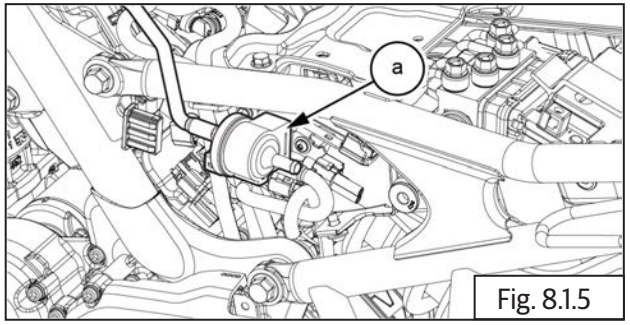

Fig. 8.1.5

- Slide and remove the rubber boot **(a)** from purge valve.

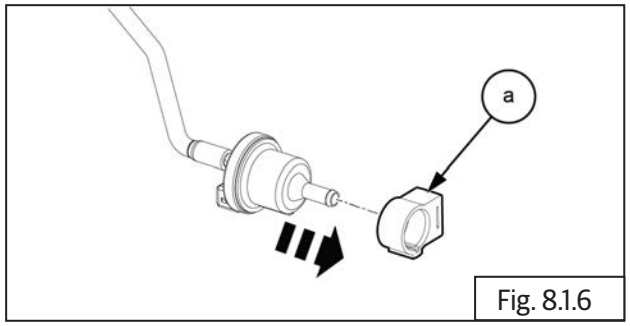

Fig. 8.1.6

- Disconnect output hose **(a)** from purge valve.

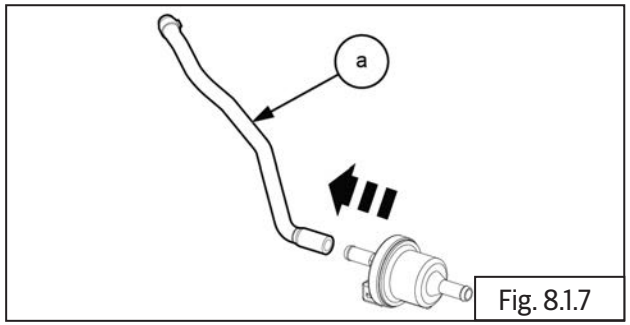

Fig. 8.1.7

8.1.2. Canister

- Remove the strap **(a)** from canister.

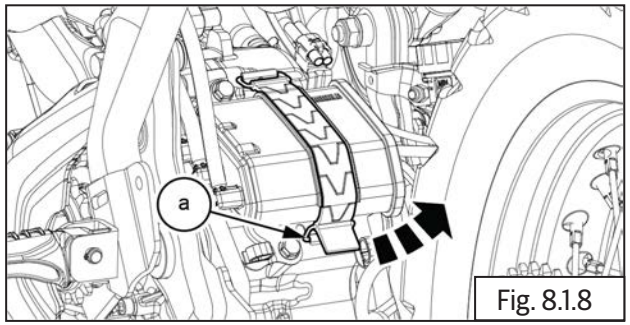

Fig. 8.1.8

- Remove the screw **(T40) (a)** with washer **(b)** from the wire guide.
- Remove the wire guide **(c)** from chassis frame .

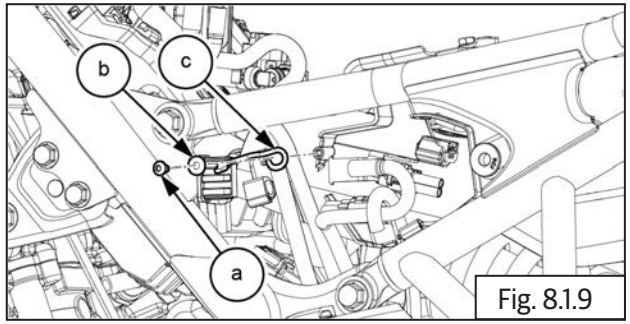

Fig. 8.1.9

	3mm Allen key

- Remove the canister with pipe assembly **(a)** from chassis frame.

⚠ CAUTION

Do not apply excessive force to pull out canister with hoses as it will damage the canister and the hose pipes.

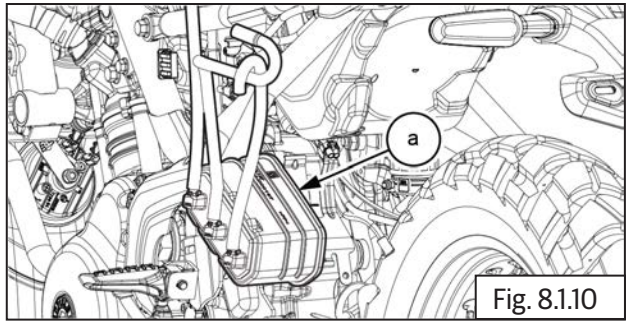

Fig. 8.1.10

- Loosen and remove the flange head bolts **2 Nos (M6) (a)** from canister bracket.

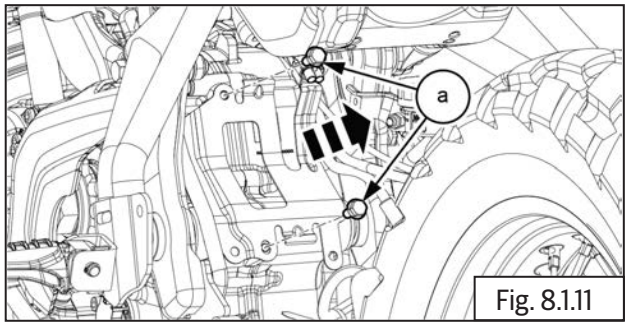

Fig. 8.1.11

	10mm socket with ratchet

- Detach the coupler clip **(a)** from canister bracket.

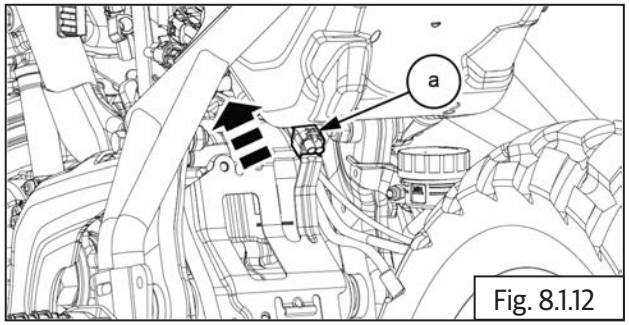

Fig. 8.1.12

	Connector

- Remove the canister bracket **(a)** from chassis frame.

Fig. 8.1.13

8.1.3. Hoses

- Disconnect all hoses from the canister.
- EVAP to tank **(a)**
- EVAP to purge valve **(b)**
- EVAP to air **(c)**

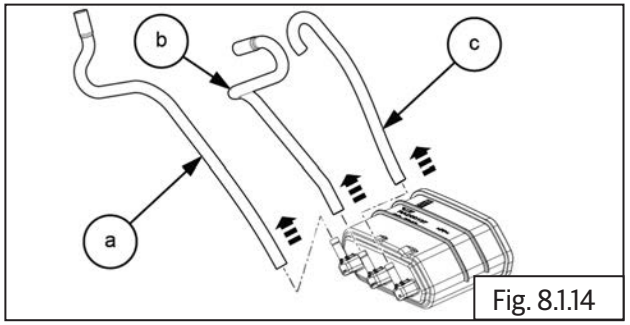

Fig. 8.1.14

Inspection

Charcoal Canister

- Clean and inspect for any damage or crack on canister. Replace if necessary.
- Gently shake canister to feel if there is wet fuel inside. If suspected replace canister.
- Blow very low pressure air (20 kPa) through the inlet port and check for the free flow of outlet side. If restricted or no air, replace the canister.

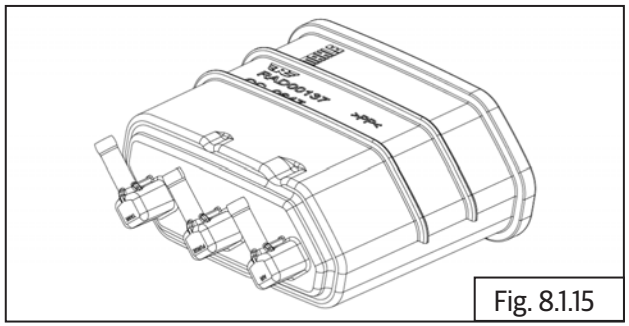
Fig. 8.1.15

Purge Valve

- Clean and visually inspect the EVAP purge valve for any damage or crack.
- Check purge valve in EMS section, replace if found defective.
- Blow low pressure air (20 kPa) through hose connecting to throttle body and check for pressure release through hose connecting to canister. If air releases, purge valve is defective and replace.

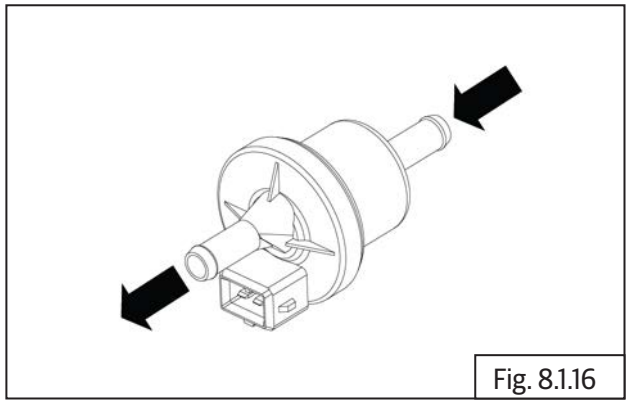
Fig. 8.1.16

Hoses

- Check hose for any crack, pinch, wear out or hardening. Replace if defective.
- Replace hoses as mentioned in periodic maintenance schedule.

Do's & Don'ts

- Do not fill fuel tank above anti-splash plate inside fuel tank as it will cause fuel to get into EVAP system.

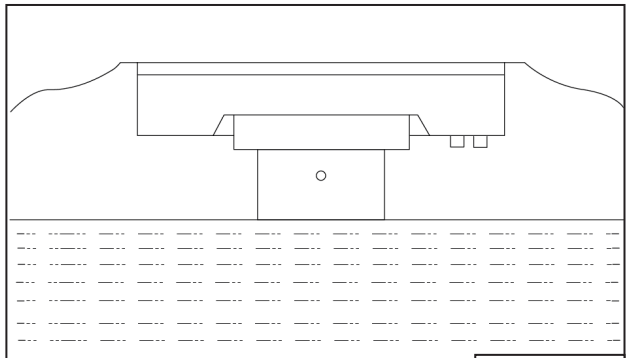
Fig. 8.1.17

- Do not use motorcycle if any part of EVAP system is damaged.
- Do check the EVAP system periodically for damages and leakages.

Assembly

8.1.4. Hoses

- Connect all hoses on canister.
- EVAP to air **(c)**
- EVAP to purge valve **(b)**
- EVAP to tank **(a)**

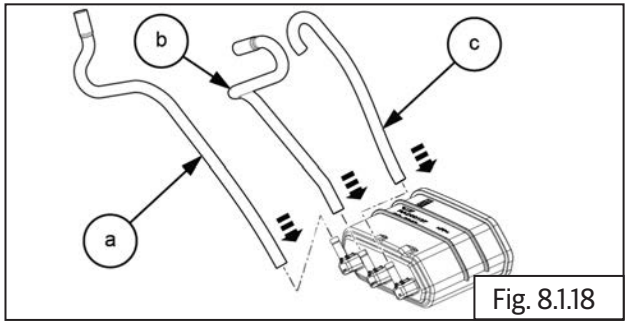

Fig. 8.1.18

8.1.5. Canister

- Locate the canister bracket **(a)** on chassis frame.

Fig. 8.1.19

- Fix the coupler clip **(a)** on canister bracket.

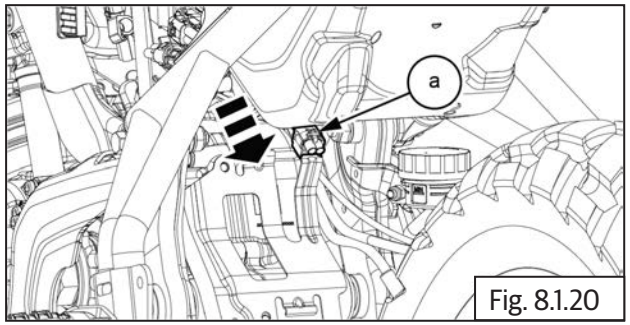

Fig. 8.1.20

- Locate and tighten the flange head bolts **2 Nos (M6) (a)** on canister bracket.

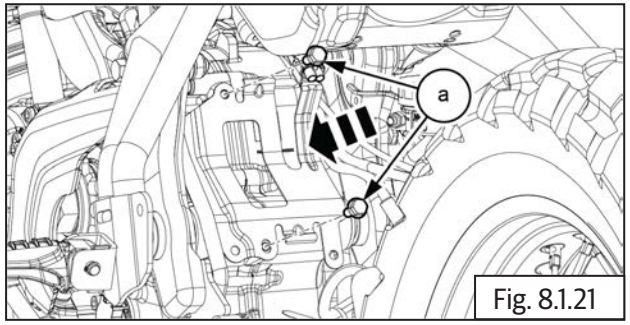

Fig. 8.1.21

	10 mm Socket with Ratchet
Torque	10 N·m / 1.0 kgf m

- Locate and place the canister with hose assembly **(a)** on chassis frame.

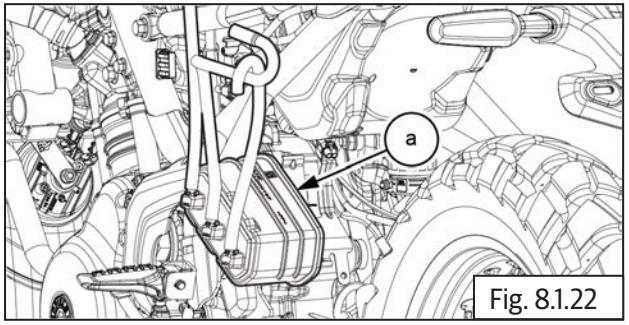

Fig. 8.1.22

NOTE
• *Please ensure the EVAP hoses are routed properly and ensure they DO NOT get pinched or damaged.*

- Fix the strap **(a)** on canister.

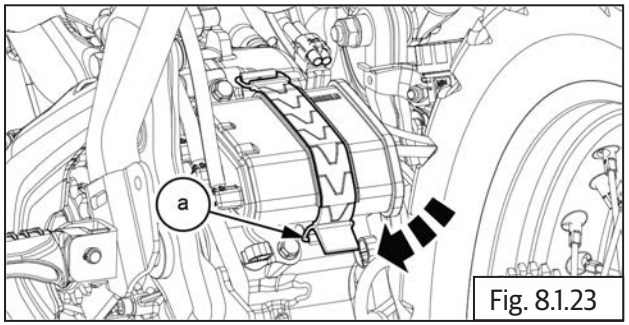

Fig. 8.1.23

- Locate the wire guide **(c)** on chassis frame .
- Locate and tighten the screw **(T40) (a)** with washer **(b)** on wire guide.

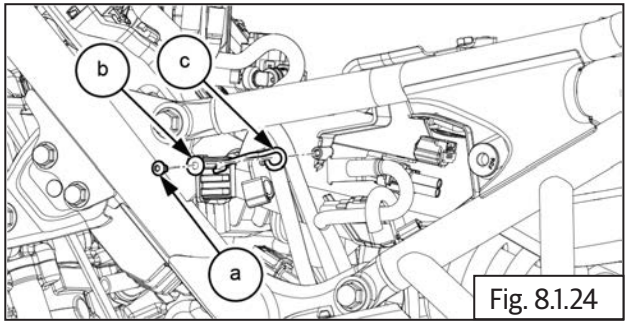

Fig. 8.1.24

	3mm Allen key
Torque	1.5N·m /0.15 kgf m

8.1.6 EVAP Purge Valve

- Connect output hose **(a)** to purge valve.

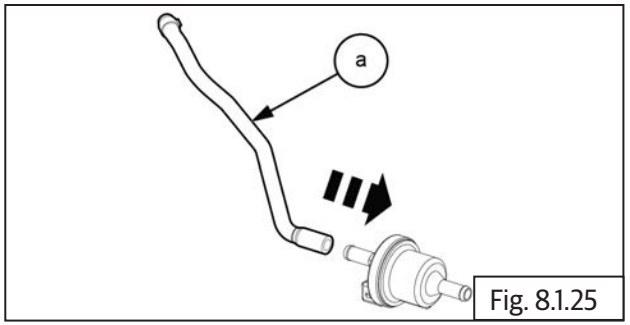

Fig. 8.1.25

- Fix purge valve into the rubber boot **(a)**.

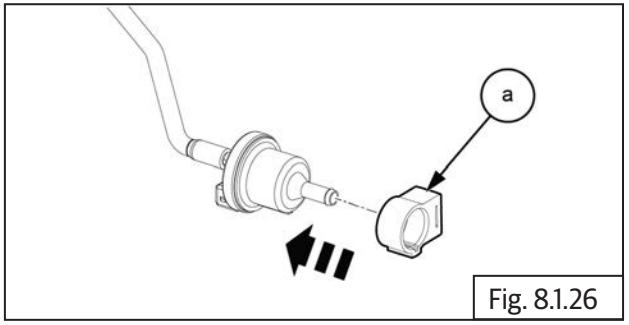

Fig. 8.1.26

- Locate the purge valve with hose assembly **(a)** on LHS chassis fame.

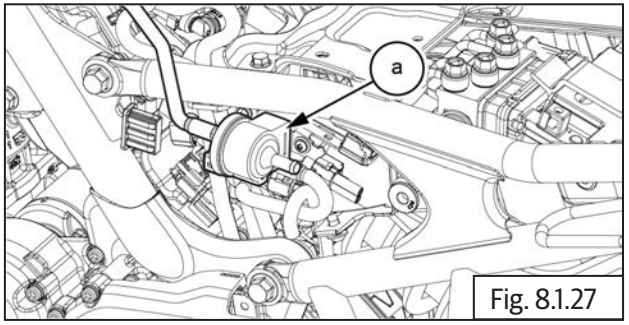

Fig. 8.1.27

- Connect input hose **(a)** to purge valve.

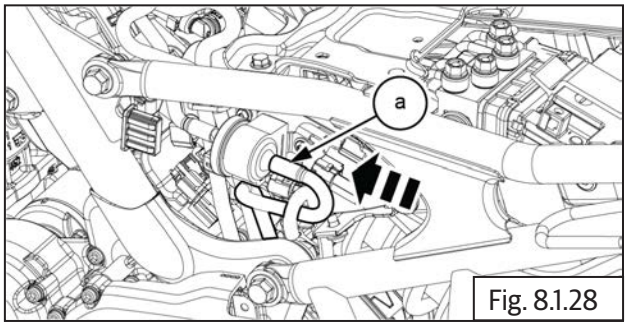

Fig. 8.1.28

- Slide and fix the purge valve with rubber boot **(a)** to the bracket.

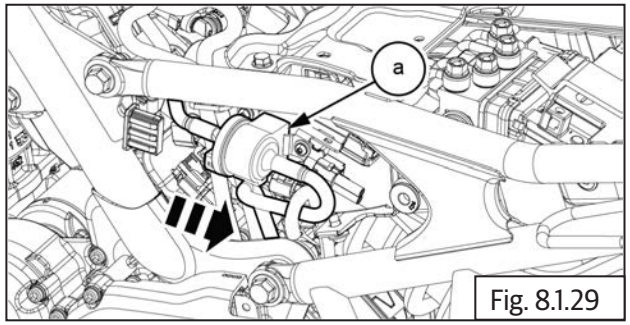

Fig. 8.1.29

- Connect hose **(a)** to throttle body.

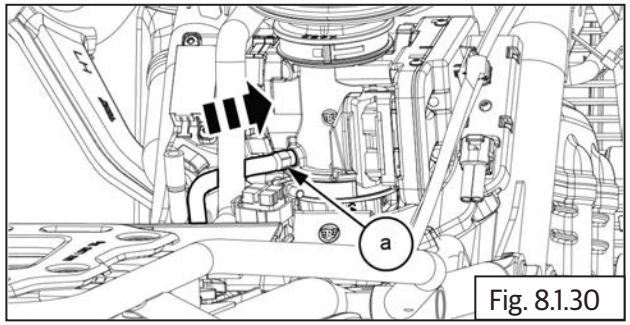

Fig. 8.1.30

- Connect electrical coupler **(a)** to purge valve.

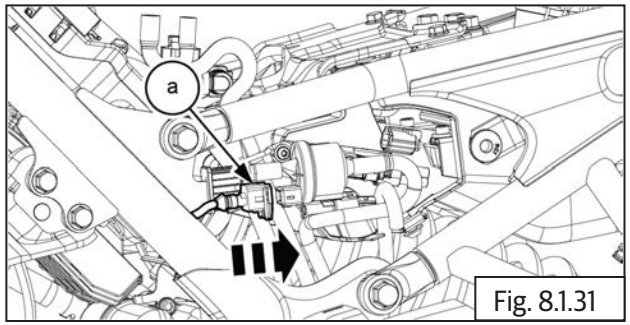

Fig. 8.1.31

8.1.7. EVAP Hose Routing Procedure

NOTE
• *Please ensure the EVAP hoses are routed properly and ensure they DO NOT get pinched or damaged.*

- The drain hose **(a)** runs on top of the EVAP bracket and down behind the frame:

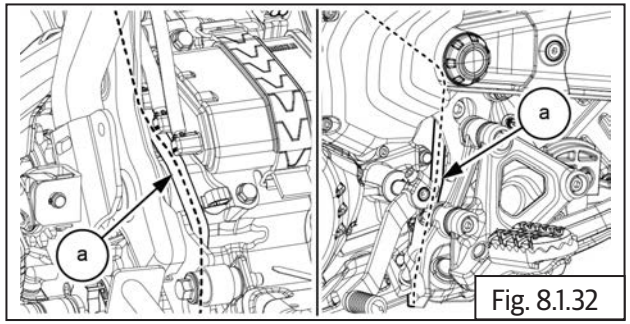

Fig. 8.1.32

- The drain pipe **(a)** is located in the hole in the sump guard:

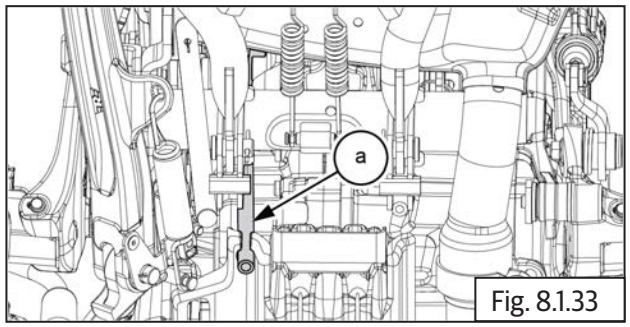

Fig. 8.1.33

- The hose from the throttle body to the purge valve is routed as follows.

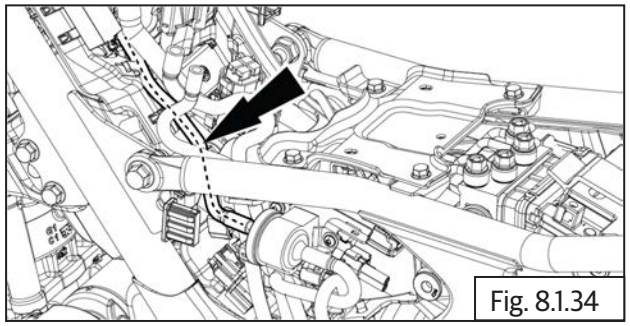
Fig. 8.1.34

- The evap hose continues straight down its connects to the canister.

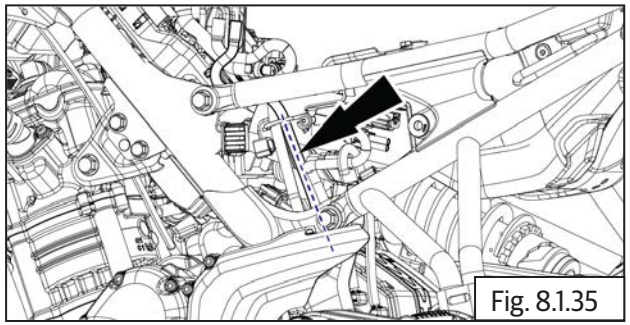
Fig. 8.1.35

- The drain and evap hoses from the tank should both be held by the wire retainer.

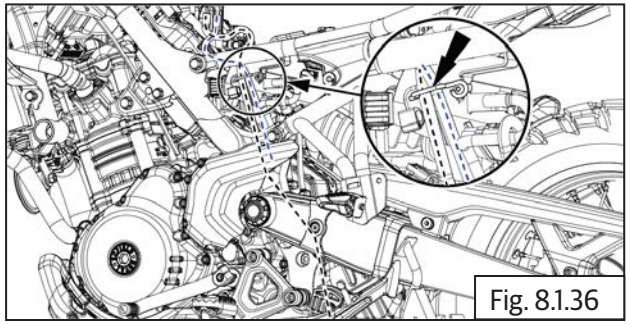
Fig. 8.1.36

- The drain **(a)** and evap **(b)** hoses come out from the fuel tank channel in the area indicated.

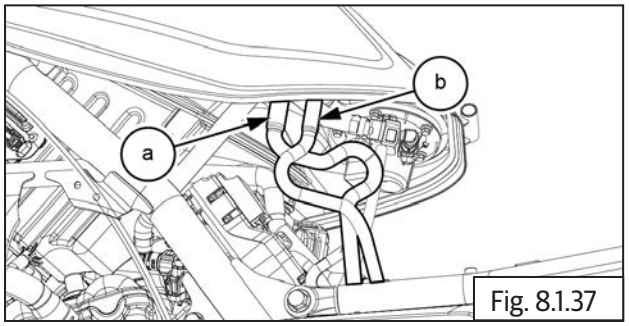

Fig. 8.1.37

- All hoses should be inside (protected by) the frame.

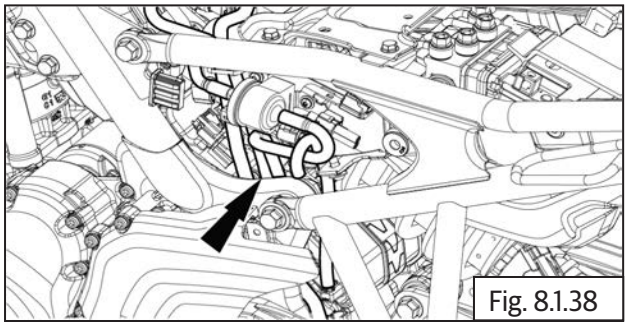
Fig. 8.1.38

- Connect battery negative (-) terminal.
- Reassemble the LHS side panel.
- Reassemble the rider and pillion seats.
- Reassemble the fuel tank.

BRAKES AND ABS

CONTENTS **PAGE**

9. Brakes and ABS 413

Dismantling..... 416

9.1.1. Master Cylinder Assembly - Front..... 416

9.1.2. Brake Caliper - Frontt..... 418

9.1.3. Brake Disc - Front..... 421

9.2. Brake - Rear..... 422

9.2.1. Master Cylinder Assembly - Rear..... 422

9.2.2. Rear Brake Pedal..... 424

9.2.3. Rear Fluid Reservoir..... 425

9.2.4. Brake Caliper Assembly - Rear..... 425

9.2.5. Brake Disc - Rear..... 428

Inspection..... 428

Assembly..... 431

Brake - Rear..... 431

9.2.6. Brake Disc - Rear..... 431

9.2.7. Brake Caliper Assembly - Rear..... 431

9.2.8. Rear Fluid Reservoir..... 434

9.2.9. Rear Brake Pedal..... 435

9.2.10. Master Cylinder Assembly - Rear..... 436

Brake - Front..... 438

9.2.11. Brake Disc - Front..... 438

9.2.12. Brake Caliper - Front..... 438

9.2.13. Master cylinder - Front..... 440

9.3 Anti-lock Braking System (ABS)..... 443

Working Principle..... 443

Functions and Specifications of the ABS Aggregates..... 444

Dismantling..... 448

9.3.1. Modulator..... 448

9.3.2. Wheel Speed Sensor - Front 454

9.3.3. Wheel Speed Sensor - Rear..... 454

Assembly..... 455

9.3.4. Wheel Speed Sensor - Rear..... 455

9.3.5. Wheel Speed Sensor - Front..... 455

9.3.6. Modulator..... 456

9.3.7 ABS DTC Codes..... 462

9.4. Preparation (Front Disc Brake)..... 464

9.5. Reassembly..... 467

9.6. Preparation (Rear Disc Brake)..... 467

9.7. Reassembly..... 468

9.8. Brake Bleeding..... 470

9.8.1. Front Brake Bleeding..... 471

9.8.2. Front Brake Fluid Leakage 475

9.8.3. Front Brake Fluid Top up..... 475

9.8.4. Rear Brake Bleeding..... 476

9.8.5. Rear Brake Fluid Leakage..... 478

9.8.6. Rear Brake Fluid Top Up..... 479

9. Brakes and ABS

Dismantling

9.1. Brake - Front

NOTE

- *Ensure the motorcycle is upright on a firm and flat surface.*

- *Before dismantling brake assembly, bleed out brake fluid . Refer brake bleeding chapter.*

⚠ WARNING

Avoid contact between brake fluid and painted parts. Brake fluid attacks paint.

NOTE

- *If brake pads are being replaced, then it is not necessary to perform system bleeding.*
- *Wheel should be dismantled only for brake disc plate removal.*

⚠ CAUTION

Whenever front brake caliper assembly is dismantled from front wheel, DO NOT depress brake lever as the piston in the caliper will move out/get misaligned.

DO NOT remove or disturb the wheel speed sensor on fork end LH.

9.1.1 Master Cylinder - Front

⚠ WARNING

Avoid contact between brake fluid and painted parts. Brake fluid attacks paint.

⚠ WARNING

Skin irritation - Brake fluid can cause skin irritation on contact.

Avoid contact with skin and eyes, and keep out of the reach of children.

Wear suitable protective clothing and goggles.

If brake fluid comes into contact with the eyes, flush the eyes thoroughly with water and consult a physician immediately.

⚠ CAUTION

Brake fluid quickly ruins painted plastic surfaces; any spilled fluid should be completely washed away immediately.

Prior Removal:

- Ensure ignition key and engine stop switch are in OFF position.
- Remove the rider and pillion seats.
- Disconnect battery negative (-) terminal.
- Remove the fuel tank.
- Rear view mirror from handlebar RH.
- Brake pressure switch connector **(a)** located on front RHS connector holder.
- Disconnect the front brake pressure switch connector **(a)**.

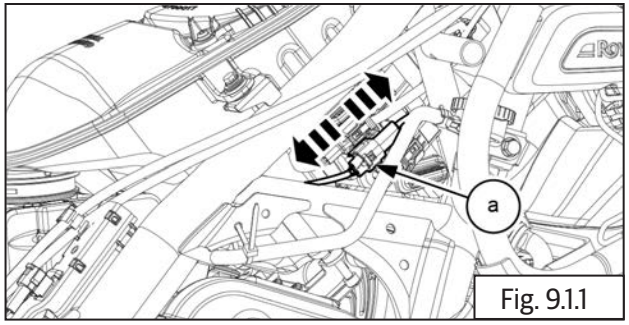

Fig. 9.1.1

- Loosen and remove hex head flange bolt **(M6)**.
- Remove harness clip **(a)** from RHS chassis frame.

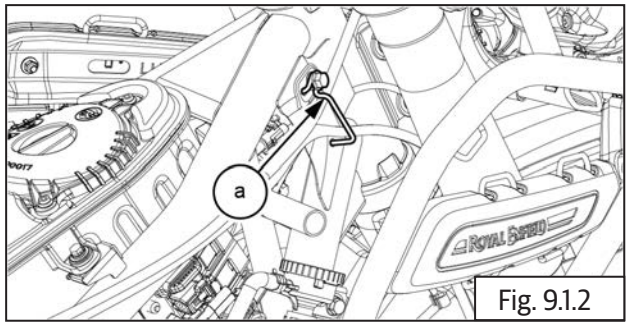

Fig. 9.1.2

	10 mm Socket with Ratchet

- Detach the double cable clips **(a)** on front brake pressure switch wiring harness.

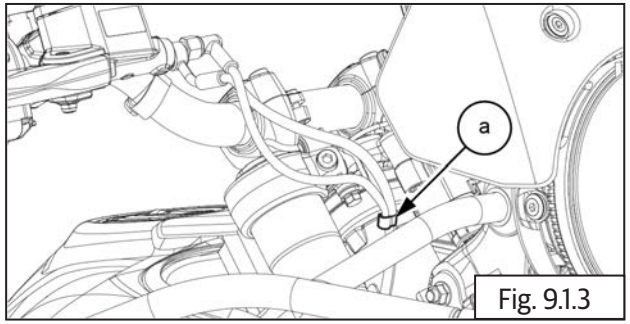

Fig. 9.1.3

- Loosen and remove the brake switch with harness **(a)**.
- Remove copper washers from front brake hose **(b)**.
- Remove the brake hose **(b)** from front master cylinder.

NOTE
• When removing the brake hose, take care not to spill the brake fluid on the painted or plastic parts. • When removing the brake hoses, temporarily secure the end of the brake hose to some high place to keep fluid loss to a minimum.

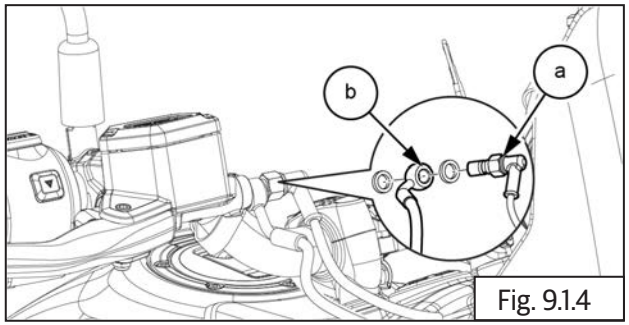

Fig. 9.1.4

	14 mm Spanner

- Hold screw **(M6) (a)** at the top of brake lever, loosen and remove hex nut at the bottom.

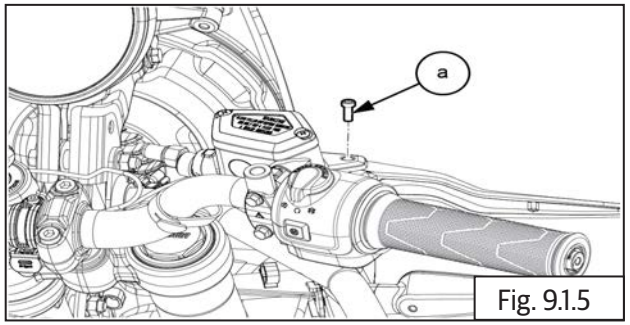

Fig. 9.1.5

	4 mm allen key and 10 mm double end spanner

- Remove brake lever **(a)** with spring **(b)** from front master cylinder.

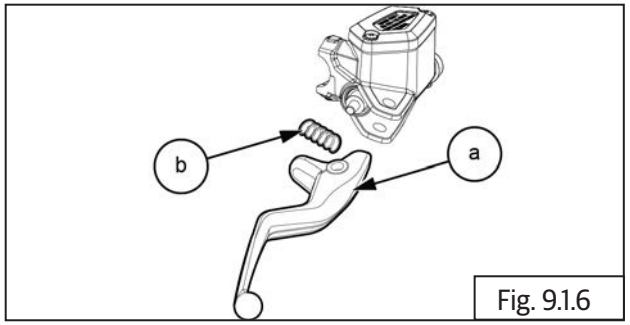

Fig. 9.1.6

- Loosen and remove 2 Nos screws from master cylinder clamp.
- Remove master cylinder and clamp from RHS handle bar.

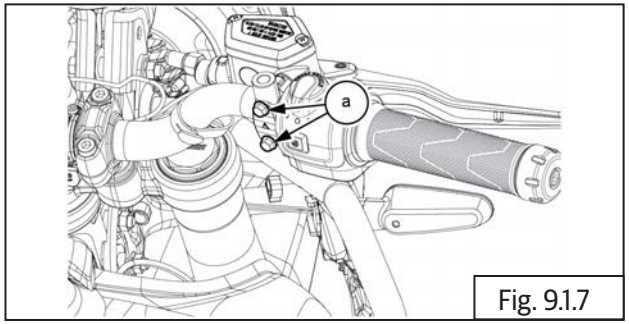

Fig. 9.1.7

	8 mm Socket with Ratchet

Dismantling Master Cylinder Front

- Remove boot **(a)** from the master cylinder assembly **(b)**.

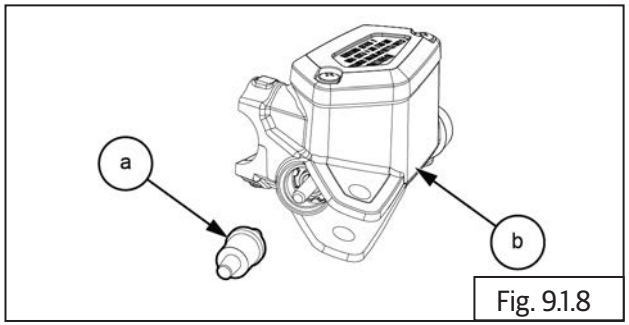

Fig. 9.1.8

	Screw driver

- Remove circlip **(a)** from the master cylinder assembly **(b)**.

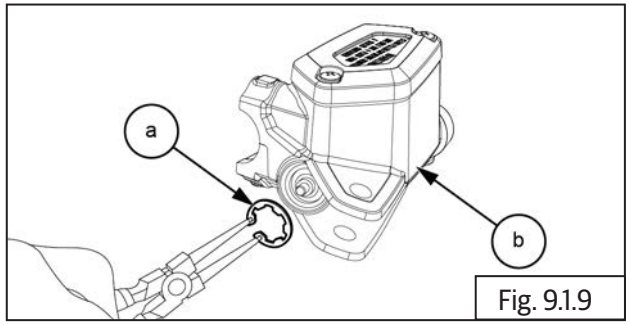

Fig. 9.1.9

	Circlip plier

- Remove piston **(e)** with secondary seal **(f)**.
- Remove primary washer **(d)** and primary seal **(c).**
- Remove spring **(a)** and spring retainer **(b).**

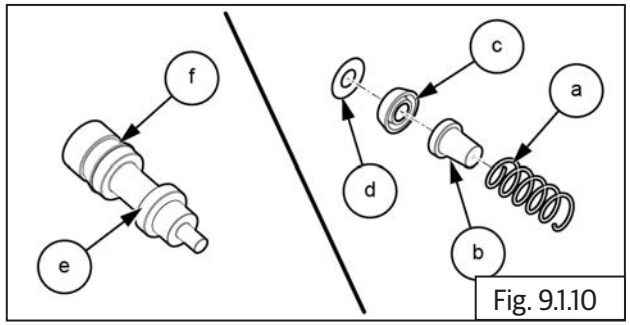

Fig. 9.1.10

⚠ CAUTION

Do not use any sharp tool to pull out the piston from the master cylinder. Pull out gently with minimum force.

⚠ CAUTION

Do not remove the secondary seal from the piston since removal will damage it.

⚠ CAUTION

Immediately wash away any brake fluid that spills.

9.1.2 Brake Caliper - Front

NOTE

- If the caliper is to be disassembled after removal and if compressed air is not available, disassemble the caliper before the brake hose is removed.

- Loosen and remove the banjo bolt with copper washers from front brake caliper.

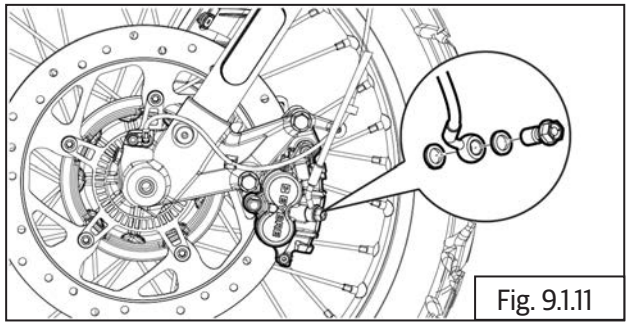

Fig. 9.1.11

	12 mm Socket with Ratchet

NOTE
• When removing the brake hose, take care not to spill the brake fluid on the painted or plastic parts. • When removing the brake hoses, temporarily secure the end of the brake hose to some high place to keep fluid loss to a minimum.

- Loosen and remove the 2 Nos **(M10) (a)** bolts from front caliper.

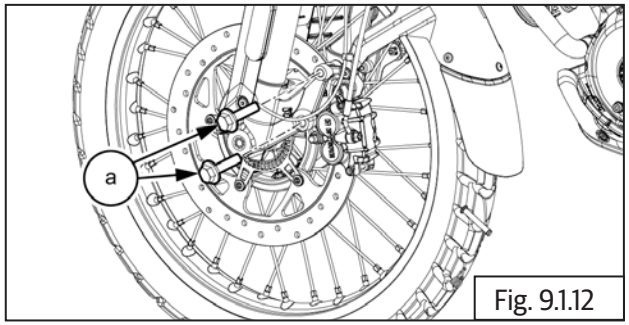

Fig. 9.1.12

	14 mm Socket with Ratchet

- Gently slide out front brake caliper assembly from front LH fork.
- Remove brake pad lock clip **(a)** from brake caliper assembly **(b)**.

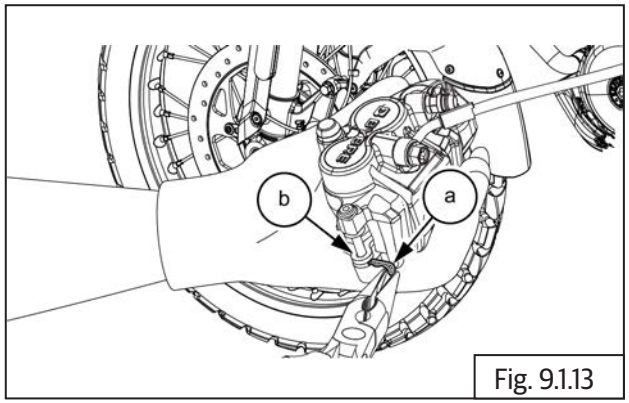

Fig. 9.1.13

	Nose plier

- Suitably support caliper and correctly tap brake pad pin **(a)** from inner side to outside.

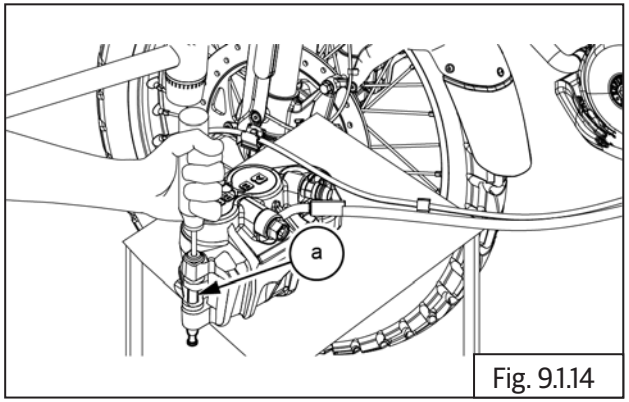

Fig. 9.1.14

- Once pin **(a)** is free, gently pull out pin from brake caliper.

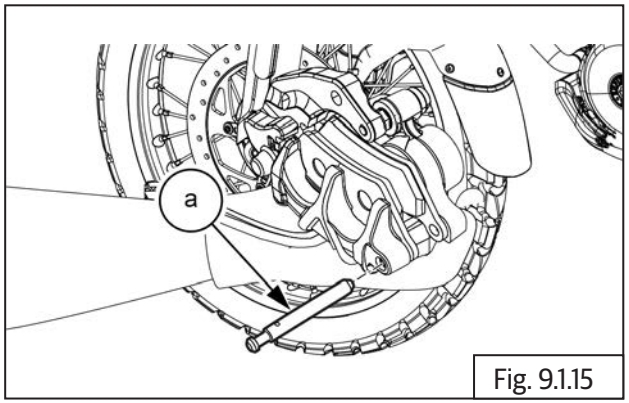

Fig. 9.1.15

- Slide out and remove brake pads **(a)** from brake caliper front **(b)**.

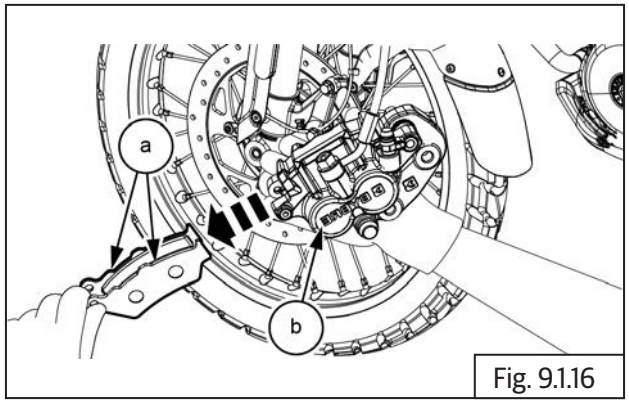

Fig. 9.1.16

Dismantling Front Brake Caliper

- Remove the pad tensioner spring plate **(a)**.

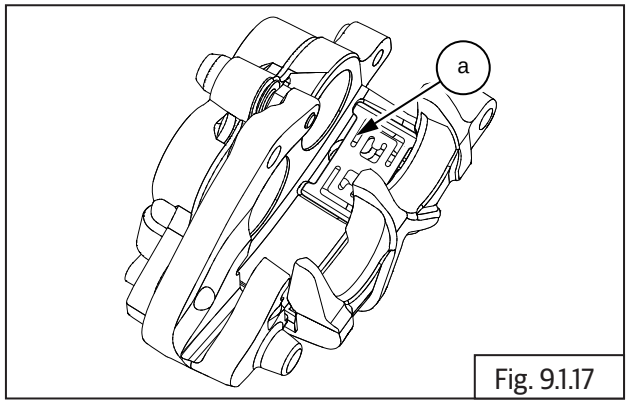

Fig. 9.1.17

- Remove mounting bracket from caliper assembly.

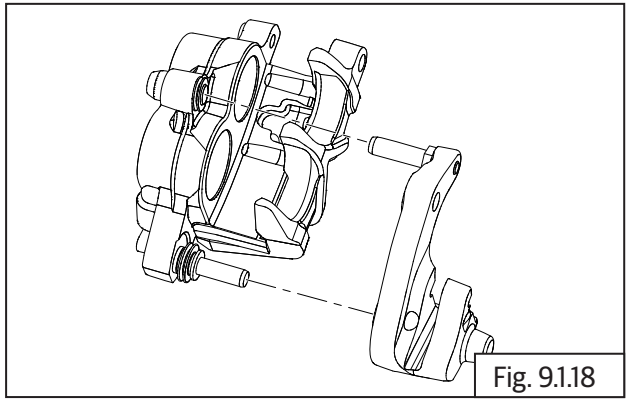
Fig. 9.1.18

- Remove the dust boots **(b)** and **(d)** from caliper assembly.
- Remove caliber slide pins **(a)** and **(c)**.

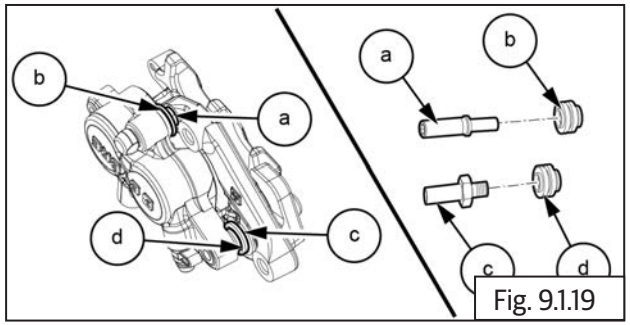

Fig. 9.1.19

	11mm ring spanner 5mm Allen Key

- Remove rattle clip **(a)** from caliber.

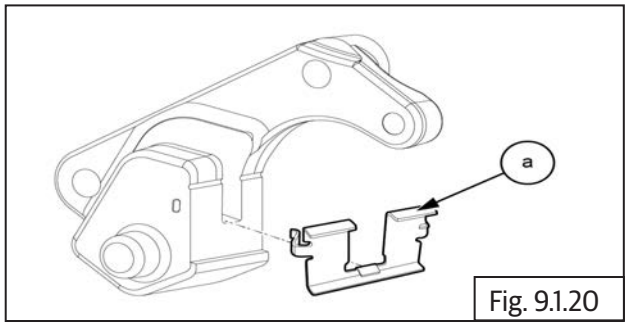

Fig. 9.1.20

- Position caliper body with the pistons down and apply small squirts of air pressure to fluid inlet hole to remove pistons.

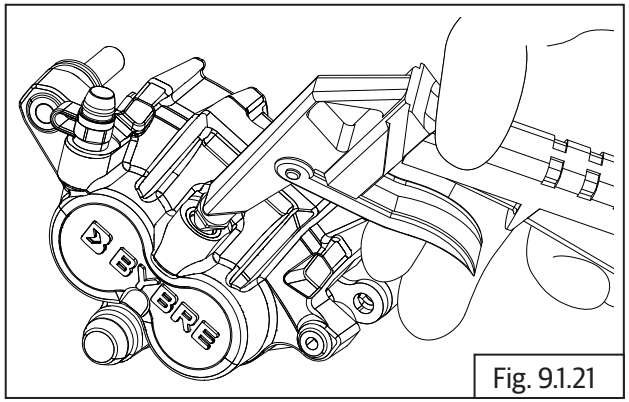
Fig. 9.1.21

⚠ WARNING

To avoid serious injury, never place your fingers or palm in front of the piston. If you apply compressed air into the caliper, the piston may crush your hand or fingers.

⚠ CAUTION

Do not use high pressure air or bring the nozzle too close to the inlet. Place a shop towel over the pistons to prevent the pistons from becoming projectiles. Push the dust seals and piston seals in and lift them out using a blunt tool. Care should be taken to avoid any damages on the bore of the sliding surface.

Enough care should be taken to avoid damages of the piston OD while servicing/handling. Remove the bleed screw.

- Remove the pistons 2Nos **(a)** from caliber.
- Remove dust seals 2Nos **(b)** from the caliber.
- Remove fluid seals 2Nos **(c)** from the caliber.

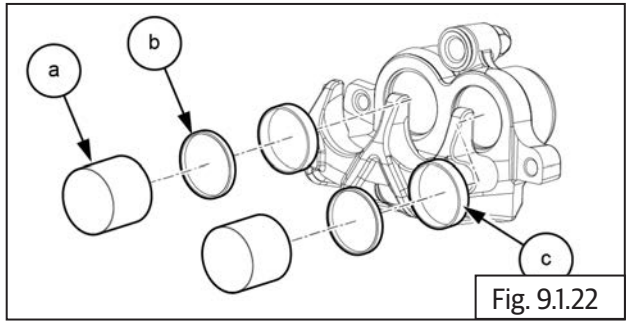

Fig. 9.1.22

9.1.3. Brake Disc - Front

- Remove front wheel assembly.
- Ensure wheel assembly is placed on a flat surface with disc plate facing upwards.

⚠ WARNING

DO NOT place/store the wheel with disc facing downward. It will damage the disc warpage.

⚠ CAUTION

Place a soft cloth under the wheel hub center mounting hole area to prevent damage.

- Loosen and remove **5 Nos** button head bolts **(M8)** **(a)** holding disc plate to hub, in crisscross pattern.

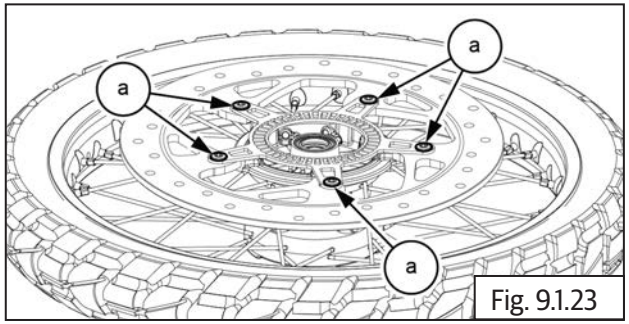

Fig. 9.1.23

	5 mm Allen socket with Ratchet

⚠ CAUTION

Avoid any bends or damages to the toner wheel as it will affect the functioning of ABS.

- Remove toner wheel **(a)** from hub.

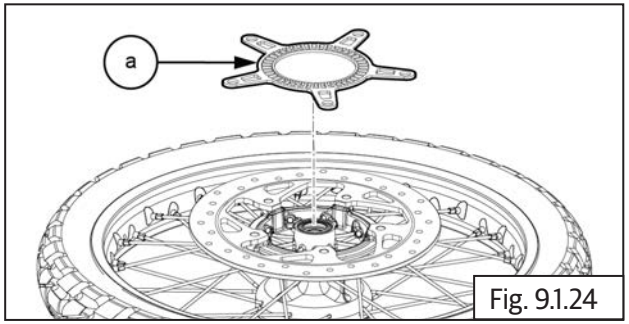

Fig. 9.1.24

- Remove brake disc **(a)** from hub.

⚠ CAUTION

Ensure the brake disc does not get damaged as it will affect the brake efficiency.

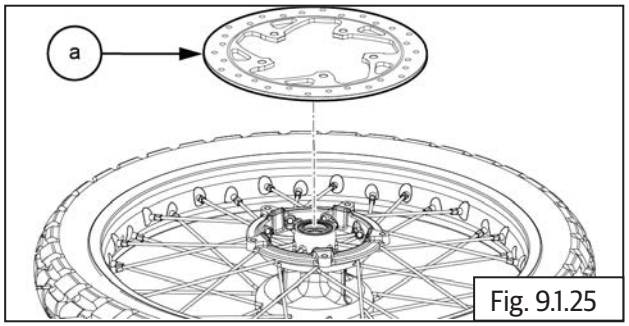

Fig. 9.1.25

⚠ CAUTION

Avoid any bends or damages to the brake disc as it will have serious effects on braking efficiency and will lead to juddering.

9.2. Brake - Rear

NOTE

- *Ensure the motorcycle is upright on a firm and flat surface.*

- Locate a scissor jack under the engine and lift motorcycle such that the front wheel is off the ground.

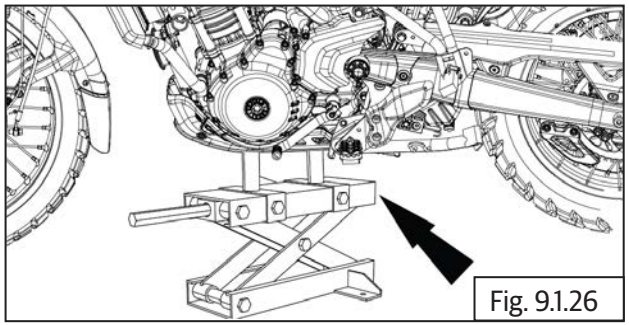

Fig. 9.1.26

9.2.1. Master Cylinder Assembly - Rear

- Slide the reservoir hose clamp **(a)**.
- Pull off the reservoir hose lower end, and drain the brake fluid into a container.

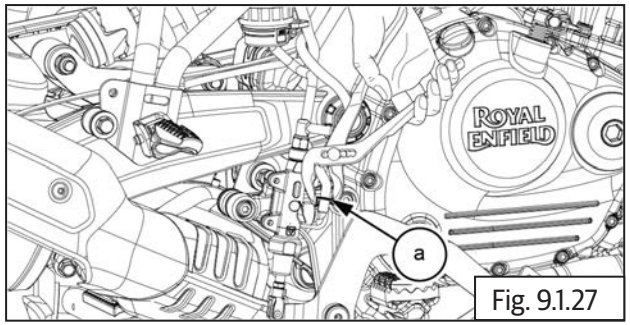

Fig. 9.1.27

	Plier

- Disconnect rear brake pressure switch coupler **(a)**.

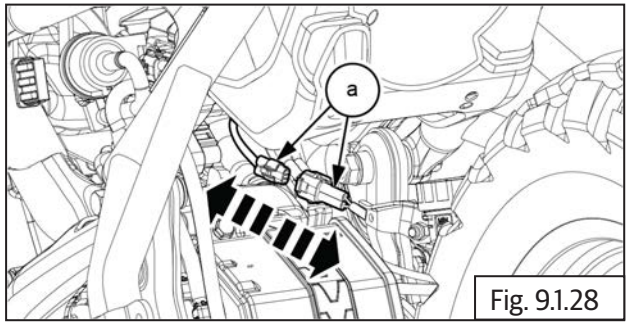

Fig. 9.1.28

- Detach the double cable clips 2 Nos **(a)** from pressure switch harness.

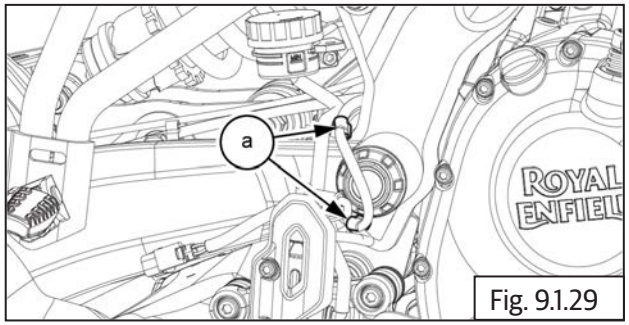

Fig. 9.1.29

- Remove the 2Nos cap bolts **(M6) (a)** from heel guard.

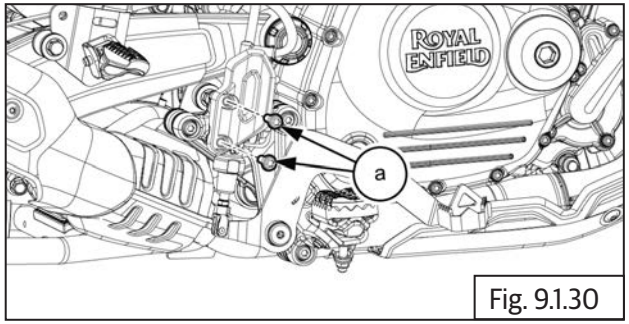

Fig. 9.1.30

	5mm Allen key

- Remove the heel guard **(a)**.

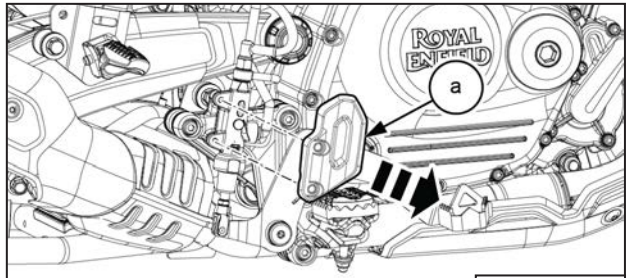

Fig. 9.1.31

- Just remount the head screw on master cylinder.
- Loosen and remove the rear brake pressure switch **(a)** and ABS hose **(b)**.

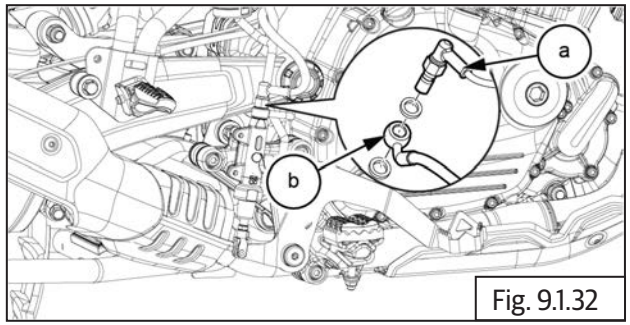

Fig. 9.1.32

	14mm Double End spanner

- Remove the clevis spring pin **(a)** from master cylinder.

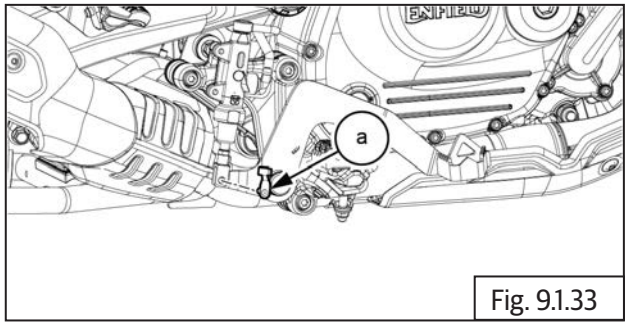

Fig. 9.1.33

	Nose plier

- Loosen and remove 2 Nos. Hex socket head bolts to detach master cylinder assembly **(a)** .

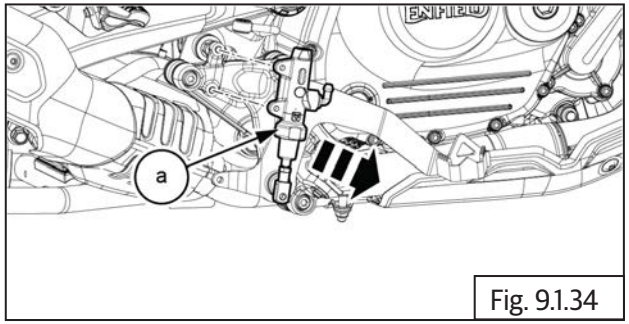

Fig. 9.1.34

Dismantling Rear Brake Master Cylinder

- Loosen and remove the push rod nut.

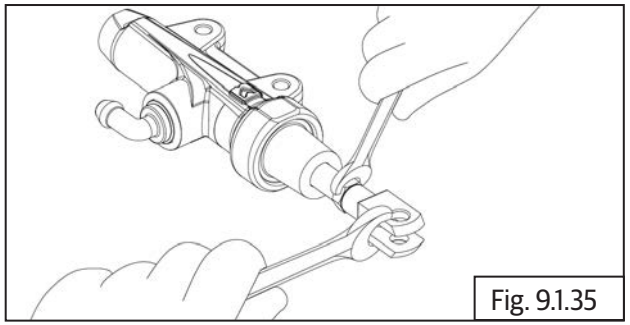

Fig. 9.1.35

	10mm and 12mm double end spanner

- Remove protective rubber boot **(a)** from master cylinder.

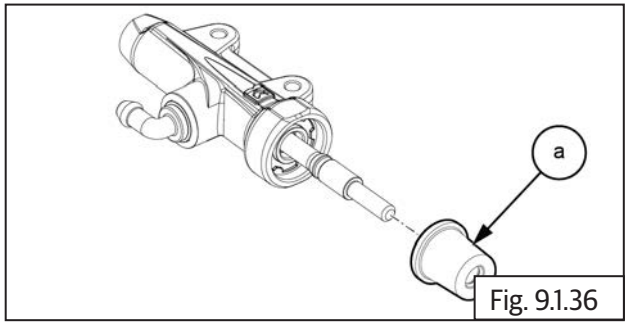

Fig. 9.1.36

	Screw driver

- Remove **(a)** circlip from the master cylinder body **(b)**.

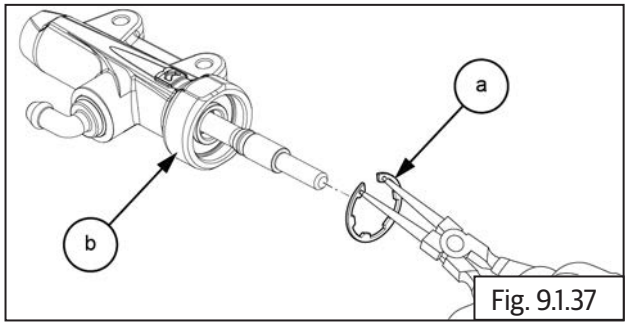

Fig. 9.1.37

	Circlip plier

- Remove stopper washer **(a)** from master cylinder **(b)**.

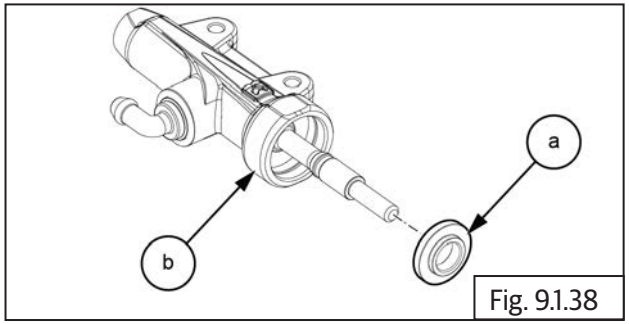

Fig. 9.1.38

- Remove push rod **(a)** from master cylinder.

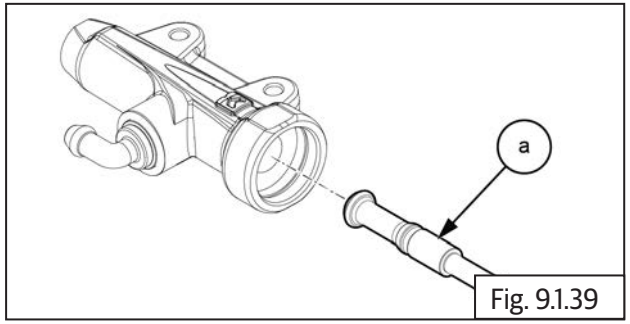

Fig. 9.1.39

- Remove piston **(e)** with secondary seal **(f)**.
- Remove primary washer **(d)** and primary seal **(c).**
- Remove spring **(a)** and spring retainer **(b).**

⚠ CAUTION

Do not use any sharp tool to pull out the piston from the master cylinder. Pull out gently with minimum force.

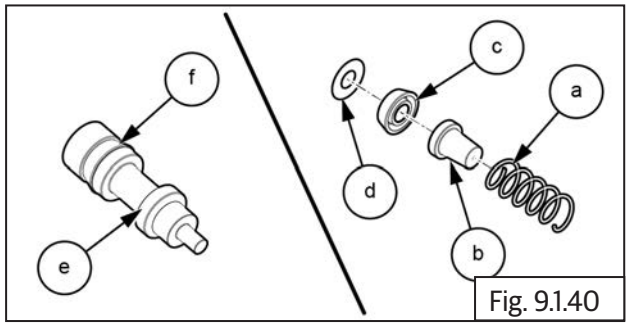

Fig. 9.1.40

⚠ CAUTION

Do not remove the secondary seal from the piston since removal will damage it.

⚠ CAUTION

Immediately wash away any brake fluid that spills.

9.2.2. Rear Brake Pedal

- Loosen and remove Hex socket bolt with nut **(M8) (a) (b)** to detach brake pedal.

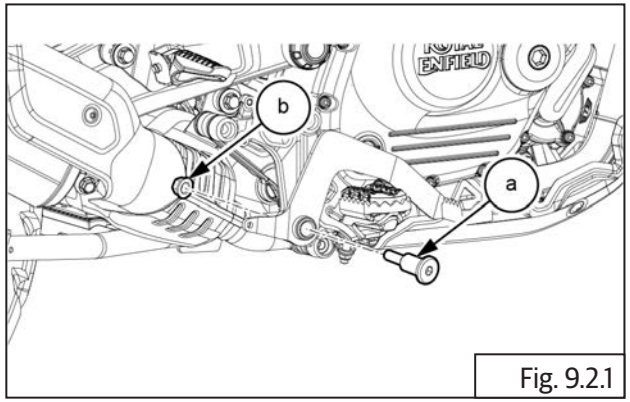

Fig. 9.2.1

	6 mm Allen socket and 12 double end spanner.

- Remove pedal **(a)** from LHS control plate
- Remove spring **(b)** and bush **(c)** from brake pedal.

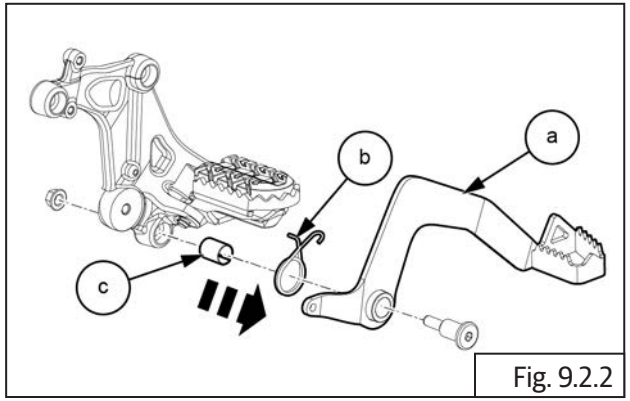

Fig. 9.2.2

9.2.3. Rear Fluid Reservoir

- Loosen and remove Hex socket bolt **M6 (a)** to remove fluid reservoir **(b)**.

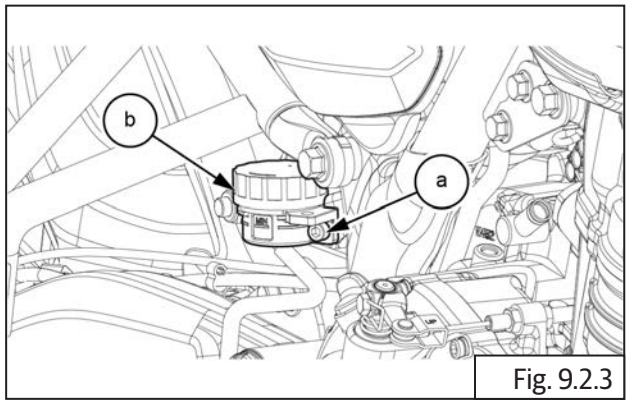

Fig. 9.2.3

	4 mm Allen socket with Ratchet

- Open the cap **(a)** from reservoir **(b)**.

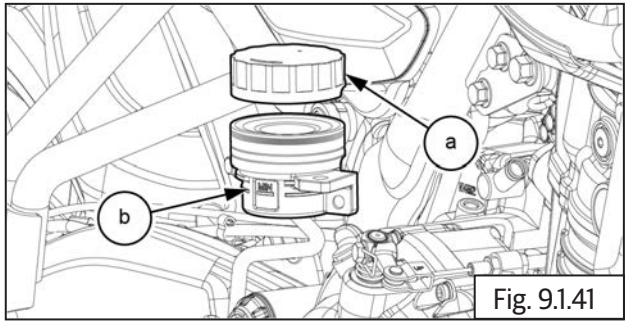

Fig. 9.1.41

- Take out plate diaphragm **(a)** and diaphragm **(b)** from reservoir.

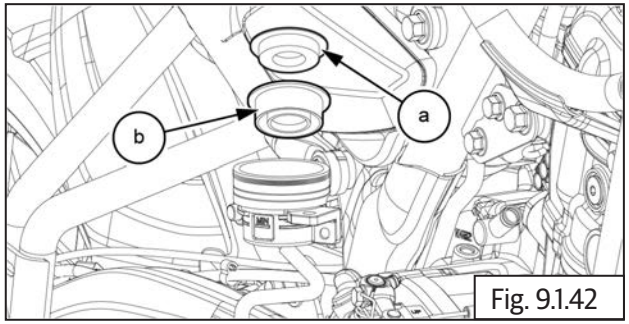

Fig. 9.1.42

- Slide the clip **(a)** and detach hose from reservoir.

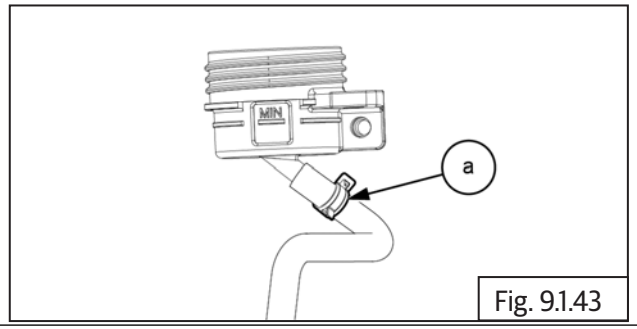

Fig. 9.1.43

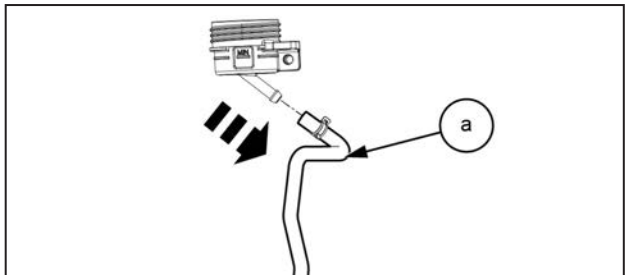

Fig. 9.1.44

9.2.4. Brake Caliper Assembly - Rear

- Remove the following:
  - Remove spindle bolt from rear wheel.

NOTE
• *If brake pads are being replaced, then it is not necessary to perform system bleeding.* • *Wheel should be dismantled only for brake disc plate removal.*

- Loosen and remove the banjo bolt **(a)** with copper and ABS hose **(b)** from rear brake caliper.

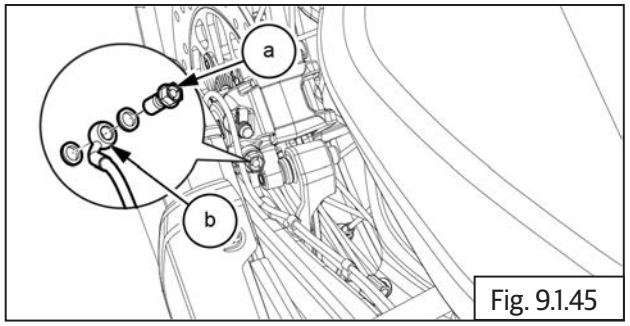

Fig. 9.1.45

	12 mm Socket with Ratchet

NOTE
• When removing the brake hose, take care not to spill the brake fluid on the painted or plastic parts. • When removing the brake hoses, temporarily secure the end of the brake hose to some high place to keep fluid loss to a minimum.

- Loosen and remove Hex socket head screw **(M6)** **(a)** located below brake caliper on RH rear wheel.

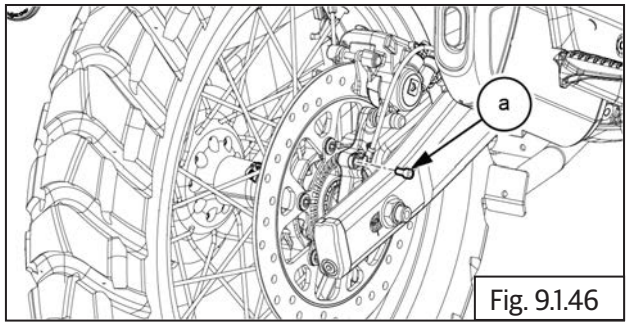

Fig. 9.1.46

	5 mm Allen socket with Ratchet

- Gently remove rear wheel speed sensor ABS **(a)** from caliper.

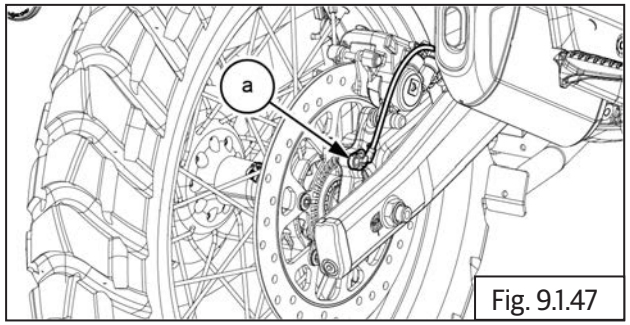

Fig. 9.1.47

- Open the bleeder cap **(a)** from caliper **(b)**.

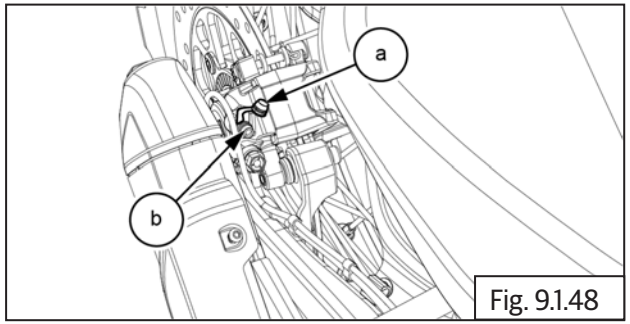

Fig. 9.1.48

- Remove clip **(a)** from brake caliper.

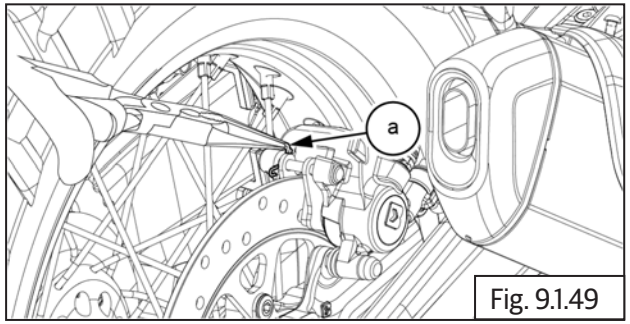

Fig. 9.1.49

	Nose plier

- Remove pin **(a)** from brake caliper.

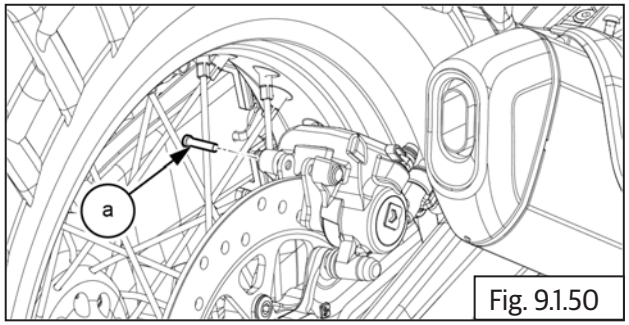

Fig. 9.1.50

	Nose plier

- Slide out and remove brake pads **(a)** from brake caliper.

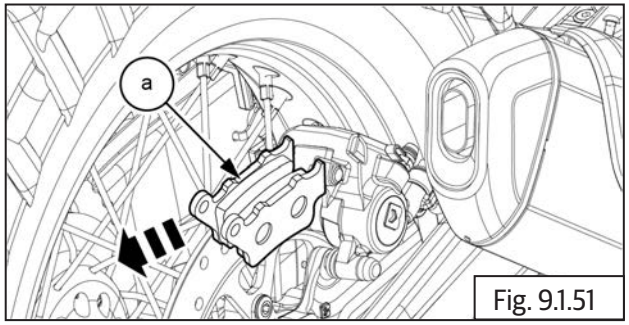

Fig. 9.1.51

NOTE
• If the caliper is to be disassembled after removal and if compressed air is not available, disassemble the caliper before the brake hose is removed.

- Slide out and remove brake caliper **(a)** with holder.

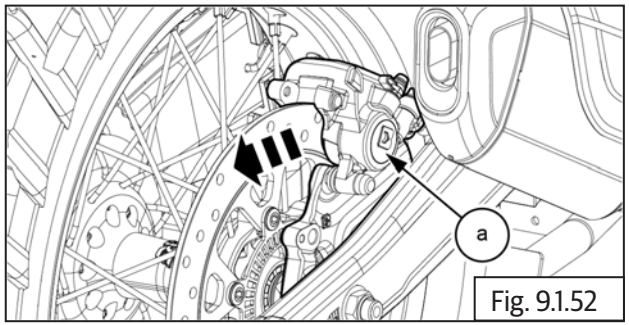

Fig. 9.1.52

Dismantling Rear Brake Caliper

- Remove the brake pad spring **(a)**.

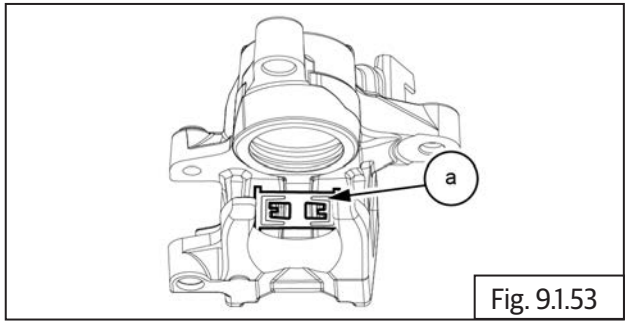

Fig. 9.1.53

- Separate the mounting bracket from the caliper assembly by gently pull.

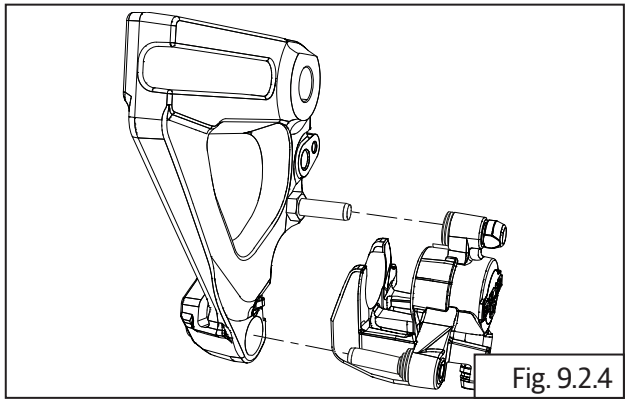
Fig. 9.2.4

- Remove the dust boots **(b)** and **(d)** from caliper assembly.
- Remove caliber slide pins **(a)** and **(c)**.

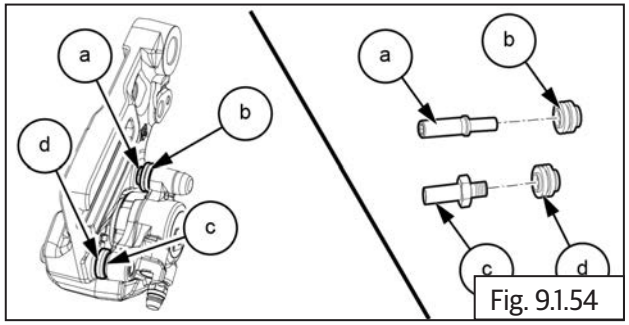

Fig. 9.1.54

	11mm ring spanner 5mm Allen Key

- Remove rattle clip **(a)** from caliber.

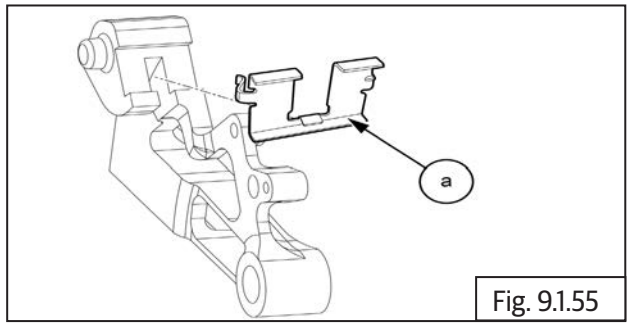

Fig. 9.1.55

- Position caliper body with the pistons down and apply small squirts of air pressure to fluid inlet hole to remove pistons.

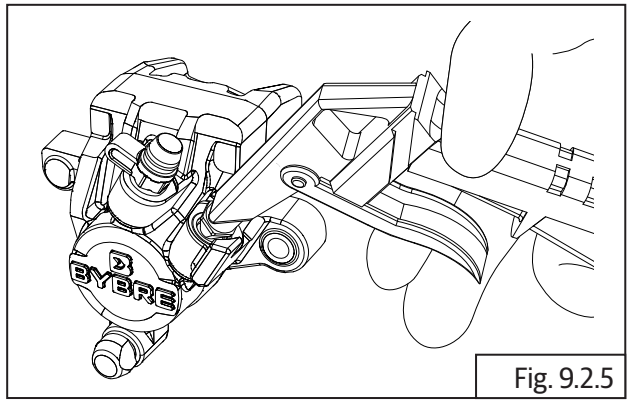

Fig. 9.2.5

⚠ WARNING
To avoid serious injury, never place your fingers or palm in front of the piston. If you apply compressed air into the caliper, the piston may crush your hand or fingers.

⚠ CAUTION

Do not use high pressure air or bring the nozzle too close to the inlet. Place a shop towel over the pistons to prevent the pistons from becoming projectiles. Push the dust seals and piston seals in and lift them out using a blunt tool. Care should be taken to avoid any damages on the bore of the sliding surface.

Enough care should be taken to avoid damages of the piston OD while servicing/handling. Remove the bleed screw.

- Remove the pistons **(a)** from caliber.
- Remove dust seals **(b)** from the caliber.
- Remove fluid seals **(c)** from the caliber.

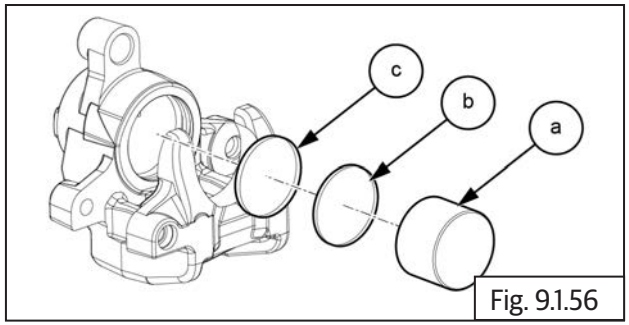

Fig. 9.1.56

9.2.5. Rear Wheel and Brake Disc

- Remove the rear wheel.
- Loosen and remove 6 Nos **(M8) (a)** bolts to remove ABS toner wheel.

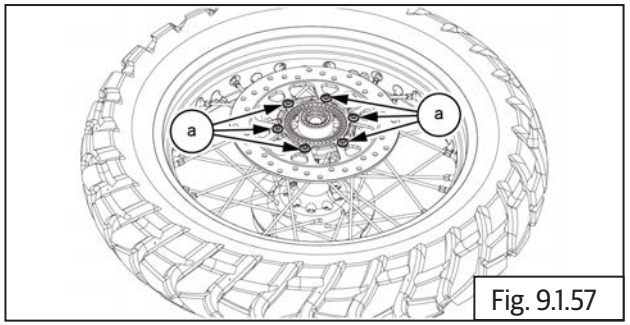

Fig. 9.1.57

	6 mm Allen socket with Ratchet

- Remove ABS toner wheel **(a)** from rear wheel hub RH.

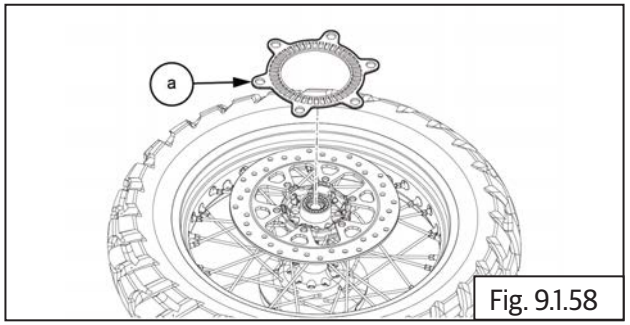

Fig. 9.1.58

- Remove rear brake disc **(a)** from the rear wheel hub RH.

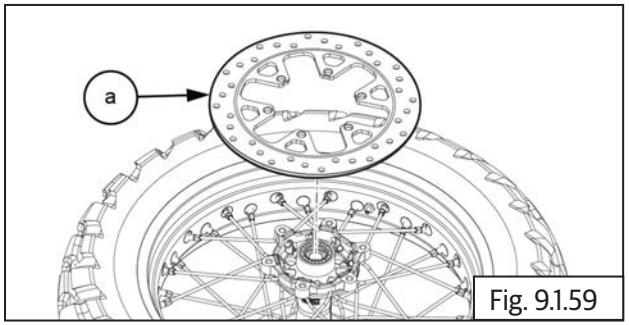

Fig. 9.1.59

Inspection

Front Wheel and Brake Disc

- Inspect for rust, deep scoring, any foreign materials, burn marks crack in the mounting location of brake disc.
- Inspect brake disc thickness and run-out. Measure depth at points where scoring is found on the discs and replace if there is excess wear.
- Also measure thickness at the points indicated in the illustration and replace disc if out of specifications.

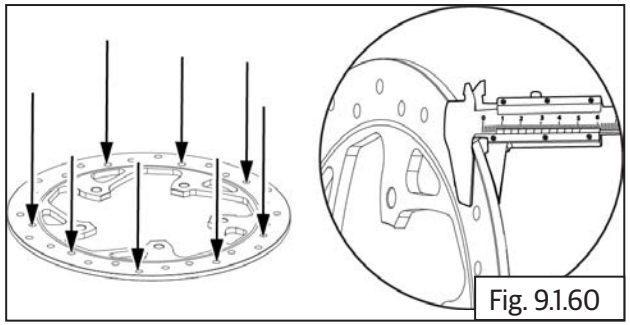

Fig. 9.1.60

	Vernier caliper

Service limit	5.4 mm

- Place brake disc rotor on a flat surface and inspect war page. Replace if it is out of specifications.

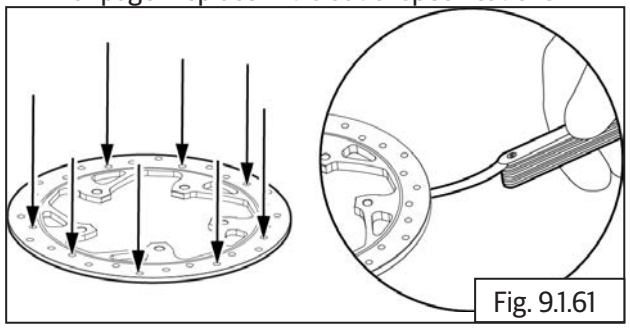

Fig. 9.1.61

	Feeler gauge

Standard	0.00 mm
Service limit	Max Runout - 0.15 mm

- Inspect and replace toner wheel plate if there are any damages or bends.

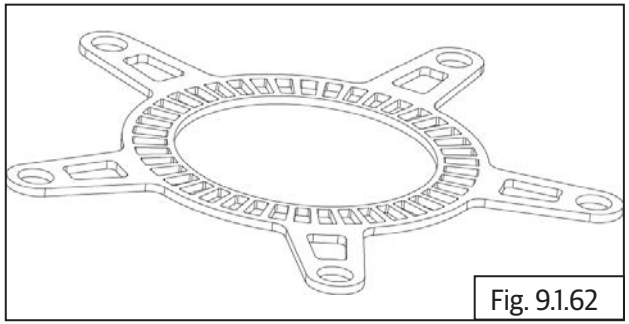

Fig. 9.1.62

Rear Wheel and Brake Disc

- Inspect ABS toner wheel for any bends or damages.
- Place ABS toner wheel on a flat surface and check war page. Replace if out of specifications.

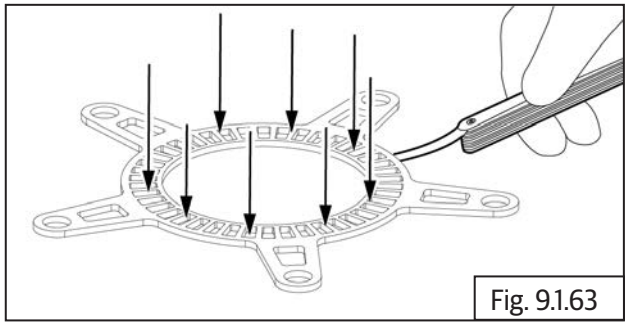

Fig. 9.1.63

	Feeler gauge

Standard	0.00 mm
Service limit	0.3 mm (Maximum)

- Inspect for rust, deep scoring, any foreign materials, burn marks crack in the mounting location of brake disc.
- Inspect brake disc thickness and run-out. Measure depth at points where scoring is found on the discs and replace if there is excess wear.
- Also measure thickness at the points indicated in the illustration and replace disc if out of specifications.

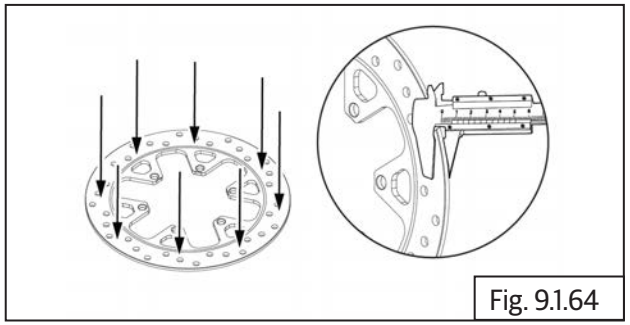

Fig. 9.1.64

	Vernier caliper

Service limit	4.5 mm (Minimum)

- Place brake disc rear on a flat surface and check war page. Replace if out of specifications.

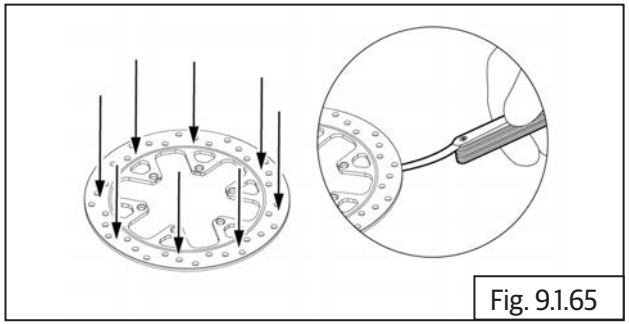

Fig. 9.1.65

	Feeler gauge

Standard	0.00 mm
Service limit	Min Runout - 0.15 mm

- The pads need to be replaced if a brake pad is worn to the indicator.

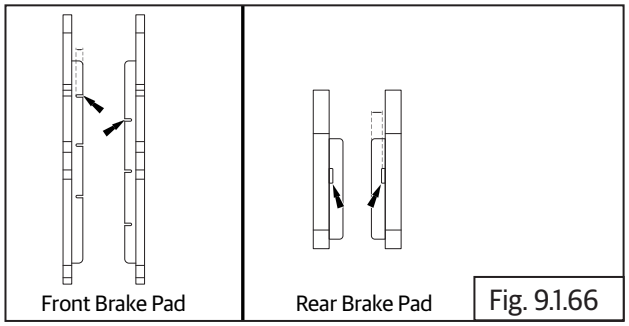

Fig. 9.1.66

Front

- Check that the brake fluid reservoir is horizontal and that the fluid level is center of the window **(a)** consider as a minimum level.

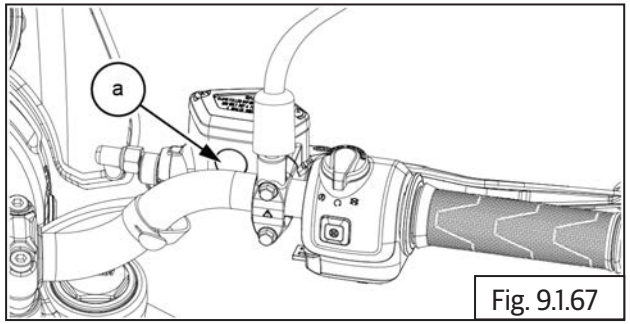

Fig. 9.1.67

Rear

- Check that the brake fluid reservoir is horizontal and that the fluid level is between the "MAX" level and "Min" level marks.

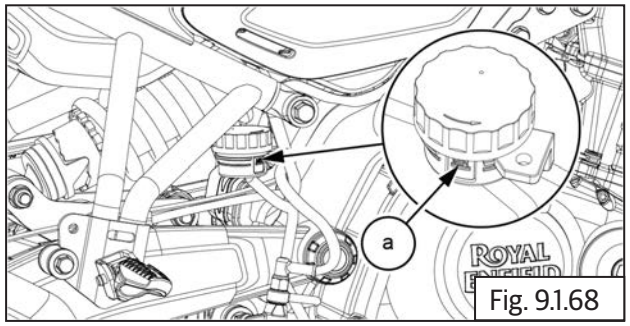

Fig. 9.1.68

⚠ CAUTION

DO NOT mix DOT 4 and other brake fluids together

- Inspect brake lever front free play and brake pedal rear **(a)** free play. If free play is spongy, check brake pads for wear or tear and replace and follow brake bleeding procedure.

Front

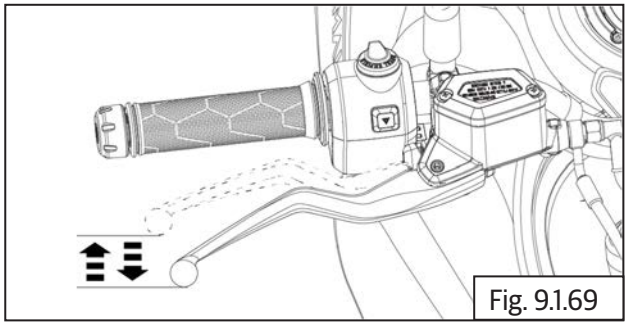

Fig. 9.1.69

Rear

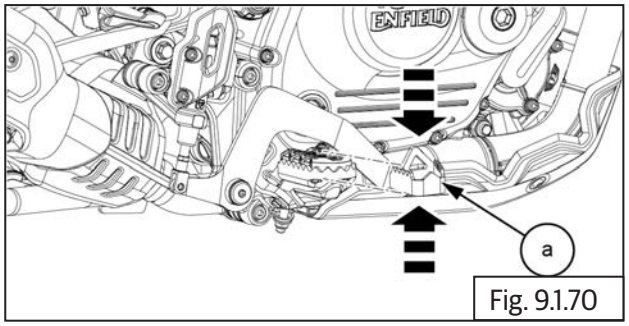

Fig. 9.1.70

- Inspect and replace front and rear brake hoses **(a)** if they have any cracks, leakages or damages.

Front

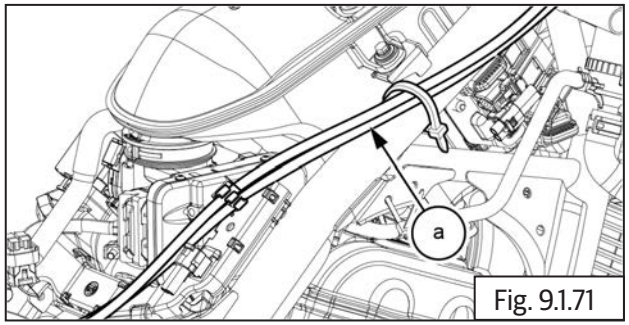

Fig. 9.1.71

Rear

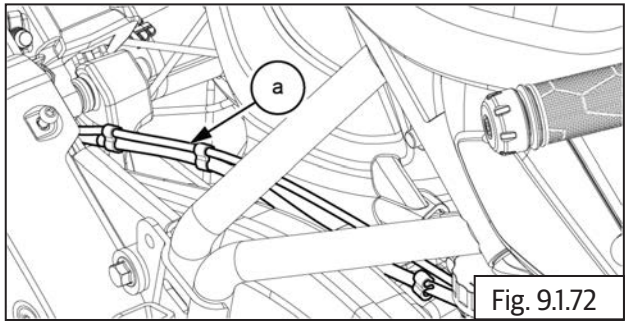

Fig. 9.1.72

NOTE
• *Ensure the motorcycle is upright on a firm and flat surface.*

Assembly

Brake - Rear

9.2.6. Brake Disc - Rear

- Assemble rear brake disc **(a)** into rear wheel hub RH .

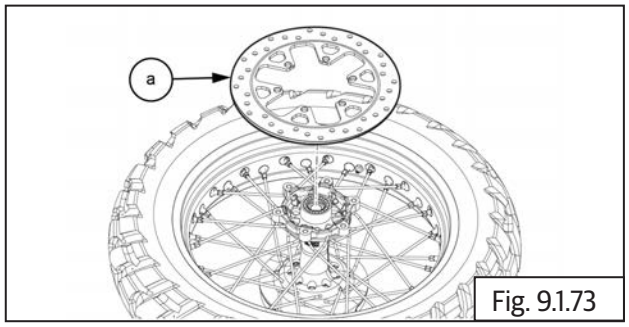

Fig. 9.1.73

- Assemble ABS toner wheel **(a)** into rear brake disc on rear wheel hub RH.

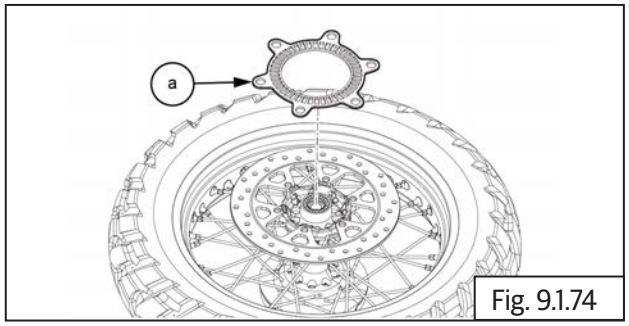

Fig. 9.1.74

- locate and tighten **6 Nos (M8) (a)** bolts into rear wheel disc hub RH.

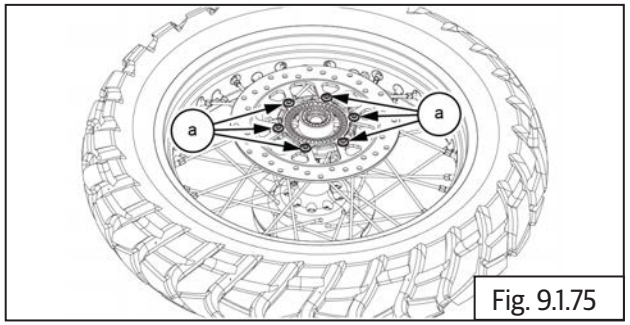

Fig. 9.1.75

NOTE
• *Disc bolts are should be used one time only. DO NOT reuse.*

	6 mm Allen socket with Ratchet
Torque	25 N-m/ 2.5 kgf-m

- Assemble drive chain and rear wheel into swing arms.

9.2.7 Brake Caliper Assembly - Rear

Assembling Rear Brake Caliper

- Coat fresh brake fluid on new dust seals and piston seals.

- Install piston seals in the inner groove **(c)** and dust seals in the outer groove **(b)** in the bore in caliper assembly.
- Coat the caliper cylinder and piston **(a)** with fresh brake fluid.
- Insert the closed end of the piston **(a)** into the caliper bore and gently press it into caliper fully till the open ends of the piston are flush with the caliper bore outer edge

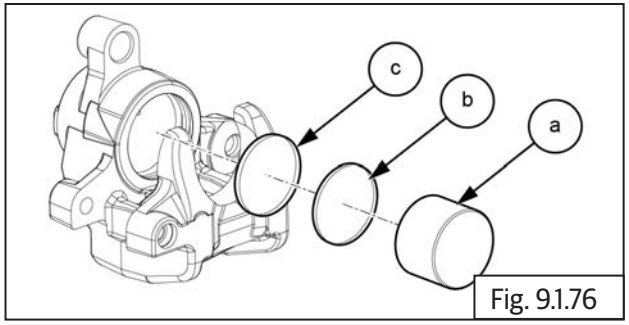

Fig. 9.1.76

⚠ CAUTION

DO NOT apply force while assembling the piston into the caliper. Press only with minimal hand pressure.

- Locate the rattle clip **(a)** on caliber.

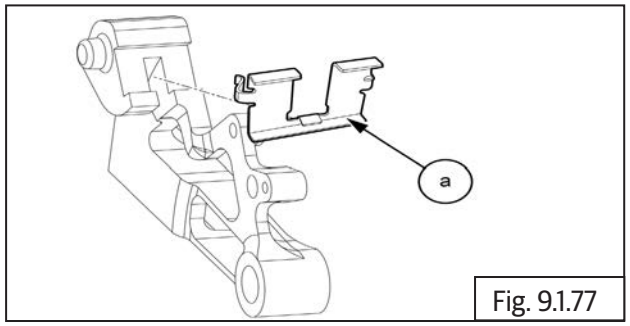

Fig. 9.1.77

- Locate and tighten the caliber slide pins **(a)** and **(c)**.
- Install the dust boots **(b)** and **(d)** on caliper assembly.

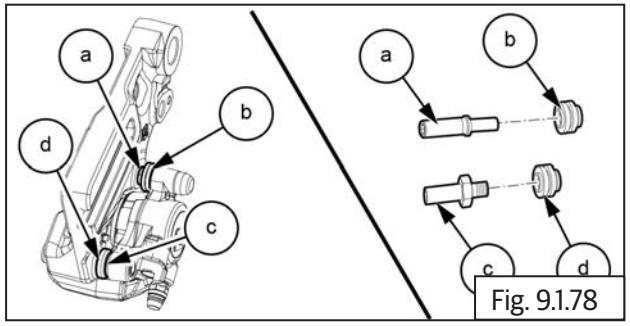

Fig. 9.1.78

	11mm Deep Socket 5mm Allen Socket
Torque	20-25 N-m / 2.0 - 2.5 kgf-m

- Locate bracket on the caliper and gently press caliper into bracket fully.

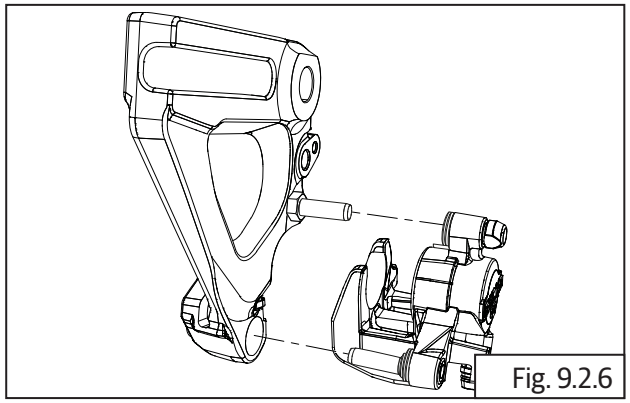
Fig. 9.2.6

- Install the pad tension spring plate **(a)** in the Caliper body.

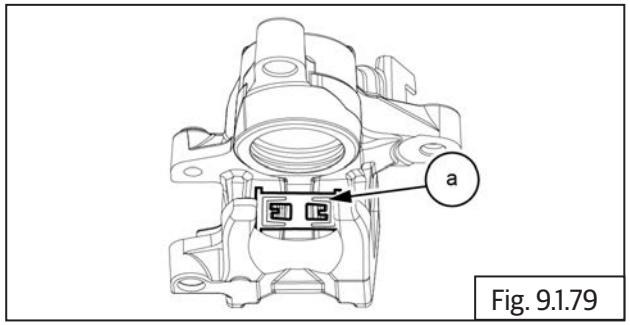

Fig. 9.1.79

- Assemble Bleeder screw **(a)** with the dust cap on the caliper body.

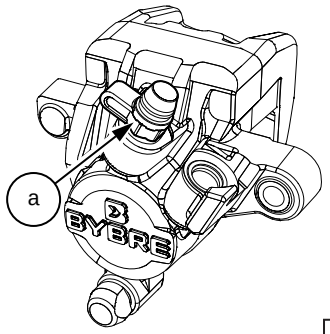

Fig. 9.2.7

	11mm Socket with Ratchet / Ring spanner
Torque	12-16 N-m / 1.2 - 1.6 kgf-m

Rear Brake Pads in Wheel Caliper

- Gently locate brake caliper **(a)** with holder onto brake disc.

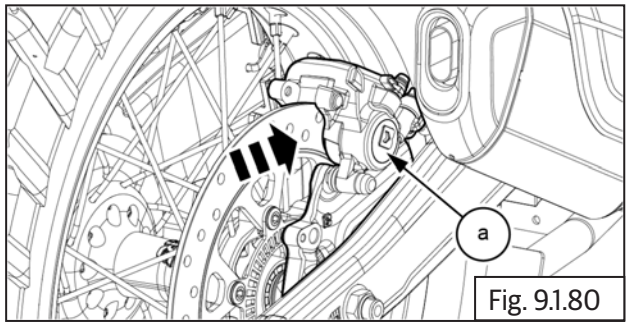

Fig. 9.1.80

- Gently locate brake pads **(a)** into brake caliper.

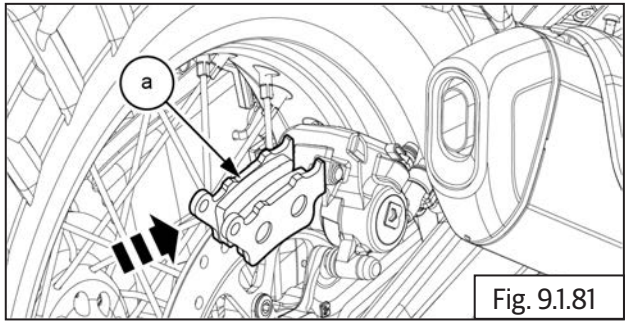

Fig. 9.1.81

- Locate brake pad lock pin **(a)** into brake caliper.

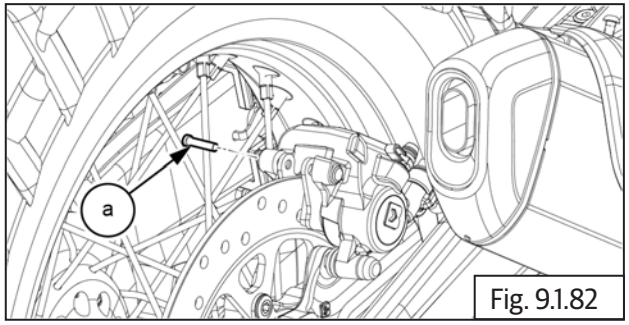

Fig. 9.1.82

	Nose plier

- Install clip **(a)** into brake pad lock pin.

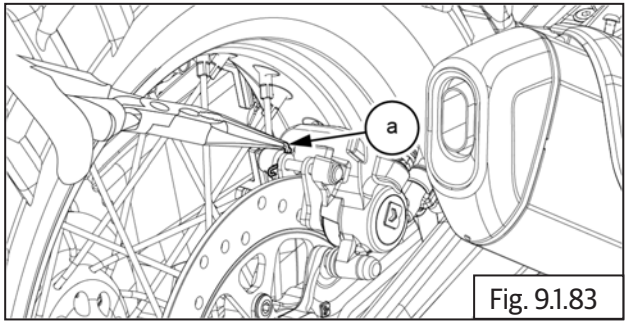

Fig. 9.1.83

	Nose plier

- Gently locate the rear wheel speed sensor ABS **(a)** onto caliper.

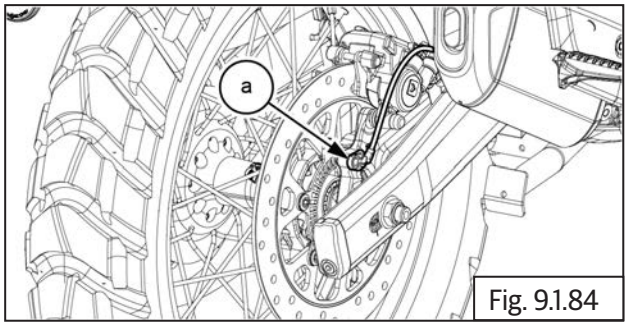

Fig. 9.1.84

- Tighten Hex socket head screw **(M6) (a)** on brake caliper RH rear wheel.

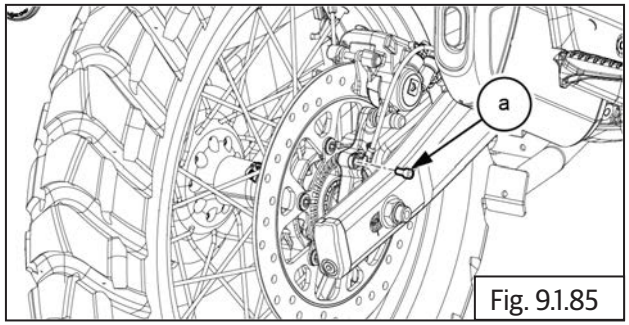

Fig. 9.1.85

	5 mm Allen socket with Ratchet
Torque	10 N-m/ 1.0 kgf-m

- Close the bleeder cap **(a)** on caliper **(b)**.

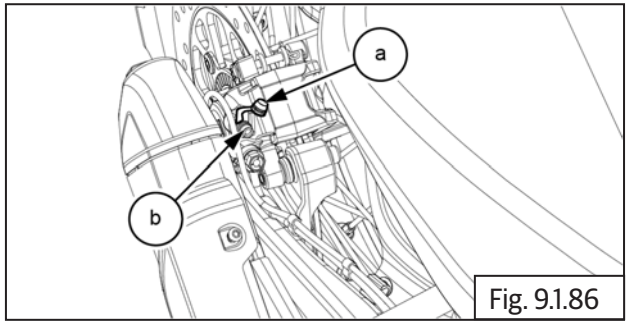

Fig. 9.1.86

- Tighten the banjo bolt **(a)** with new copper washer and ABS hose on rear brake caliper.

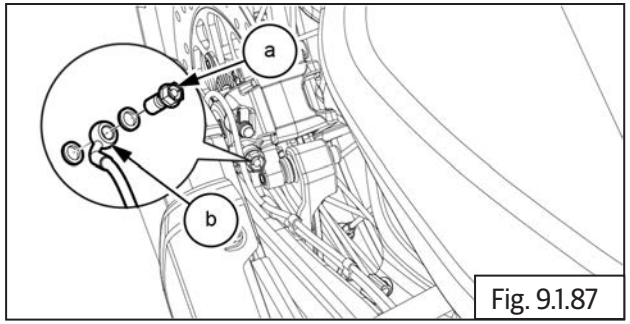

Fig. 9.1.87

	12 mm Socket with Ratchet
Torque	24 -28 N-m/ 2.4 - 2.8 kgf-m

- Assemble swing arm bolt, spindle and chain adjuster assembly into rear wheel.

9.2.8. Fluid reservoir

- Install the clip **(a)** and fix hose onto reservoir.

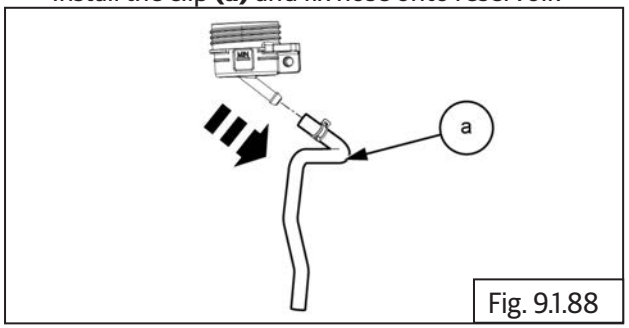

Fig. 9.1.88

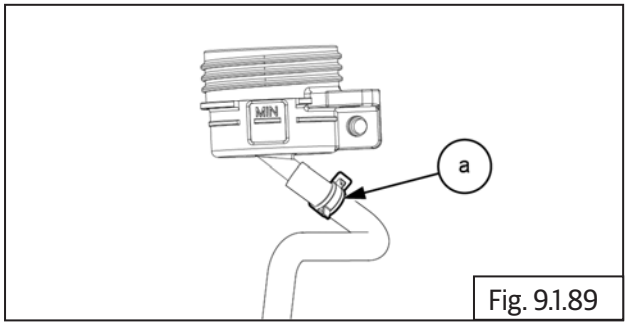

Fig. 9.1.89

- Install the plate diaphragm **(a)** and diaphragm **(b)** into reservoir.

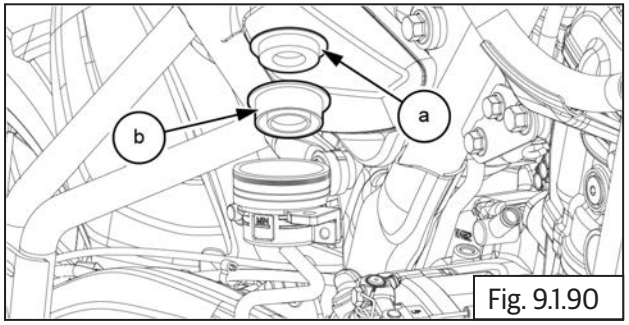

Fig. 9.1.90

- Locate and tighten Hex socket bolt **M6 (a)** on fluid

reservoir **(b)**.

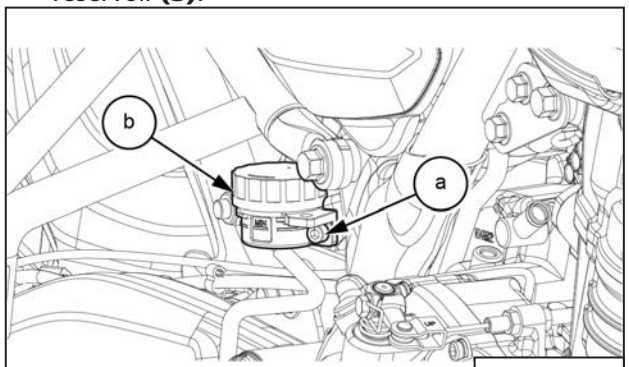

Fig. 9.2.8

	4 mm Allen socket with Ratchet
Torque	3 N-m/ 0.3 kgf-m

9.2.9. Rear Brake Pedal

- Install spring **(b)** and bush **(c)** into brake pedal.
- Install the pedal **(a)** on LHS control plate.

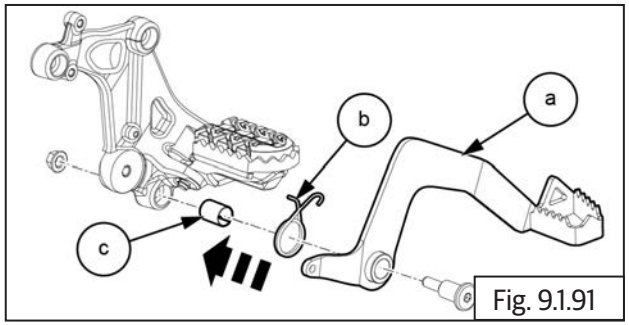

Fig. 9.1.91

- Locate and tighten Hex socket bolt with nut **(M8)** **(a)** to fix brake pedal **(b)**.

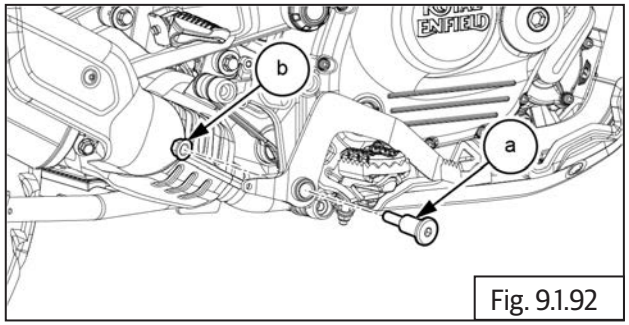

Fig. 9.1.92

	6 mm Allen socket and 12mm socket.
Torque	25 N-m / 2.5 kgf-m

Assemble Rear Brake Master Cylinder

- Install the spring **(a)** and spring retainer **(b)** into master cylinder bore**.**
- Install the primary washer **(d)** and primary seal **(c)** on piston**.**
- Install piston **(e)** with secondary seal **(f)** into master cylinder bore**.**

⚠ CAUTION

DO NOT use any sharp tool to assemble the O ring or piston in the master cylinder.

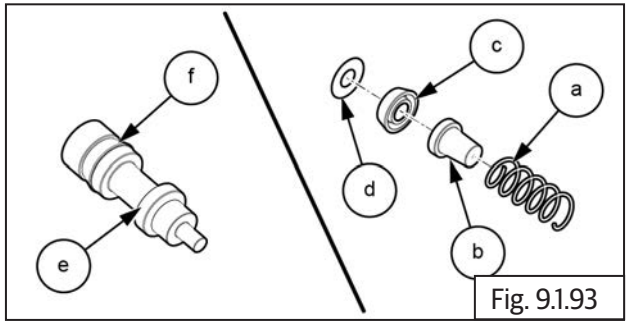

Fig. 9.1.93

⚠ CAUTION

Immediately wash away any brake fluid that spills.

- Locate push rod **(a)** into master cylinder.

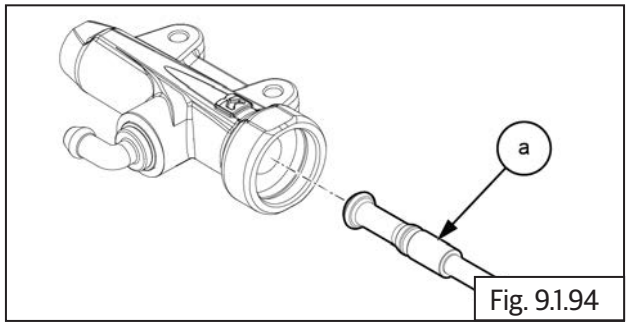

Fig. 9.1.94

- Locate stopper washer **(a)** into master cylinder **(b)**.

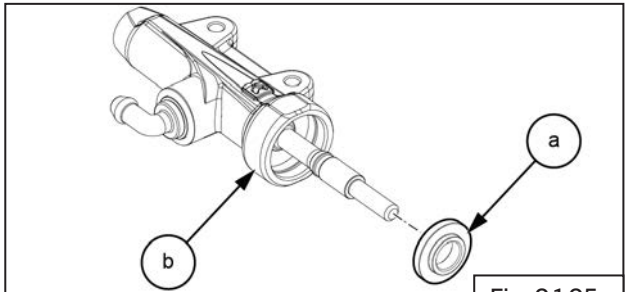

Fig. 9.1.95

- Assemble Circlip **(a)** in the master cylinder body **(b)** and ensure it is locked properly in the groove.

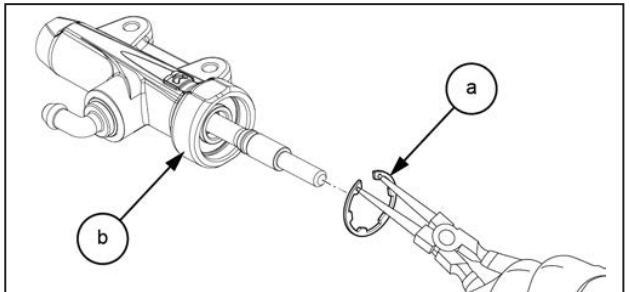

Fig. 9.2.9

	Circlip plier

- Install protective rubber boot **(a)** on master cylinder.

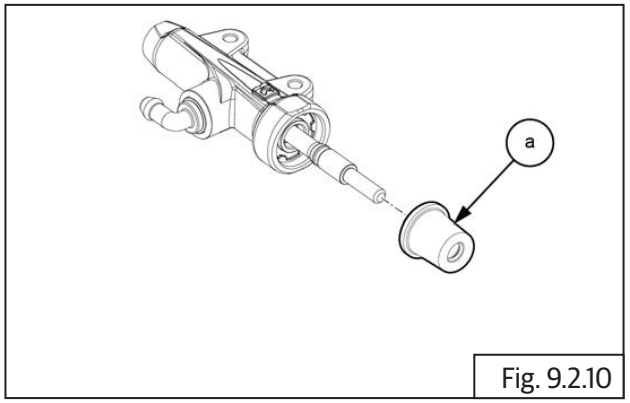

Fig. 9.2.10

	Screw driver

- Tighten the push rod nut.

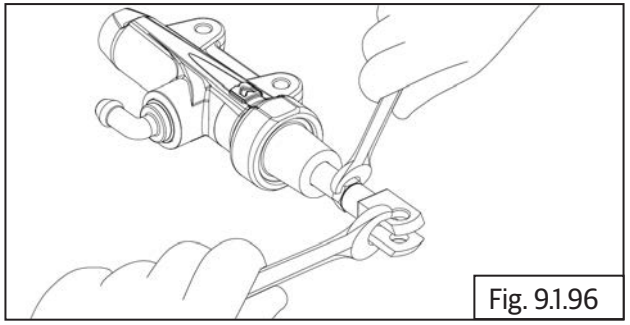
Fig. 9.1.96

	10mm and 12mm double end spanner
Torque	5.5 - 7.5 N-m/0.56 -0.76 kgf-m

9.2.10. Master Cylinder Assembly - Rear

- Locate master cylinder assembly **(a)** on RH control plate.

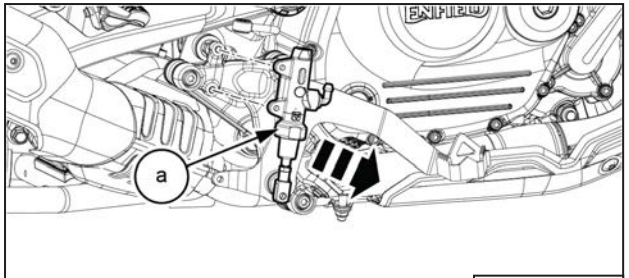

Fig. 9.1.97

- Install the clevis spring pin on master cylinder push rod.

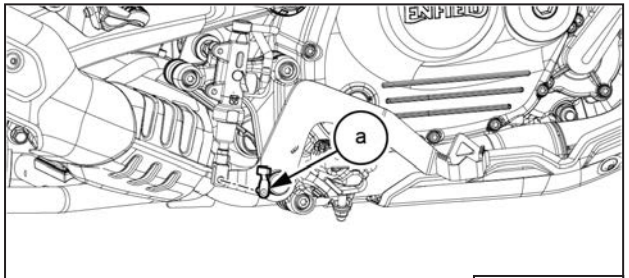

Fig. 9.1.98

	Nose plier

- Locate and tighten the rear brake pressure switch with new copper washers **(a)** and ABS hose **(b)**.

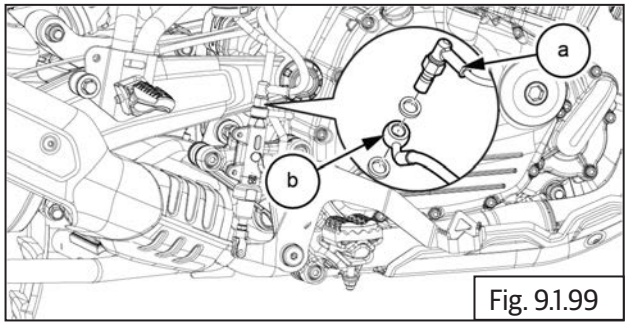

Fig. 9.1.99

	14mm Double End spanner
Torque	26 N-m/2.6 kgf-m

- Locate the heel guard **(a)**.

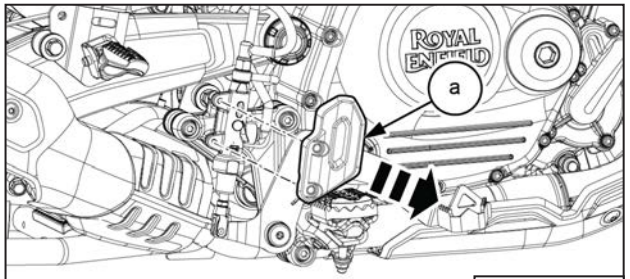

Fig. 9.1.100

- Locate and tighten the 2Nos cap bolts **(M6) (a)** on heel guard.

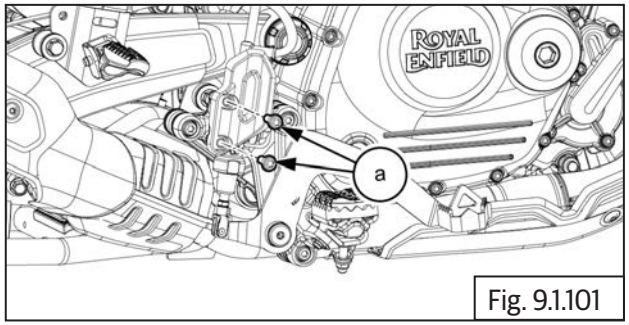

Fig. 9.1.101

	5mm Allen Socket
Torque	10N-m/1.0 kgf-m

- Fix the double cable clips 2 Nos **(a)** on pressure switch harness.

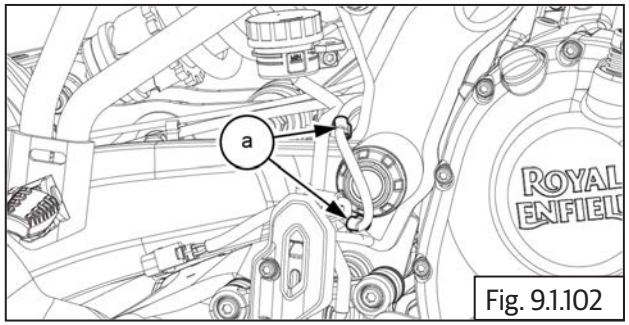

Fig. 9.1.102

- Connect rear brake pressure switch coupler **(a)**.

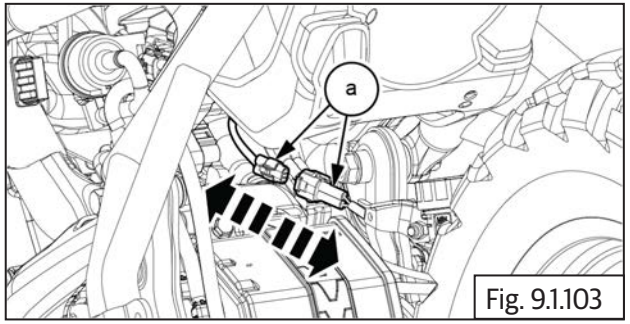

Fig. 9.1.103

- Fix the clamp **(a)** and hose on reservoir

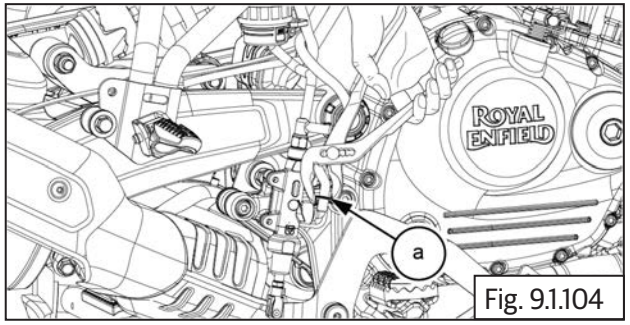

Fig. 9.1.104

	Plier

Brake - Front

9.2.11. Brake Disc - Front

- Locate front brake disc **(a)** on wheel hub with the disc facing up. Ensure mounting holes are correctly aligned.

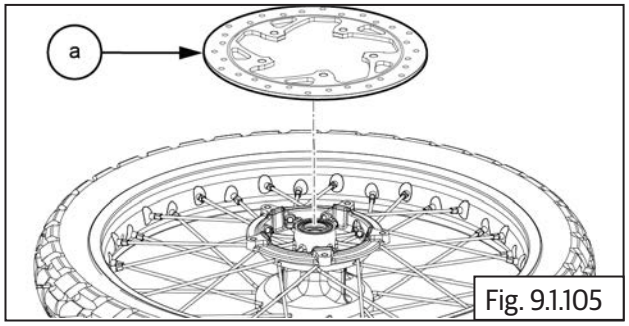

Fig. 9.1.105

- Position toner wheel **(a)** on front disc and ensure mounting holes are correctly aligned.

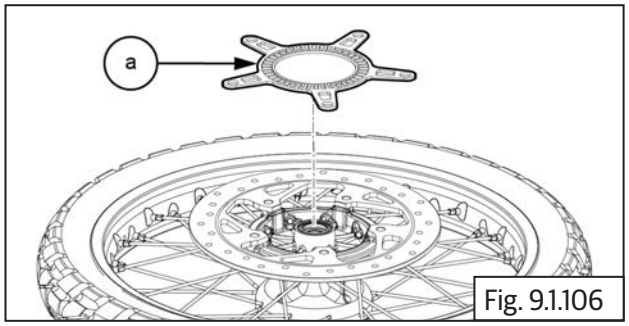

Fig. 9.1.106

- Locate the bolts **5 Nos (M8) (a)** on the mounting holes and tighten toner ring and brake disc to the wheel hub in crisscross patten to specified torque.

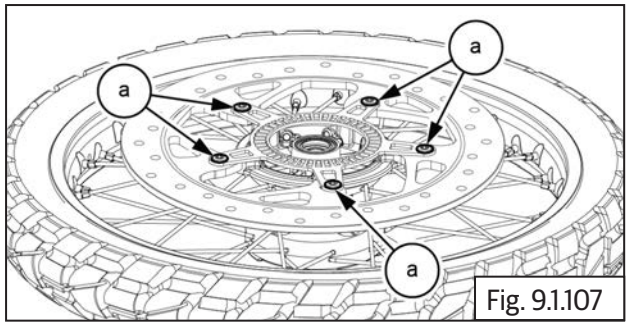

Fig. 9.1.107

NOTE
• *Disc bolts are should be used one time only. DO NOT reuse.*

	5 mm Allen socket with Ratchet
Torque	25 N-m/2.5 kgf-m

- Assemble front wheel into front fork assembly.

9.2.12. Brake Caliper - Front

- Coat fresh brake fluid on new dust seals and piston seals.
- Install piston seals in inner groove **(c)** and dust seals in outer groove **(b)** in the bore in caliper assembly.
- Coat the caliper cylinders and pistons **(a)** with fresh brake fluid.
- Insert closed end of the pistons into caliper bores and gently press it into caliper fully till open ends of the piston **(a)** are flush with caliper bore outer edge.

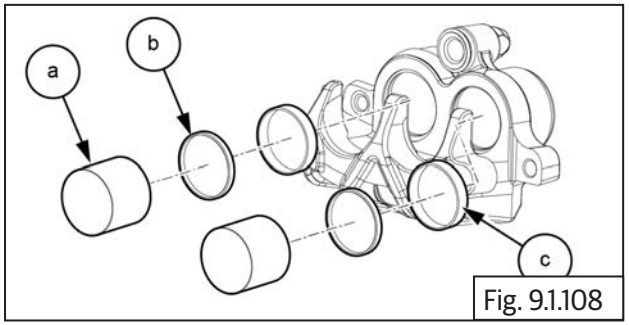

Fig. 9.1.108

NOTE
• *Do not apply force while assembling the pistons into the caliper. Press only with minimal hand pressure. Assemble pistons one at a time into the caliper.*

- Install the rattle clip **(a)** on caliber.

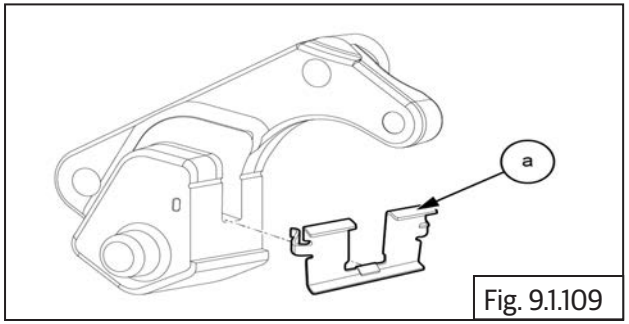

Fig. 9.1.109

- Locate and tighten the caliber slide pins **(a)** and **(c)**.

- Fix the dust boots **(b)** and **(d)** on caliper assembly.

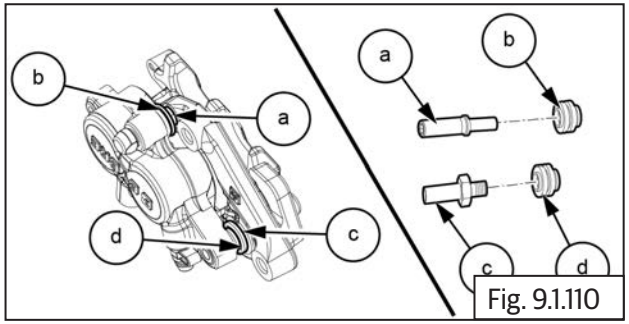

Fig. 9.1.110

	11mm Deep Socket and 5mm Allen socket
Torque	20 to 25 N-m/2.0 to 2.5 kgf-m

- Install the mounting bracket on caliper assembly.

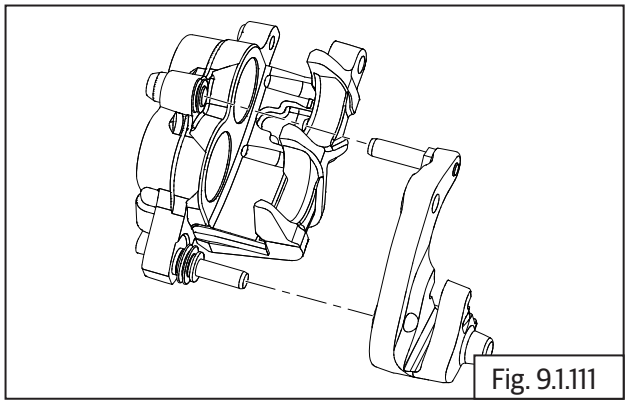
Fig. 9.1.111

- Install the pad tensioner spring plate **(a)**.

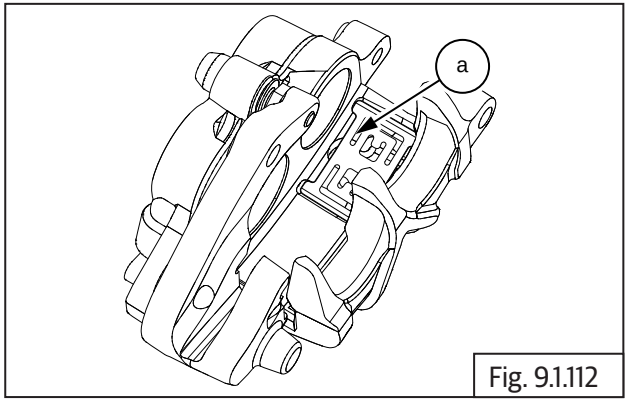

Fig. 9.1.112

Brake Caliper - Front

- Slide in and assemble brake pads **(a)** into brake caliper **(b)**.

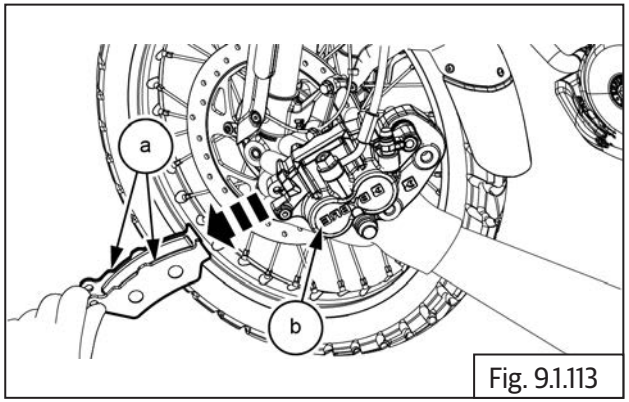

Fig. 9.1.113

- Lubricate and insert brake pad pin **(a)** into caliper.

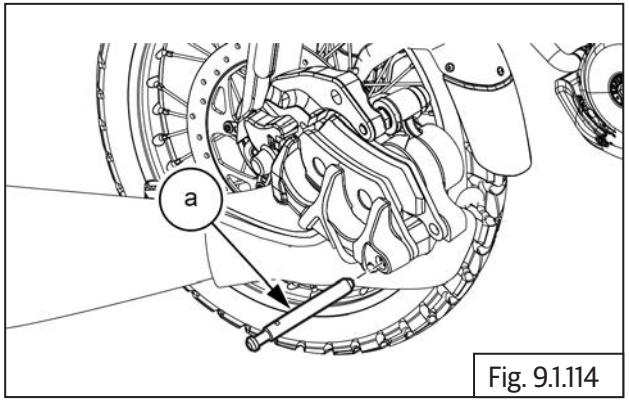

Fig. 9.1.114

- Suitably support caliper and correctly tap brake pad pin **(a)** from outside to inside.

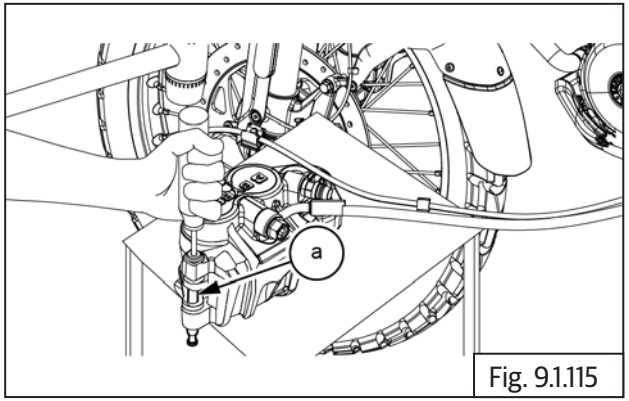

Fig. 9.1.115

	Pin punch and Mallet

- Assemble brake pad lock clip **(a)** into the brake pad pin **(b)**.

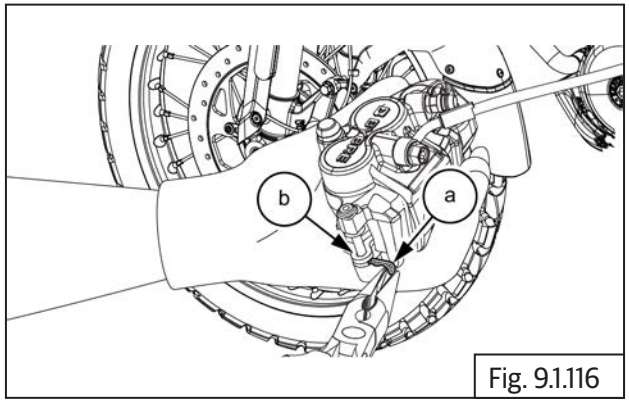

Fig. 9.1.116

	Nose plier

- Support and hold the front brake caliper assembly suitably onto the front LH fork.
- Locate and tighten upper and lower Hex flange head bolts **(M10) (a)** to fix front brake caliper assembly to LH fork.

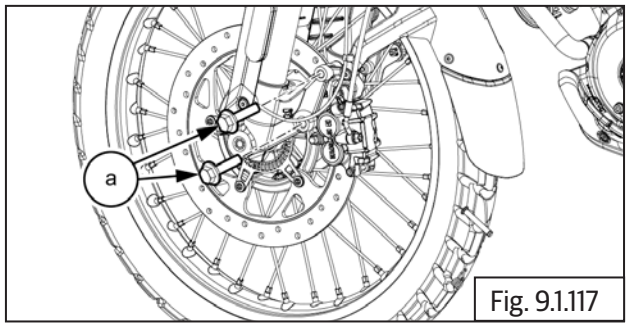

Fig. 9.1.117

	14 mm Socket with Ratchet
Torque	45N-m / 4.5 kgf-m

- Tighten the banjo bolt with new copper washer and ABS hose on front brake caliper.

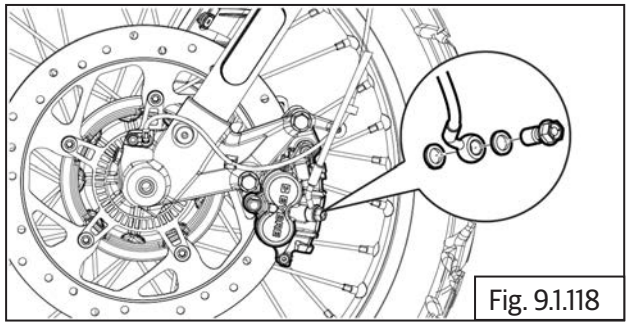
Fig. 9.1.118

	12 mm Socket with Ratchet
Torque	24-28N-m / 2.4 to 2.8 kgf-m

9.2.13 Master Cylinder Front

- Install the spring **(a)** and spring retainer **(b)** into master cylinder bore**.**
- Install the primary washer **(d)** and primary seal **(c)** on piston**.**
- Install piston **(e)** with secondary seal **(f)** into master cylinder bore**.**

⚠ CAUTION

DO NOT use any sharp tool to assemble the O ring or piston in the master cylinder.

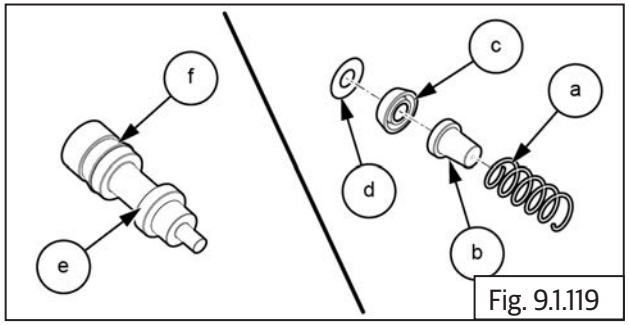

Fig. 9.1.119

⚠ CAUTION

Immediately wash away any brake fluid that spills.

- Compress and assemble circlip **(a)** into groove of master cylinder **(b)**.

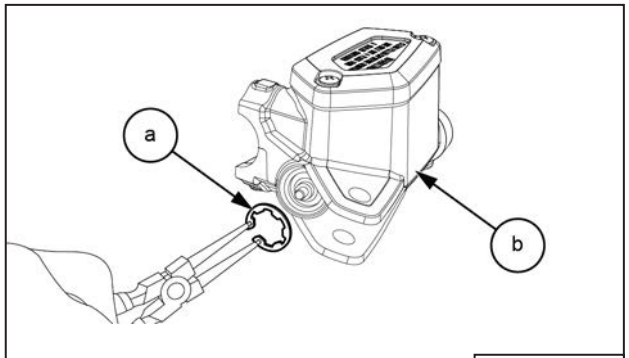

Fig. 9.1.120

⚠ CAUTION
DO NOT use tools with sharp ends. **Ensure circlip is locked properly after assemble.**

- Install the boot **(a)** on master cylinder assembly **(b)**.

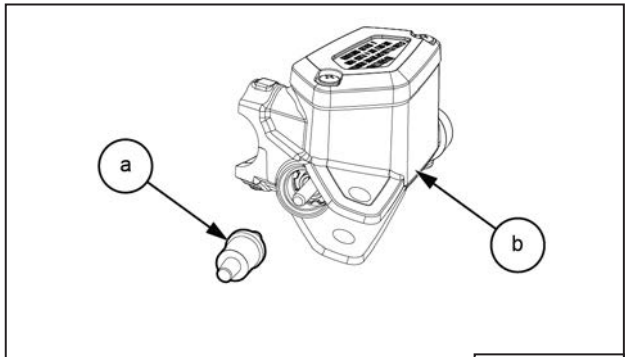

Fig. 9.1.121

	Screw driver

- Locate master cylinder assembly on handlebar RH and locate clamp over cylinder.
- Locate and tighten 2 Nos. Hex flange head bolt **(M5) (a)** into clamp and fix the master cylinder assembly.
- Tighten the top bolt first and then tighten the bottom bolt

NOTE
• *Tighten the top bolt first and then tighten the bottom bolt.*

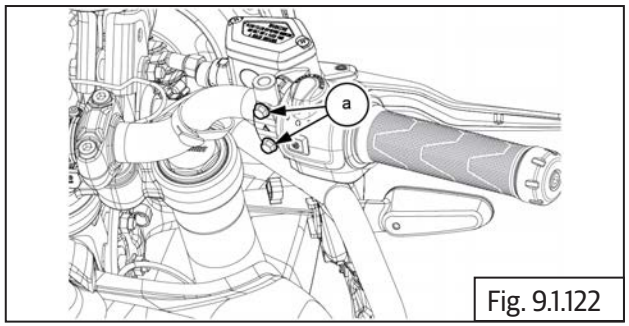

Fig. 9.1.122

	8 mm Socket with Ratchet
Torque	10 N-m / 1.0 kgf-m

- Install brake lever **(a)** with spring **(b)** on front master cylinder.

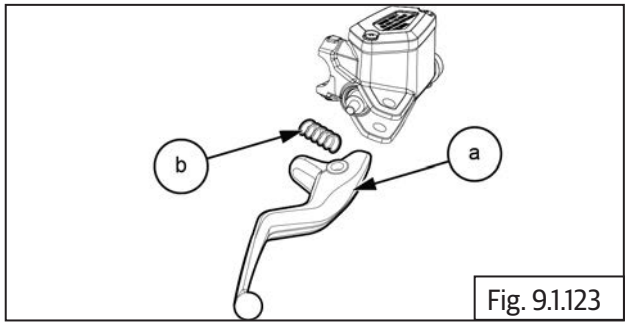

Fig. 9.1.123

- Hold screw **(M6) (a)** at the top of brake lever, and tighten hex nut at the bottom.

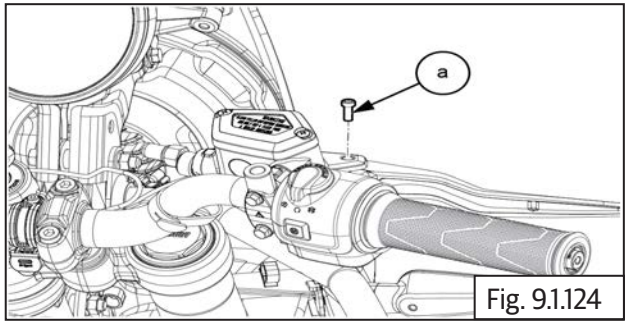

Fig. 9.1.124

	4 mm allen socket and 10 mm socket
Torque	3 - 5 N-m/0.3 to 0.5 kgf-m

- Tighten the brake switch **(a)** with new copper washer and ABS hose **(b)** on front master cylinder..

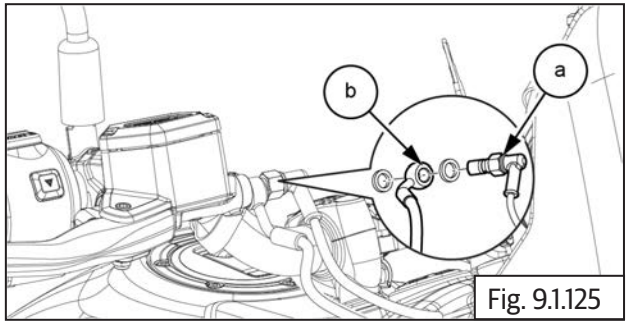

Fig. 9.1.125

	14 mm socket
Torque	24 - 28 N-m / 2.4 to 2.8 kgf-m

- Fix the double cable clips **(a)** on front brake pressure switch wiring harness.

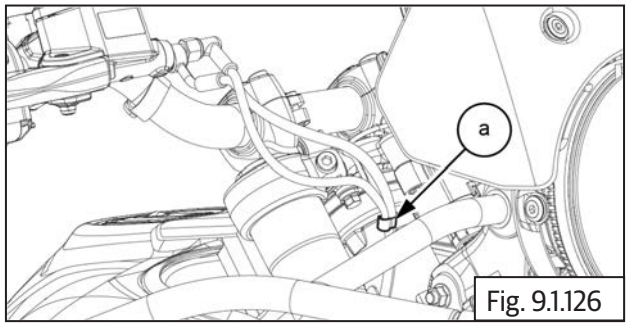

Fig. 9.1.126

- Locate harness clip **(a)** on RHS chassis frame.
- Tighten the hex head flange bolt **(M6)**.

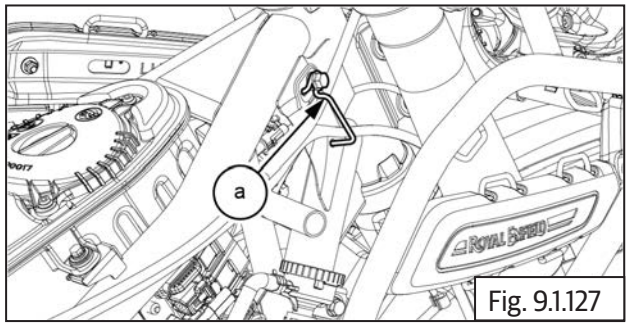

Fig. 9.1.127

	10 mm Socket with Ratchet
Torque	10 N-m / 1.0 kgf-m

- connect the front brake pressure switch connector **(a)**.

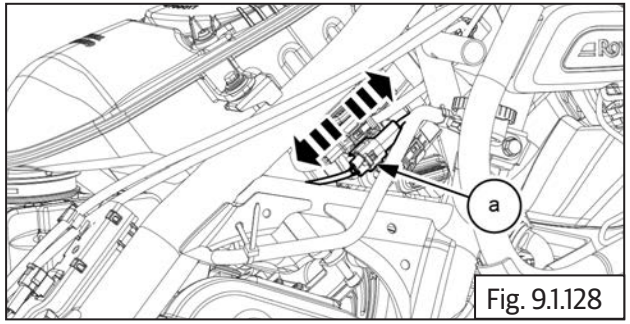

Fig. 9.1.128

After install refer brake oil bleeding procedure.

Install the following parts:

- Rear view mirror on handlebar RH.
- Install the fuel tank.
- Connect battery negative (-) terminal.
- Install the rider and pillion seats.

⚠ CAUTION
Immediately wash away any brake fluid that spills.

9.3 Anti-lock Braking System (ABS)

Working Principle

The Royal Enfield Himalayan motorcycles are equipped with the state of the art Anti-Lock Braking System (ABS).

The ABS is a safety system which constantly receives inputs about the speed of rotation of the front and rear wheels on a real time basis and modulates the braking force for each wheel when brakes are applied by the rider. This helps prevent the brakes from locking the wheels, especially when brakes are applied suddenly, the wheels have a better traction with the road surface.

The benefits of ABS:

- Increased braking efficiency and riding confidence when braking.
- Prevent wheel lock up when brakes are applied suddenly with great force thereby ensuring good traction of the front and rear wheels with the road surface.

The ABS consists of an Electronic Control Unit (ECU), modulator, toner rings and wheel speed sensors.

The ECU constantly receives inputs on the speed of rotation of the front and rear wheels through the wheel speed sensors. When the rider applies either the front or rear brakes or both brakes, the speed sensors provide data on the rate of deceleration of the wheels to the ECU which then commands the valves in the modulator to progressively regulate the hydraulic fluid pressure on a real time basis so that the brake pads do not "lock" on the brake disc which can potentially cause the wheels to lock.

Whenever front and/or rear brakes are applied with great force/suddenly, the braking management system gets input of the wheels speed through a wheel speed sensor and commands the modulator in the braking system to modulate the hydraulic fluid force such that the brake pads do not lock on the brake disc which effectively from locking and provide better traction to prevent the motor cycle from shifting and/or loss of control.

In the ABS, during application of brakes, a pulsating sensation will be felt on the brake lever/pedal indicating that the ABS is working correctly.

⚠ WARNING

The ABS will by no means prevent an accident and/or loss of control. It is the responsibility of the rider to anticipate and judge the braking distances required, depending on the speed at which the motorcycle is traveling and apply brakes sufficiently in advance to prevent an accident and/or loss of control.

While ABS assists in improved motorcycle control during braking, decreased stopping distances on dry and good road conditions, it cannot be assumed that it will be effective in wet, rainy, snow covered, off road conditions, loose gravel surfaces or hilly roads etc, as the traction of the wheel itself will be very minimal in these conditions.

As far as possible, whenever applying sudden brakes in emergency in wet conditions, please ensure the motorcycle is upright in steady riding position and the handlebars are straight. Avoid hard braking when banking heavily at great speeds.

Whenever brakes are applied, a pulsating sensation will be felt on the brake lever/pedal. This is characteristic to the ABS and quite normal, as the modulator in the ABS constantly modulates the hydraulic pressure in the braking system in relation to the force applied on the brake lever/pedal and the speed of the motorcycle.

Whenever bleeding the hydraulic system, it is highly recommended to bleed both the front and rear brakes for proper functioning of the ABS. Do not restrict to bleeding any one brake system as it may render the ABS non-functional, in case the other brake has air bubbles in its system.

Functions and Specifications of the ABS Aggregates

As soon as the ignition and engine stop switch are switched ON, the ABS sign will light up. The lamp will remain ON till the motorcycle attains a speed of Kmph (MPH) and then switches OFF. This indicates that the ABS is working properly.

In the event the lamp does not switch OFF and remains continuously ON at higher speeds, it is recommended not to drive the motorcycle and get the brake system inspected and corrected through a nearest authorized Royal Enfield Dealer / Distributor.

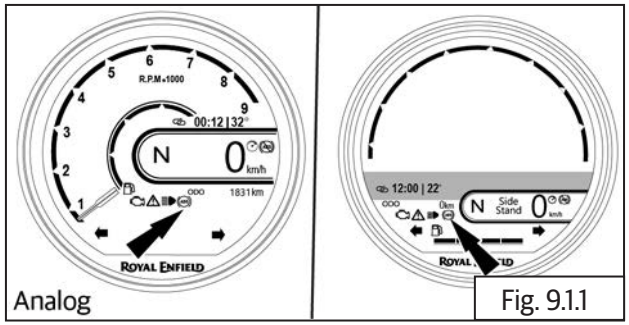

Fig. 9.1.1

The ride mode can be viewed and changed by pressing the mode button on the RH switch cube.

The ride mode appears on the home screen and following modes are available.

- Performance + ABS ON
- Performance + Rear ABS OFF
- ECO + ABS ON
- ECO + Rear ABS OFF

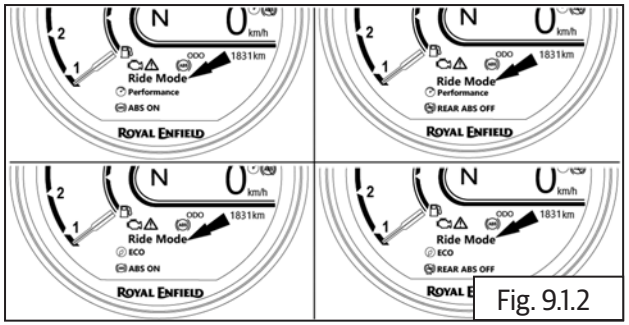

Fig. 9.1.2

1. Electronic Control Unit (ECU) with Modulator

The ECU is located in the bracket alongside of the modulator, on the frame, behind the battery. It consists of a microprocessor, which receives inputs from the wheel speed sensors, interprets the data, determines the safe hydraulic pressure in relation to the speed of the wheels and commands the valves in the modulator to progressively regulate the hydraulic fluid pressure on a real time basis for efficient and safe braking.

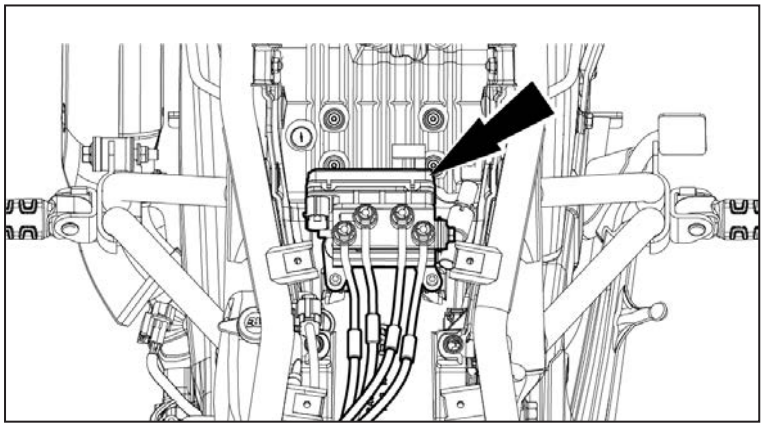

The ECU also records and stores data on the performance of the ABS on a real-time basis. This will help in diagnosing any braking related disorders, whenever the Royal Enfield NACS II diagnostic tool is connected to the socket in the wiring harness of the motorcycle. The history stored in the ECU can also be saved to an external computer for future reference and also erased from the ECU, using the Royal Enfield NACS II diagnostic tool.

The modulator is located on the frame below the fuel tank. The brake hoses from the master cylinders and brake calipers are connected to the modulator. Whenever brakes are applied, the valves inside the modulator are progressively activated by the ECU to regulate the hydraulic fluid pressure in the brake system. This in turn will modulate the movement of the pistons inside the brake calipers to prevent the brake pads from locking on the brake discs.

3. Wheel Speed Sensors, Front and Rear

There are 2 wheel speed sensors provided in the motorcycle. The front speed sensor is assembled on the fork end LH and the rear speed sensor is assembled on the rear wheel caliper bracket.

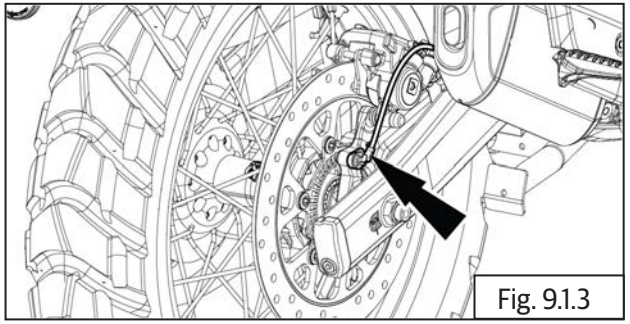
Fig. 9.1.3

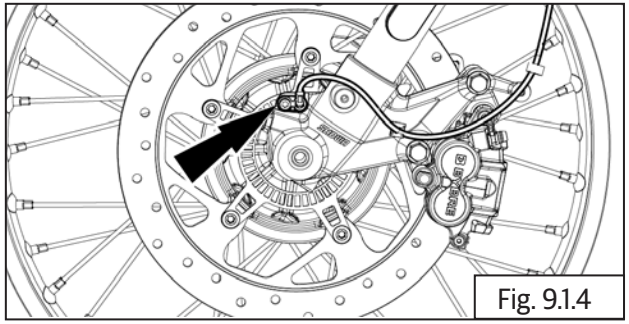
Fig. 9.1.4

These sensors provide the inputs to the ECU about the speed of rotation of the wheels.

4. Toner Rings, Front and Rear

The toner rings are assembled on the front and rear brake hubs inside the brake discs.

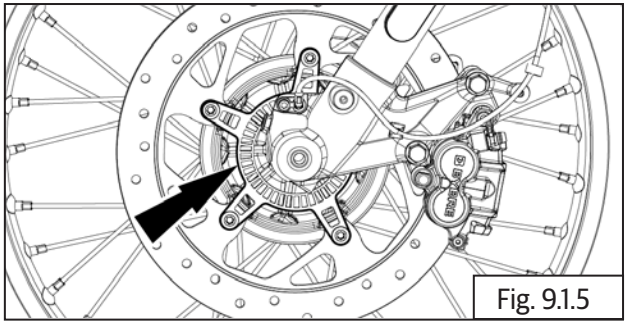

Fig. 9.1.5

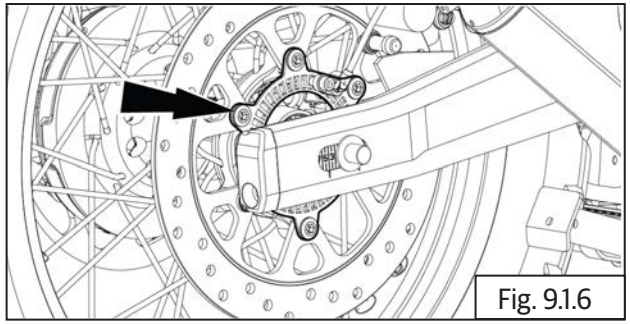

Fig. 9.1.6

The toner rings assists the wheel speed sensors to assess the speed of rotation of the wheels.

5. Master Cylinders, Front and Rear

The front brake master cylinder is assembled on the handlebar RH and activated by the front brake lever.

The rear brake master cylinder is assembled on the frame RH side and activated by the brake pedal .

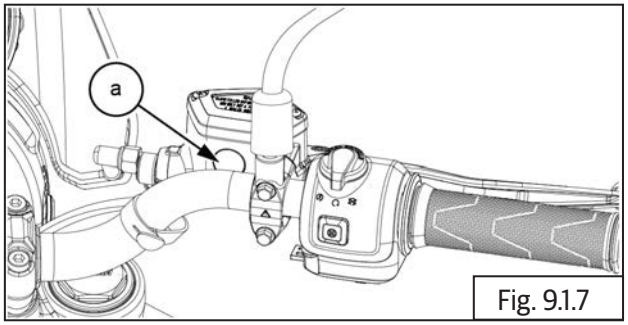

Fig. 9.1.7

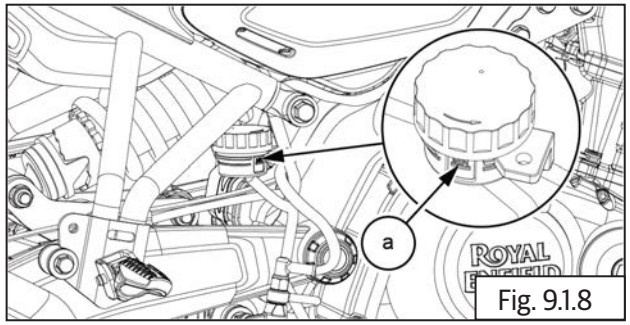

Fig. 9.1.8

Whenever the front brake lever/rear brake pedal are activated, the piston inside the master cylinder applies force on the brake fluid to activate the brakes.

The master cylinders are connected to the modulator through brake hoses to transmit the applied hydraulic fluid pressure from the master cylinders.

6. Wheel Calipers - Front and Rear

The front wheel caliper is assembled on the fork end LH and the rear wheel caliper is located on the rear swing arm RH. The wheel calipers consist of pistons and brake pads.

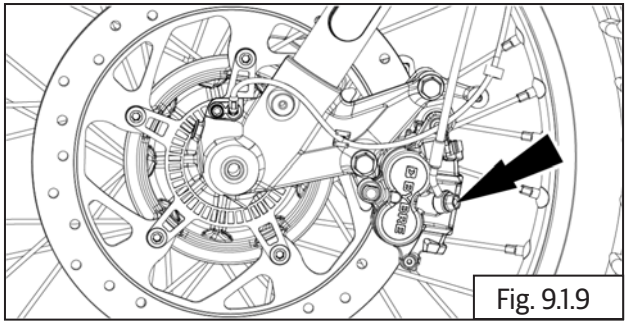

Fig. 9.1.9

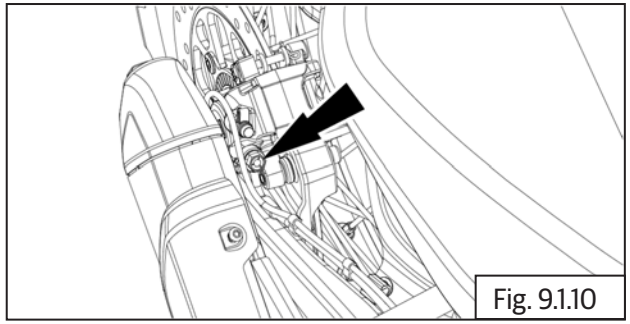

Fig. 9.1.10

When brakes are applied, the hydraulic fluid force in the braking system causes the pistons to move, and pushes the brake pads against the brake discs on the wheels for braking. The wheel calipers are connected to the modulator which modulate the hydraulic fluid force to be applied against the pistons.

Do's and Don'ts for ABS

- **Use only approved Brake fluid recommended by Royal Enfield. (DOT4)**
- **Whenever the modulator is removed from the motorcycle, please ensure it is stored upright with the ports facing upwards.**
- **Whenever the modulator is removed from the motorcycle for any reason, please ensure the front and rear brake system bleeding is carefully done and no air is trapped in the brake system.**
- **DO NOT interchange ABS unit/ECU from one motorcycle to another.**
- **DO NOT interchange the brake hose connections between master cylinders and wheel cylinders and also front and rear circuit, at the modulator end.**
- **The shelf life of a wet modulator unit is 5 years from the date of manufacture.**

Dismantling

9.3.1.Modulator

⚠ CAUTION

Before dismantling the modulator, ensure ignition switch and engine stop switch are in OFF position.

Ensure the hydraulic brake fluid from the front and rear brakes is drained completely.

- Ensure ignition key and engine stop switch are in OFF position.
- Remove the rider and pillion seats.
- Disconnect battery negative (-) terminal.
- Remove the fuel tank.
- Remove RHS side panel.

⚠ CAUTION

Ensure the following:

Fuel is drained completely from fuel tank.

Fuel feed and return hoses are disconnected from the fuel rail.

Wiring couplers to fuel pump and low fuel sensors are disconnected.

EVAP hose pipes are disconnected.

- Bleed out the brake fluid from the front and rear brake system.

⚠ WARNING

Ensure brake fluid does not get in contact with eyes and skin. In-case of exposure wash affected area thoroughly with water. Seek medical attention immediately if any irritation persists.

Keep out of reach of children.

Dispose drained brake fluid carefully and responsibly.

- Front RHS connector holder.
- Disconnect the front brake pressure switch connector **(a)**.

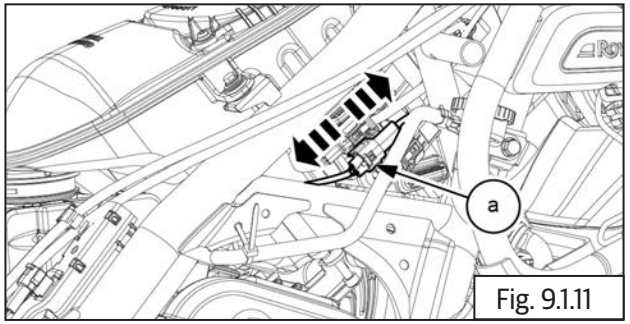

Fig. 9.1.11

- Loosen and remove the top seat mounting bracket bolts 4 Nos **(M6) (a)** .

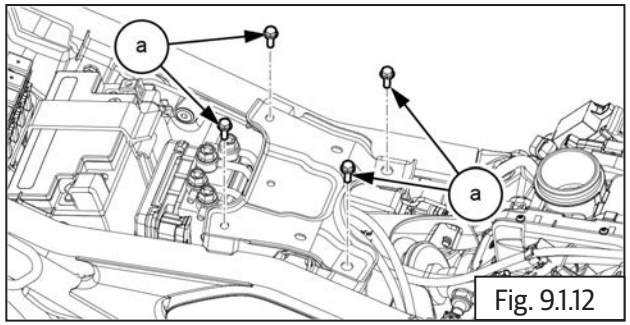

Fig. 9.1.12

	10 mm Socket and ratchet

- Remove the top seat mounting bracket **(a)** from chassis frame.

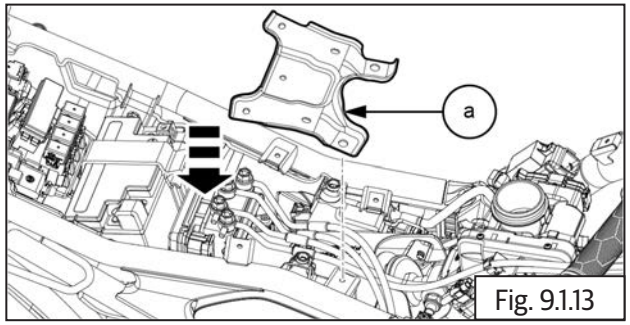

Fig. 9.1.13

- Loosen and remove hex head flange bolt **(M6)**.
- Remove harness clip **(a)** from RHS chassis frame.

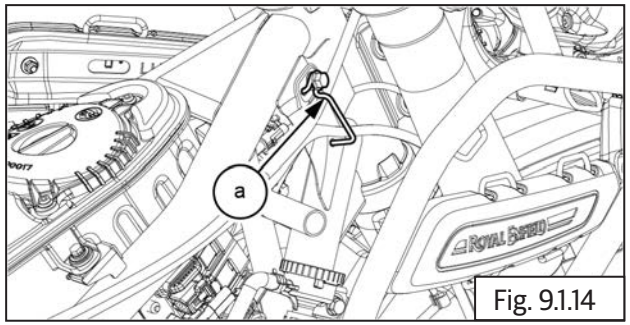

Fig. 9.1.14

	10 mm Socket with Ratchet

- Detach the double cable clips **(a)** on front brake pressure switch wiring harness.

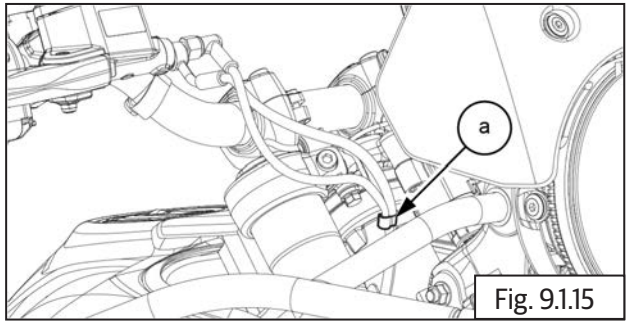

Fig. 9.1.15

- Loosen and remove the brake switch with harness **(a)**.
- Remove copper washers from front brake hose **(b)**.
- Remove the brake hose **(b)** from front master cylinder.

NOTE
• When removing the brake hose, take care not to spill the brake fluid on the painted or plastic parts. • When removing the brake hoses, temporarily secure the end of the brake hose to some high place to keep fluid loss to a minimum.

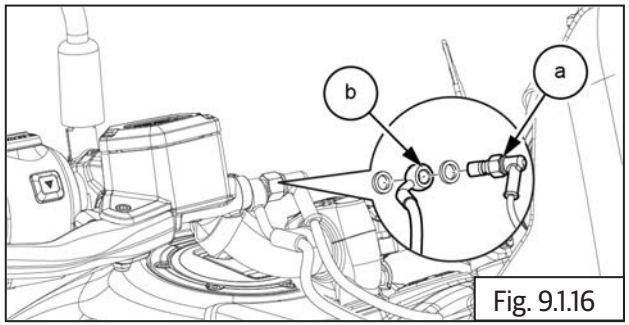

Fig. 9.1.16

	14 mm Spanner

- Loosen and remove the banjo bolts with copper washers from front brake caliper.

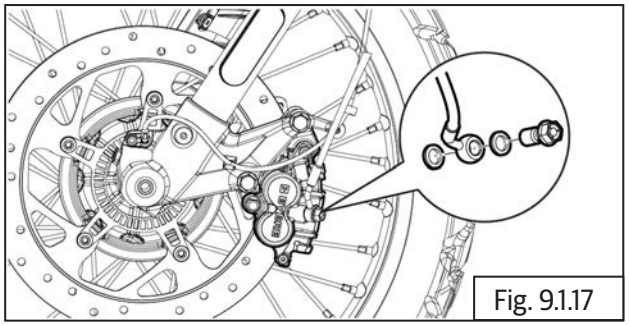
Fig. 9.1.17

	12 mm Socket with Ratchet

NOTE
• When removing the brake hose, take care not to spill the brake fluid on the painted or plastic parts. • When removing the brake hoses, temporarily secure the end of the brake hose to some high place to keep fluid loss to a minimum.

- Remove the 2Nos cap bolts **(M6) (a)** from heel guard.

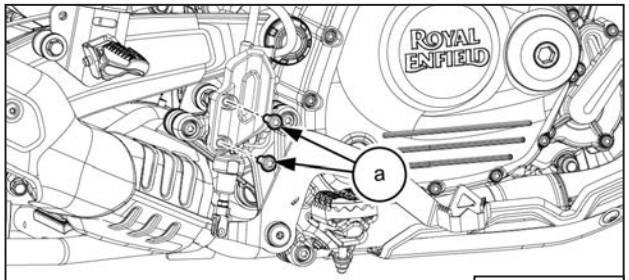

Fig. 9.1.18

	5mm Allen key

- Remove the heel guard **(a)**.

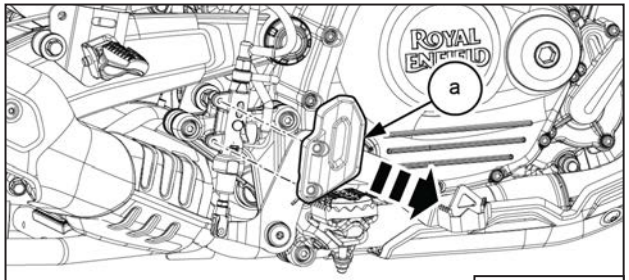

Fig. 9.1.19

- Disconnect rear brake pressure switch coupler **(a)**.

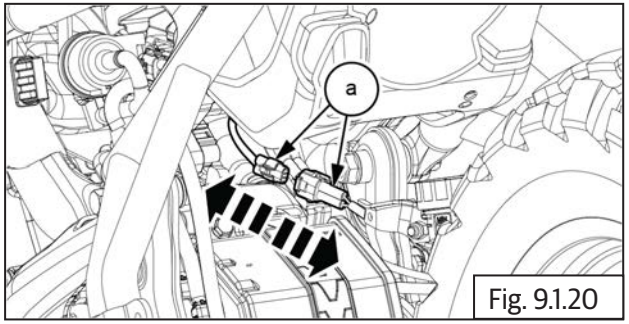

Fig. 9.1.20

- Just remount the head screw on master cylinder.
- Loosen and remove the rear brake pressure switch **(a)** and ABS hose.

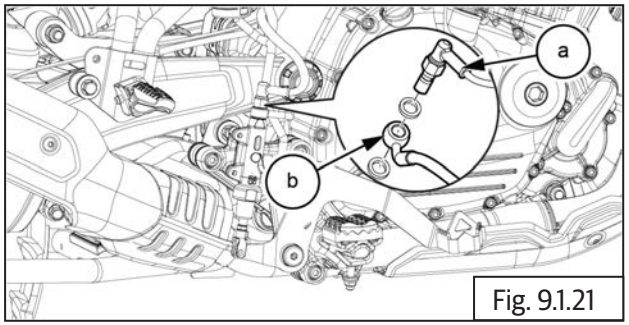

Fig. 9.1.21

	14mm Double End spanner

- Loosen and remove the banjo bolt **(a)** with copper and ABS hose from rear brake caliper.

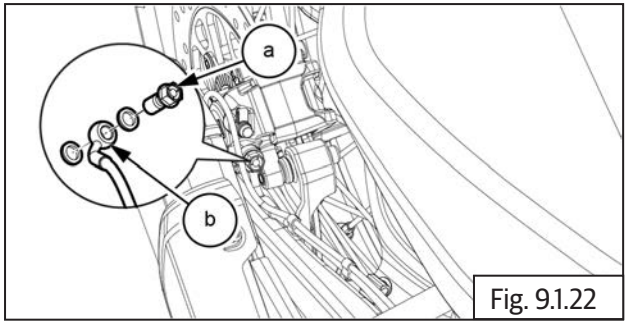

Fig. 9.1.22

	12 mm Socket with Ratchet

NOTE
• When removing the brake hose, take care not to spill the brake fluid on the painted or plastic parts. • When removing the brake hoses, temporarily secure the end of the brake hose to some high place to keep fluid loss to a minimum.

- Loosen and remove the cap bolt **(M6) (a)** from ABS hose line.

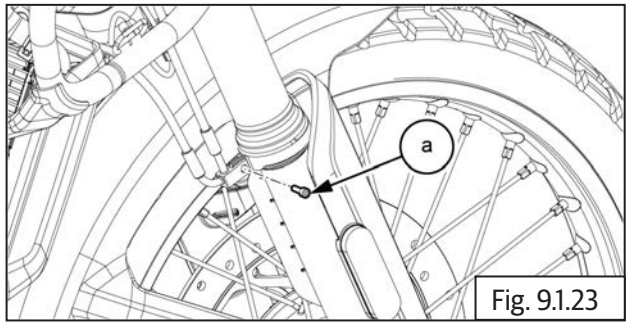

Fig. 9.1.23

	5mm Allen Socket

- Loosen and remove the cap bolt **(M6) (a)** from brake line clip **(b)**.

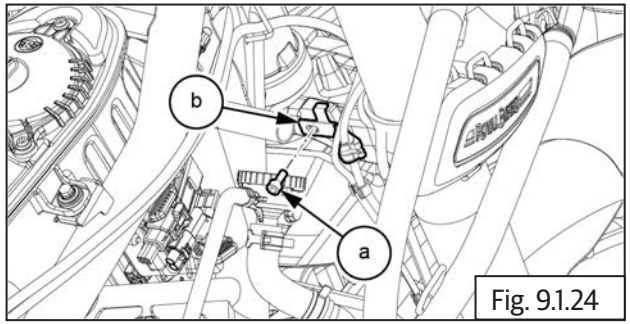

Fig. 9.1.24

	5mm Allen Socket

- Remove the cable strap **(a)** from ABS hose.
- Detach the hose from double cable clip **(a)**.

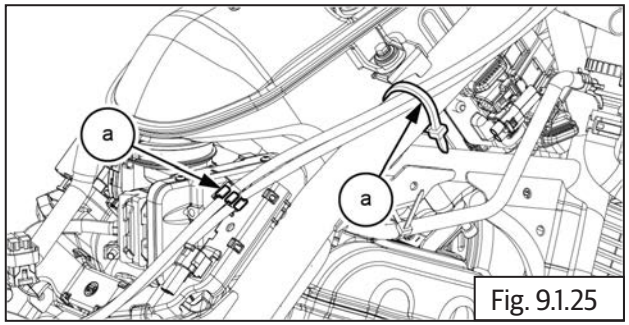

Fig. 9.1.25

- Detach the rear ABS hose from double cable clip **(a).**

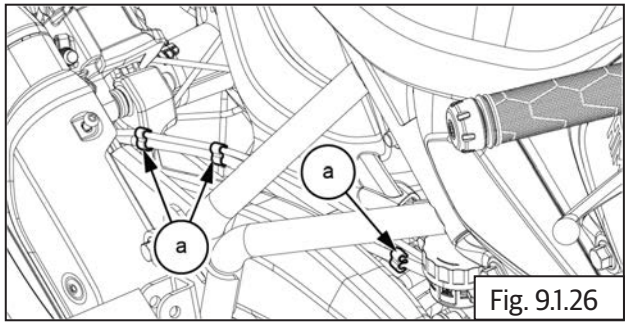

Fig. 9.1.26

- Loosen and remove 2Nos screw **(a)** from expansion tank.

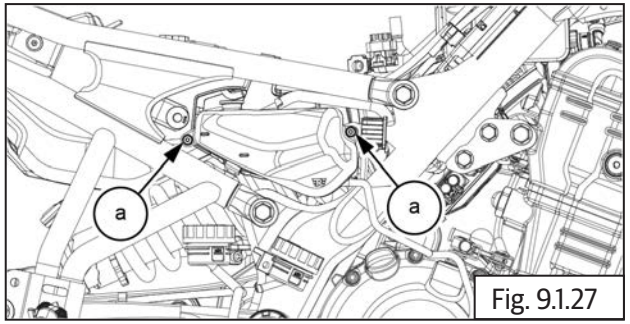

Fig. 9.1.27

	T20 Torx socket

- Loosen and remove screw **(a)** from retainer braket.
- Remove retainer bracket **(b)** from chassis frame.

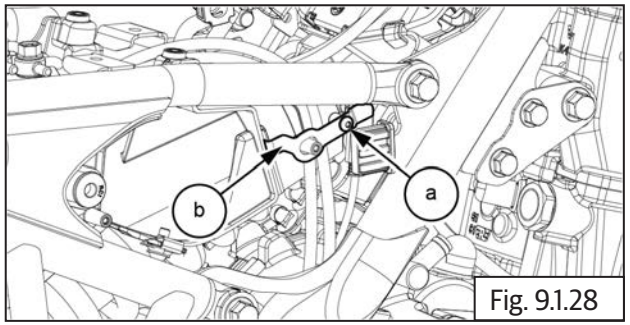

Fig. 9.1.28

	3 mm Allen Socket with Ratchet

- Disconnect the ABS modulator coupler.

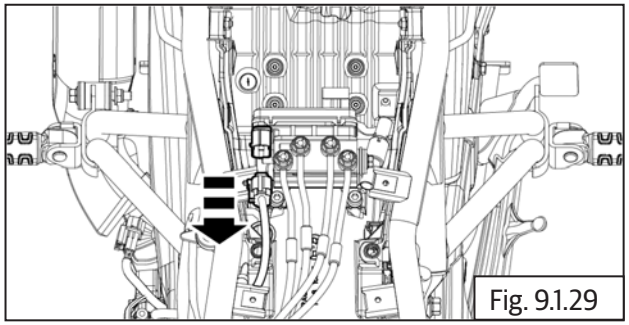

Fig. 9.1.29

- Loosen and remove 2Nos cap bolts **(a)** from modulator bracket.

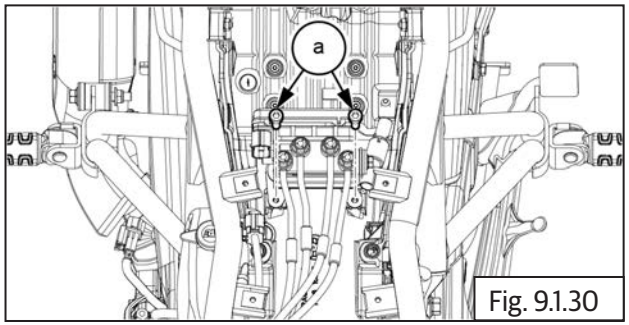

Fig. 9.1.30

	5 mm Allen Socket with Ratchet

- Gently pull out modulator **(a)** along with bracket and 4 Nos. hoses from frame to remove.

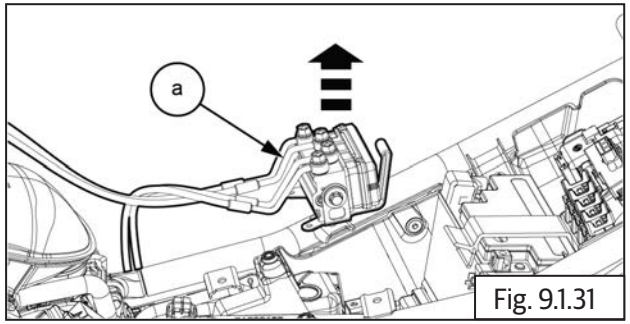

Fig. 9.1.31

- Loosen and remove hex bolt 2Nos **(M6) (a)** from modulator bracket .

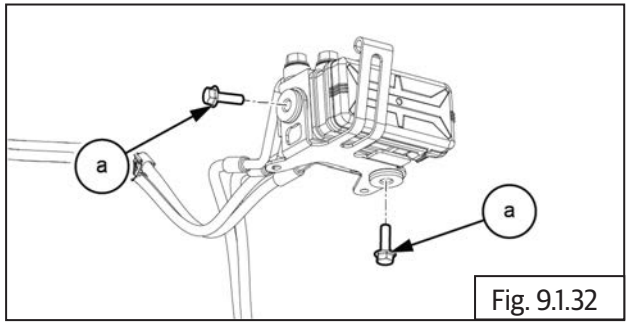

Fig. 9.1.32

	10 mm Socket with Ratchet

- Remove the bracket **(a)** from modulator.

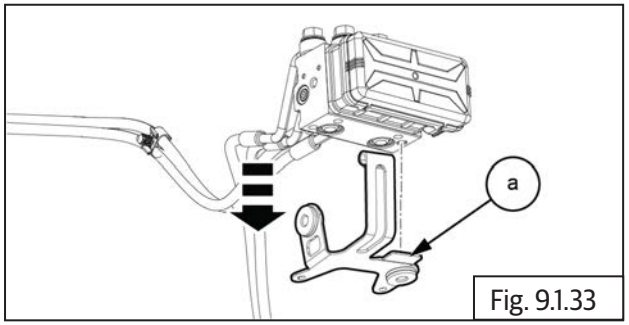

Fig. 9.1.33

- Remove the 2Nos spacer top hats **(a)** and grommets **(b)** from bracket.

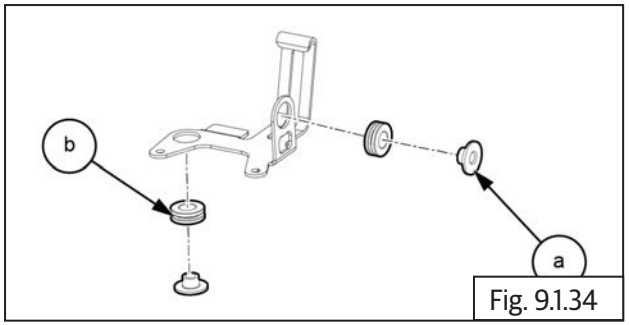

Fig. 9.1.34

- Brake hose color tags:
  - a) BLUE - Front Master Cylinder Assembly
  - b) GREEN - Front Brake Caliper
  - c) RED - Rear Brake Caliper
  - d) YELLOW - Rear Master Cylinder Assembly

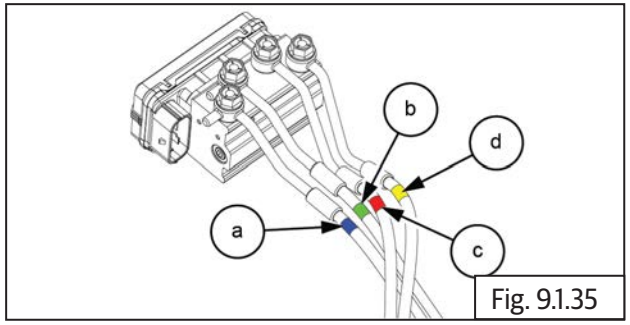

Fig. 9.1.35

- Reference mark to be created during dismantling for ease of assembly.

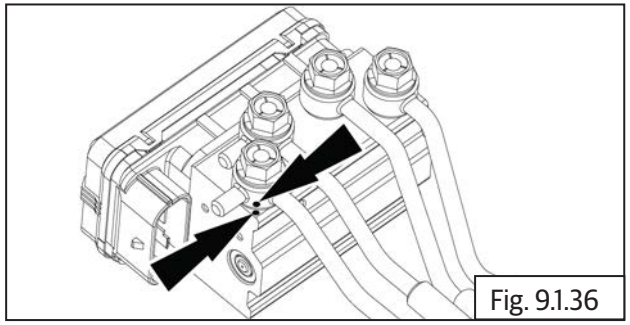
Fig. 9.1.36

- Repeat the above process to other brake hoses.
- Support modulator suitably on a work table, loosen and remove 4 Nos. banjo bolts **(a)** along with washers from modulator to remove brake hoses **(b)**.
- Remove 4 Nos. brake hoses from modulator.

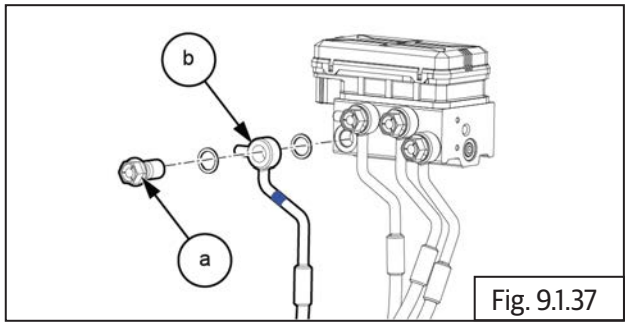

Fig. 9.1.37

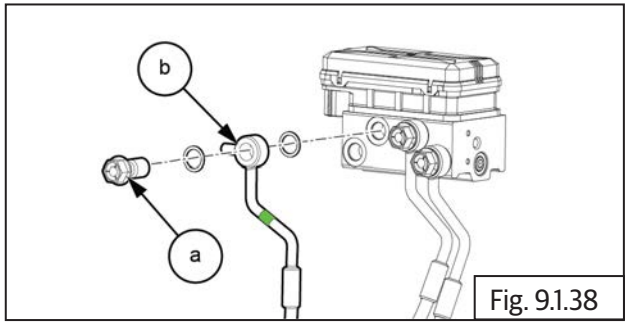

Fig. 9.1.38

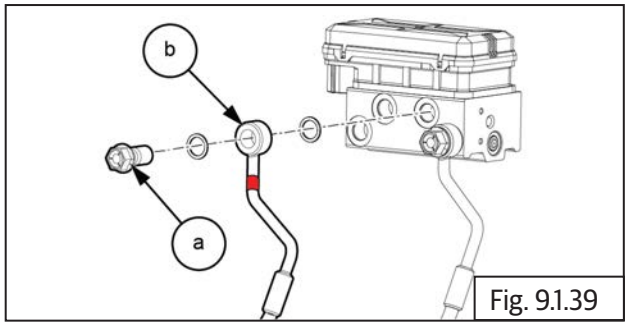

Fig. 9.1.39

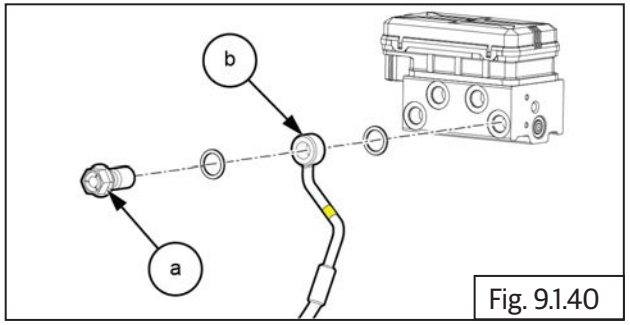

Fig. 9.1.40

Do's & Don'ts

- **DO NOT interchange ABS Modulator/ECU from one motorcycle to another.**
- **Whenever the modulator is removed from the motorcycle, please ensure it is stored upright with the ports facing upwards.**

9.3.2. Wheel Speed Sensor - Front

- Remove the 2 Nos bolts from LHS front murguard.
- Slighty lift to acces the ABS sensor mounting screw.
- Loosen and remove hex socket head bolt **(M6) (a)** holding sensor **(b)** to fork end LH.
- Gently pull out sensor from fork end LH.

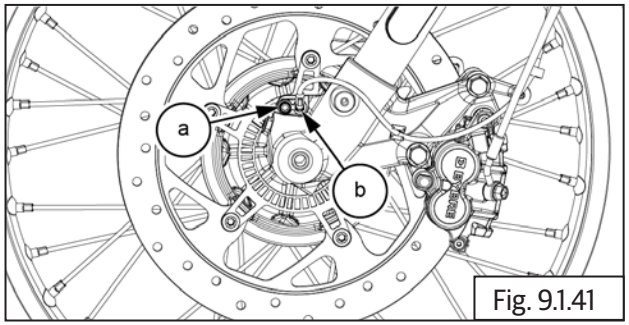

Fig. 9.1.41

	5 mm Allen socket with Ratchet

- Detach the double cable from ABS sensor harness.

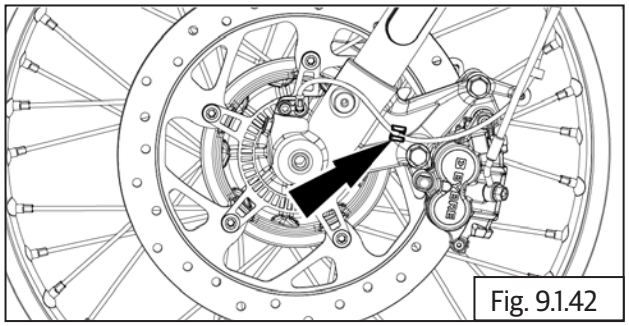
Fig. 9.1.42

- Disconnect the Front ABS sensor coupler **(a)** from near RHS air filter.
- Remove the sensor from the vehicle.

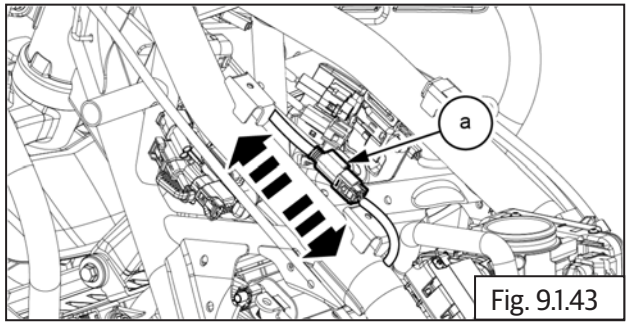

Fig. 9.1.43

9.3.3. Wheel Speed Sensor - Rear

- Remove ABS sensor coupler from rear RHS frame.

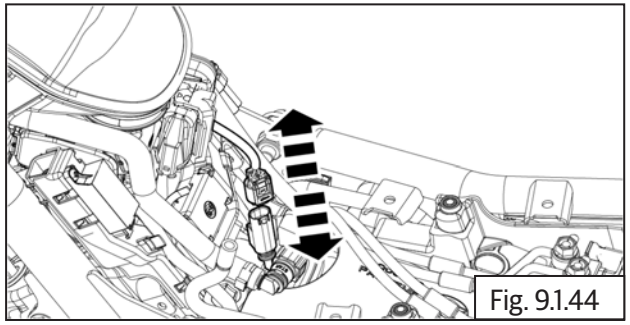
Fig. 9.1.44

- Detach the rear rear ABS sensor harness from double cable clips **(a).**

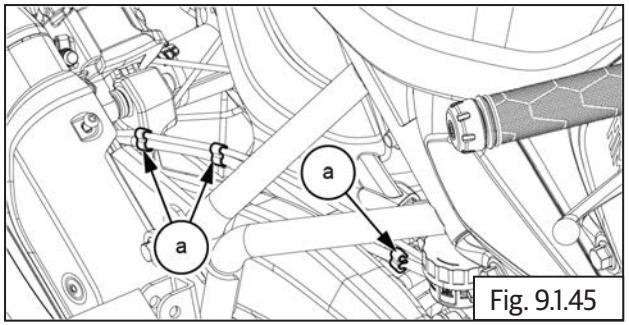

Fig. 9.1.45

- Loosen and remove hex flange head bolt **(M6) (a)** holding sensor to rear wheel caliper bracket top.
- Gently pull out sensor from rear wheel caliper bracket top.

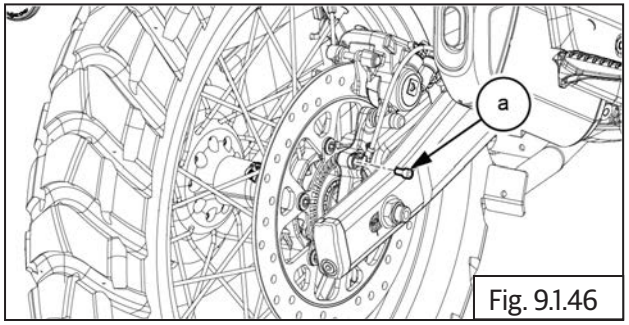

Fig. 9.1.46

	5 mm Allen socket with Ratchet

Assembly

9.3.4. Wheel Speed Sensor - Rear

- Gently locate sensor into rear wheel caliper.
- Locate and tighten hex flange head bolt **(M6) (a)** holding sensor to rear wheel caliper bracket top.

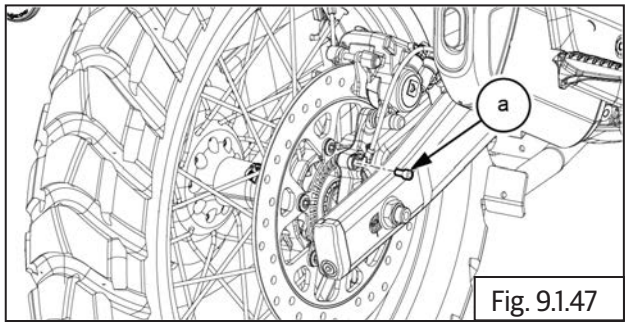

Fig. 9.1.47

	5 mm Allen socket with Ratchet
Torque	10 N-m/ 1.0 kgf-m

- Fix the double cable clips **(a)** to rear ABS sensor harness.

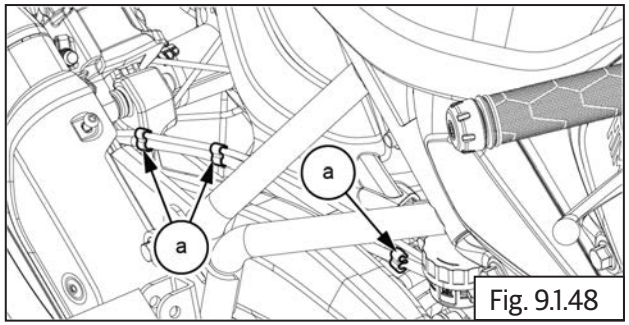

Fig. 9.1.48

- Disconnect ABS sensor coupler from rear RHS frame.

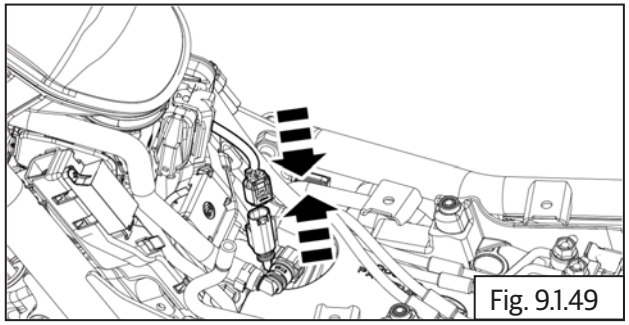
Fig. 9.1.49

- After assembling wheel speed sensor, check air gap with feeler guage.

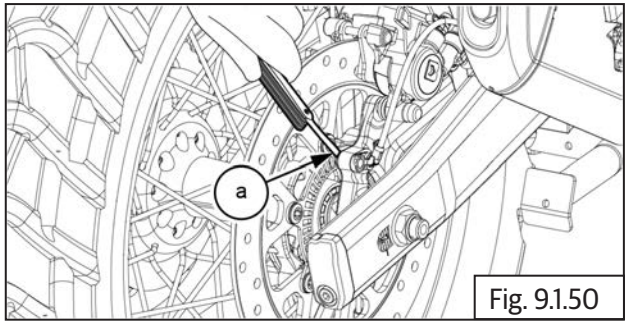

Fig. 9.1.50

9.3.5. Wheel Speed Sensor - Front

- Gently locate sensor into fork end LH.
- Locate and tighten hex flange bolt **(M6) (a)** holding sensor **(b)** to fork end LHS.
- Tighten the 2 Nos bolts on LHS front mudguard.

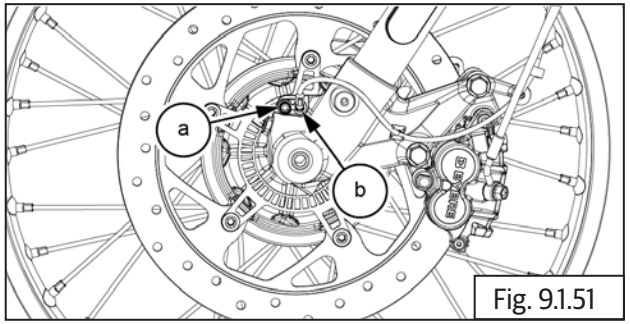

Fig. 9.1.51

	5 mm Allen socket with Ratchet
Torque	10 N-m/ 1.0 kgf-m

- Fix the double cable clip on ABS sensor harness

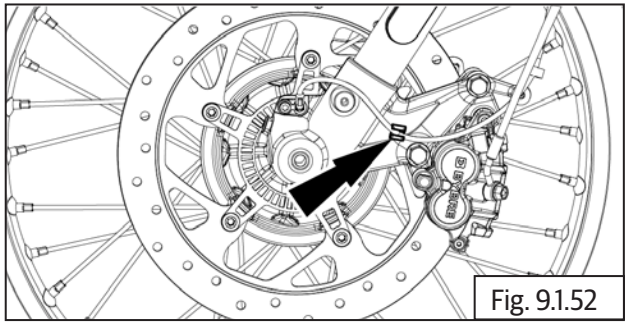
Fig. 9.1.52

- Connect the Front ABS sensor coupler **(a)** on near RHS air filter.

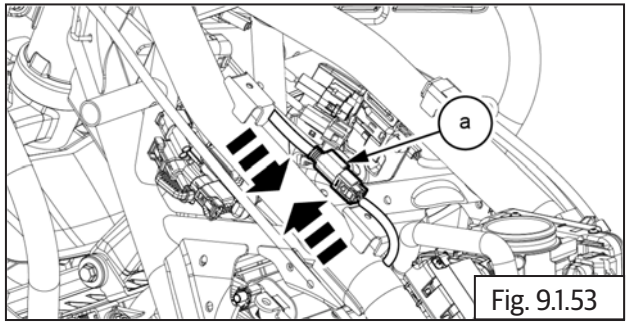

Fig. 9.1.53

- After assembling wheel speed sensor, check air gap with feeler guage.

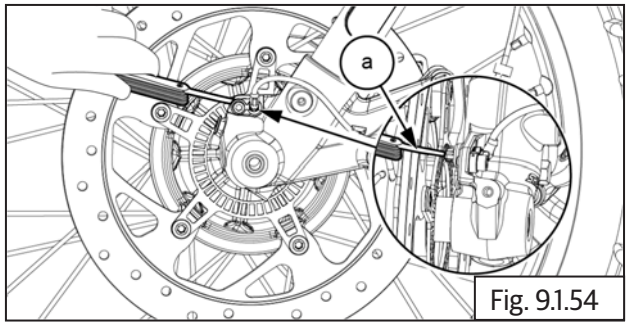

Fig. 9.1.54

⚠ WARNING

DO NOT interchange ABS unit/ECU from one motorcycle to another.

9.3.6 Modulator

- Brake hose color tags:
  - a) BLUE - Front Master Cylinder Assembly
  - b) GREEN - Front Brake Caliper
  - c) RED - Rear Brake Caliper
  - d) YELLOW - Rear Master Cylinder Assembly
- Ensure the sequence of the hoses is as per the color tags shown below.

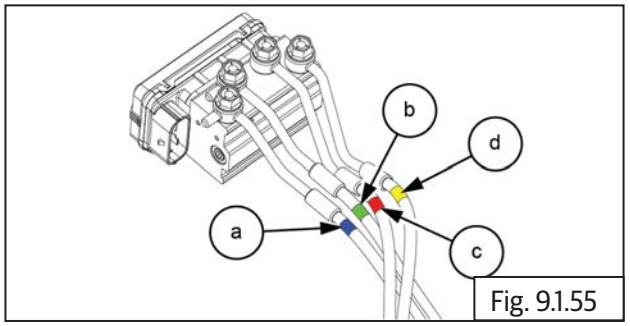

Fig. 9.1.55

- Locate 4 Nos. brake hoses into modulator.
- Support modulator suitably on a work table, keeping the color tags in mind, locate and tighten 4 Nos. banjo bolts **(a)** along with washers into modulator to fix brake hoses **(b).**

	12 mm socket with Ratchet
Torque	27-31 N-m / 2.7 -3.1 kgf-m

- Ensure the reference marks to align properly.

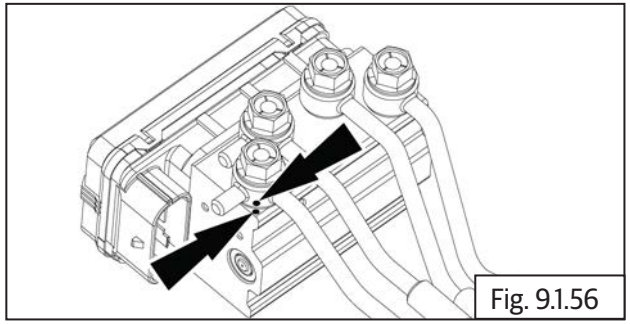
Fig. 9.1.56

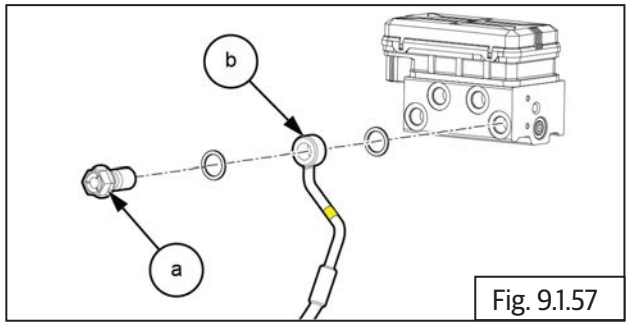

Fig. 9.1.57

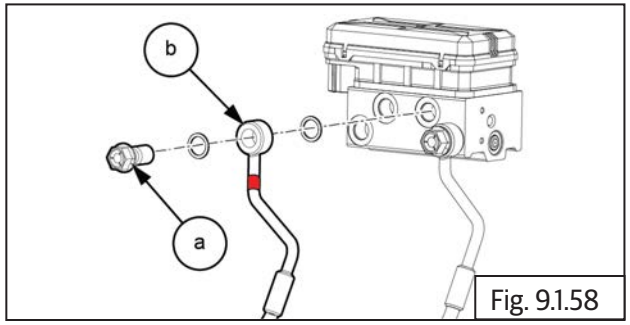

Fig. 9.1.58

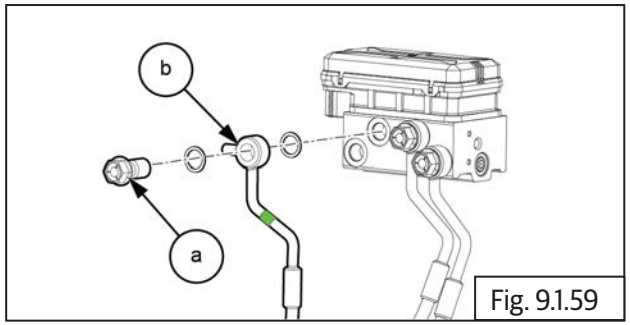

Fig. 9.1.59

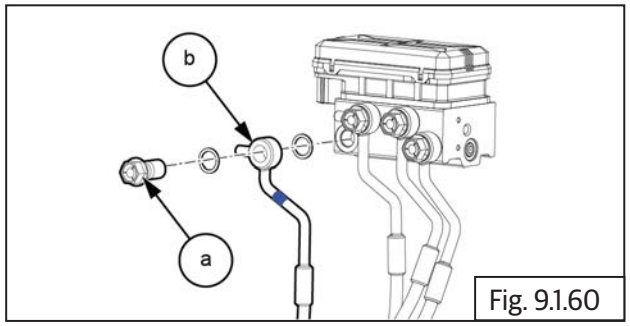

Fig. 9.1.60

- Install the 2Nos spacer top hats **(a)** and grommets **(b)** on bracket.

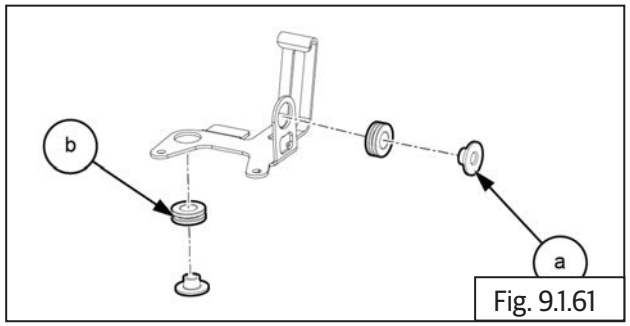

Fig. 9.1.61

- Install the bracket **(a)** on modulator.

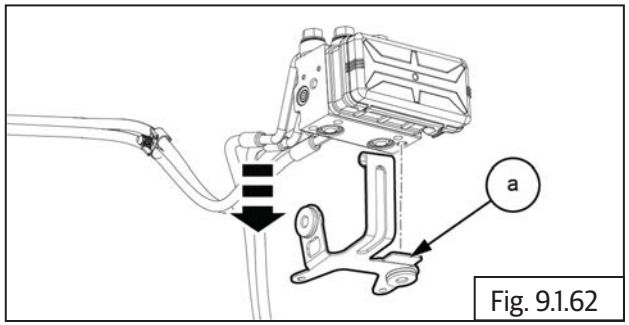

Fig. 9.1.62

- Locate and tighten the hex bolt 2Nos **(M6) (a)** on modulator bracket .

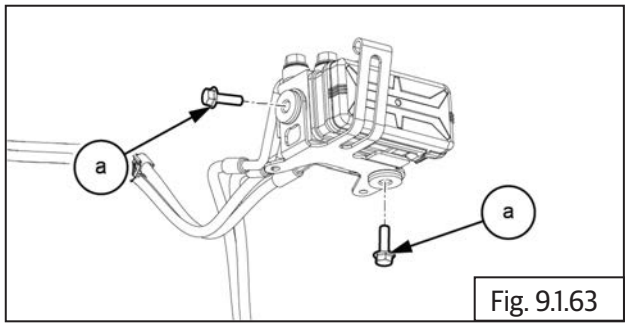

Fig. 9.1.63

	10 mm Socket with Ratchet
Torque	10 N-m/1.0 kgf-m

- Locate the modulator **(a)** along with bracket and 4 Nos. hoses on frame to install .

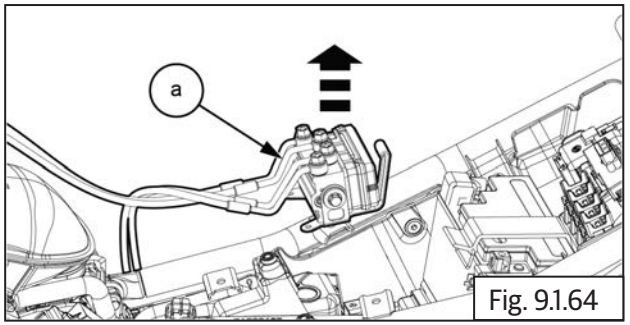

Fig. 9.1.64

- Locate and tighten 2Nos cap bolts **(a)** on modulator bracket.

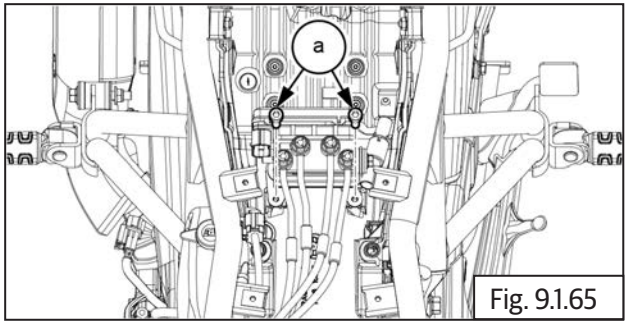

Fig. 9.1.65

	5 mm Allen Socket with Ratchet
Torque	5 N-m / 0 .5 kgf-m

- Connect the ABS modulator coupler

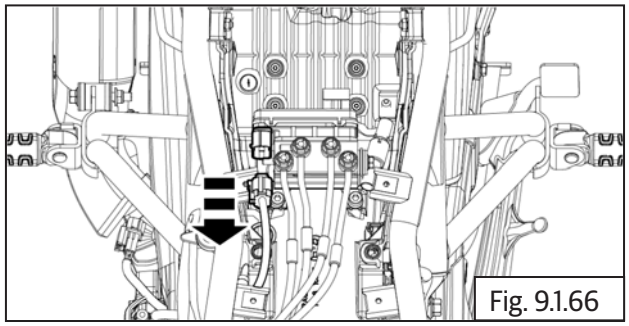

Fig. 9.1.66

- Locate retainer bracket **(b)** on chassis frame.
- Locate and tighten screw **(a)** on retainer braket.

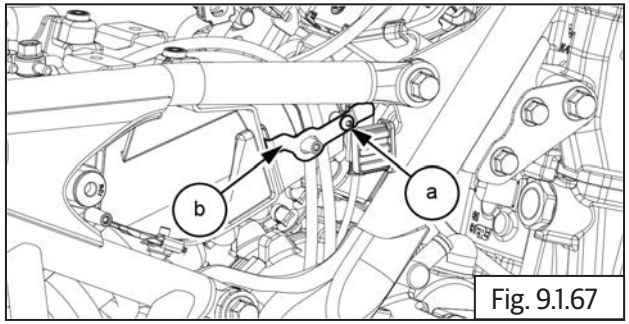

Fig. 9.1.67

	3 mm Allen Socket with Ratchet
Torque	1.5N-m/0.15 kgf-m

- Locate and tighten 2Nos screw **(a)** on expansion tank.

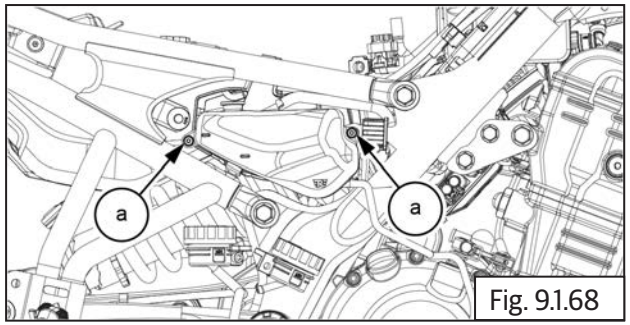

Fig. 9.1.68

	T20 Torx socket
Torque	4 N-m / 0.4 kgf-m

- Fix the double cable clips **(a)** on rear ABS hose.

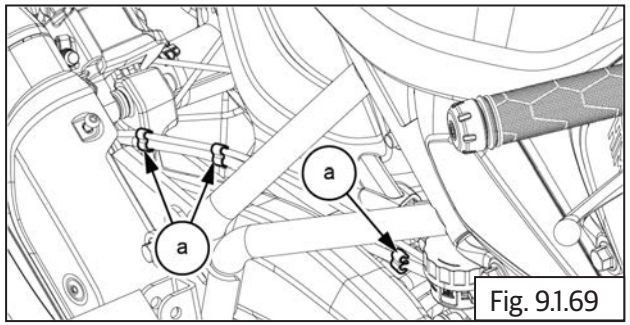

Fig. 9.1.69

- Fix the double cable clip **(a)** on ABS hose.
- Fix the cable strap **(a)** on ABS hose.

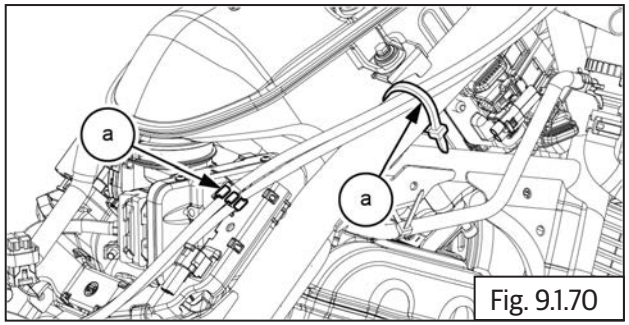

Fig. 9.1.70

- Locate and tighten the cap bolt **(M6) (a)** on brake line clip **(b)**.

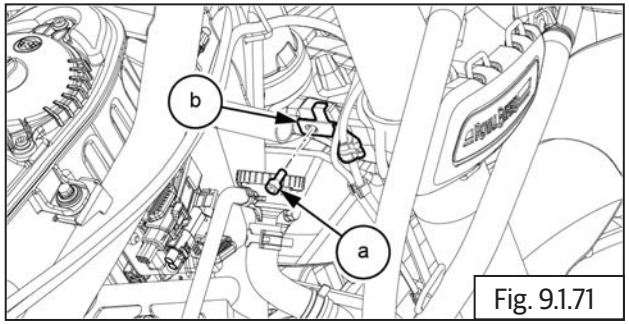

Fig. 9.1.71

	5 mm Allen Socket with Ratchet
Torque	10 N-m / 1.0kgf-m

- Locate and tighten the cap bolt **(M6) (a)** on ABS hose line.

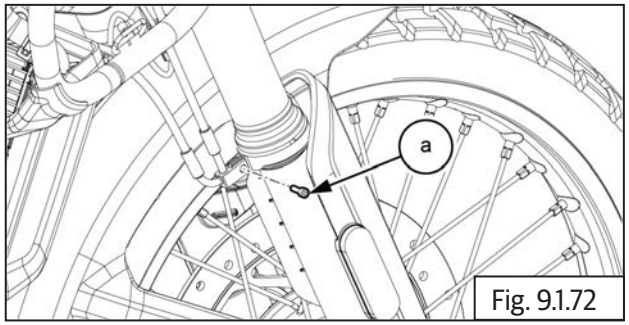

Fig. 9.1.72

	5 mm Allen Socket with Ratchet
Torque	10 N-m / 1.0kgf-m

- Locate and tighten the rear brake pressure switch with new copper washers **(a)** and ABS hose **(b)**.

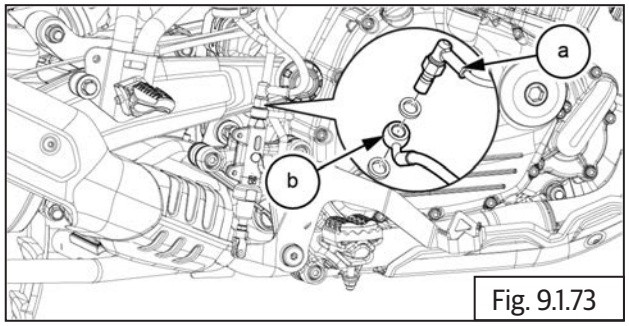

Fig. 9.1.73

	14mm Double End spanner
Torque	26 N-m/ 2.6 kgf-m

- Locate the heel guard **(a)**.

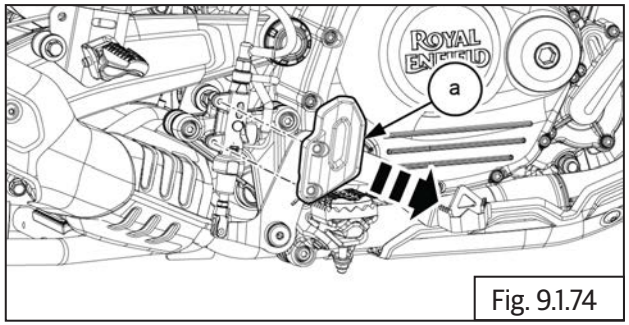

Fig. 9.1.74

- Locate and tighten the 2Nos cap bolts **(M6) (a)** on heel guard.

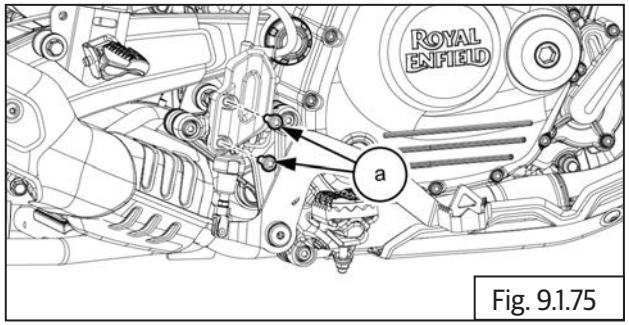

Fig. 9.1.75

	5mm Allen Socket
Torque	10N-m/ 1.0 kgf-m

- Fix the double cable clips 2 Nos **(a)** on pressure switch harness.

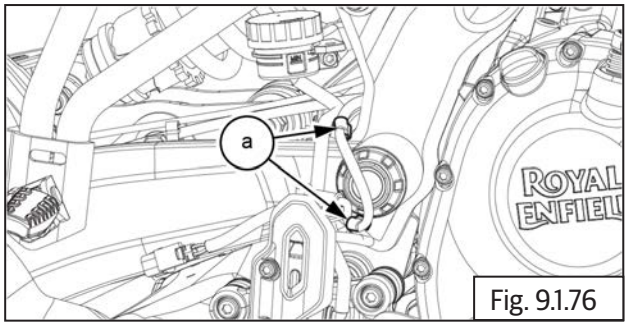

Fig. 9.1.76

- Connect rear brake pressure switch coupler **(a)**.

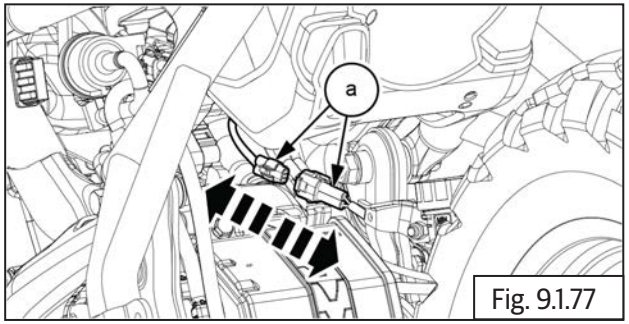

Fig. 9.1.77

- Tighten the banjo bolt **(a)** with new copper washer and ABS hose **(b)** on rear brake caliper.

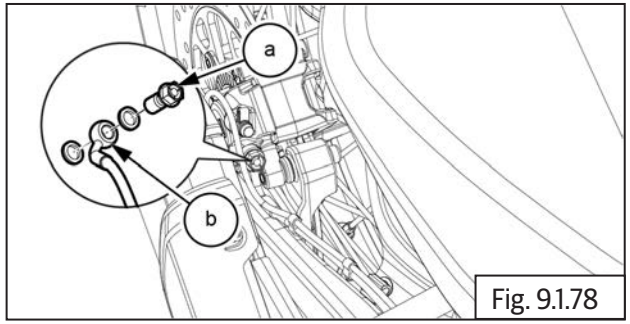

Fig. 9.1.78

	12 mm Socket with Ratchet
Torque	24 - 28 N-m / 2.4 -2.8 kgf-m

- Tighten the banjo bolt with new copper washer and ABS hose on front brake caliper.

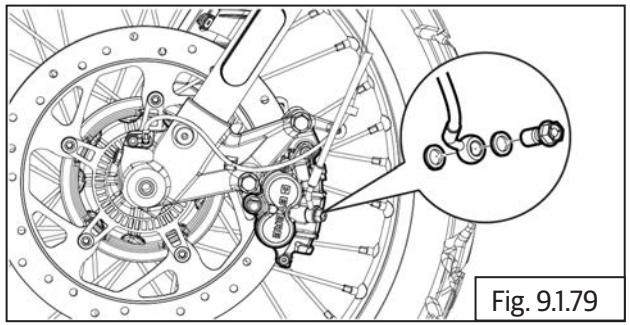
Fig. 9.1.79

	12 mm Socket with Ratchet
Torque	24 - 28 N-m / 2.4 -2.8 kgf-m

- Tighten the brake switch **(a)** with new copper washer and ABS hose **(b)** on front master cylinder..

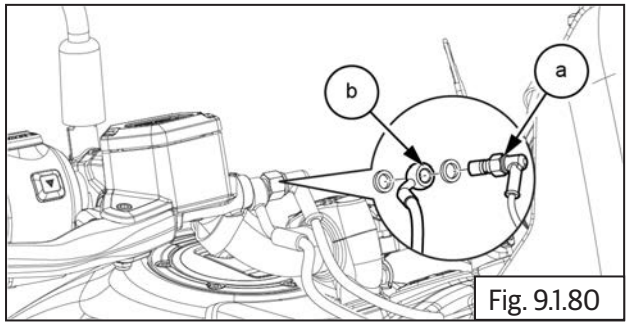

Fig. 9.1.80

	14 mm socket with Ratchet
Torque	24 - 28 N-m / 2.4 -2.8 kgf-m

- Fix the double cable clips **(a)** on front brake pressure switch wiring harness.

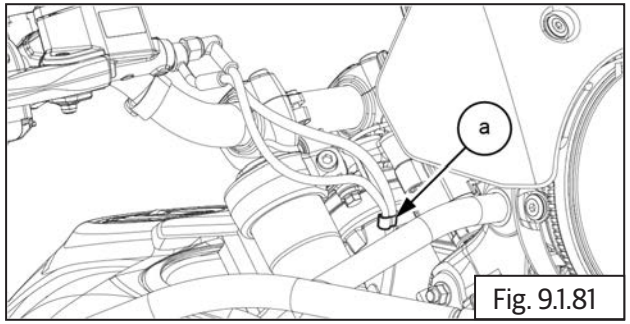

Fig. 9.1.81

- Locate harness clip **(a)** on RHS chassis frame.
- Tighten the hex head flange bolt **(M6)**.

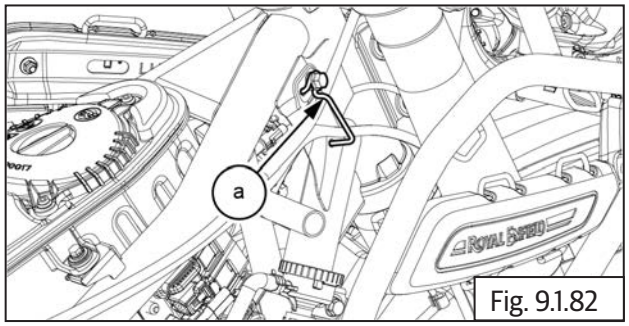

Fig. 9.1.82

	10 mm Socket with Ratchet
Torque	10 N-m / 1.0 kgf-m

- Connect the front brake pressure switch connector **(a)**.

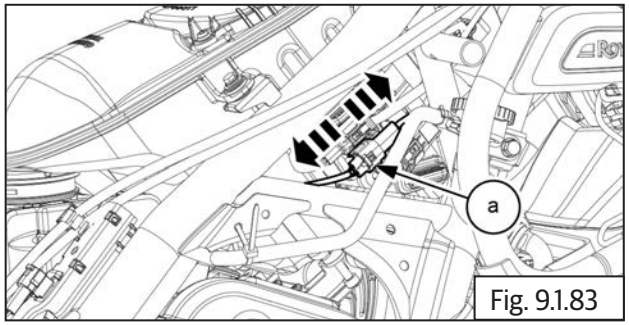

Fig. 9.1.83

- **Assemble the following parts:**
  - Fuel tank assembly.
  - Install the rider and pillion seat.
  - Side panel RH.

⚠ CAUTION

After assembly of all aggregates, ensure the following:

- **Fuel is refilled/top up into fuel tank.**
- **Fuel feed and return hoses are properly connected into the fuel rail.**
- **Wiring couplers to fuel pump and low fuel sensors are properly connected.**
- **EVAP hose pipes are properly connected.**

⚠ WARNING

Gasoline is extremely flammable and highly explosive. Improper handling can lead to fatal accident or serious injury.

9.3.7 ABS DTC Codes

S.No	DTC (P code)	Component	Failure Description
1	C1015	ABS pump	ABS pump/Motor Failure
2	C1019	ABS ECU	ABS ECU Relay Fault
3	C1021	ABS ECU	ABS ECU Internal Fault
4	C1024	ABS WSS	(GENERIC) ABS Wheel Speed Difference too high
5	C1031	ABS WSS	ABS Wheel Speed Circuit Open or Shorted (Rear)
6	C1032	ABS WSS	ABS Wheel Speed Intermittent (Rear)
7	C1033	ABS WSS	ABS Wheel Speed Circuit Open or Shorted (Front)
8	C1034	ABS WSS	ABS Wheel Speed Intermittent (Front)
9	C1048	Outlet valve	(AV) ABS Release Solenoid Circuit Open or high Resistance (Rear)
10	C1049	Outlet valve	(AV) ABS Release Solenoid Circuit Open or high Resistance (Front)
11	C1052	Inlet valve	(EV) ABS Apply Solenoid Circuit Open or high Resistance (Rear)
12	C1054	Inlet valve	(EV) ABS Apply Solenoid Circuit Open or high Resistance (Front)
13	C1058	ABS ECU	ABS Voltage Low
14	C1059	ABS ECU	ABS Voltage High
15	U2921	CAN communication	CAN Generic monitoring
16	U2922	CAN communication	High Speed CAN Communications Bus Fault
17	U2926	CAN communication	Cluster DLC / Timeout Failure

BLEEDING THE HYDRAULIC BRAKE SYSTEM WITH DOL TOOL (FRONT & REAR)

9.4. Preparation (Front Disc Brake)

- Use a Philips screwdriver to loosen and remove the screws of the front disc brake master cylinder.
- Remove the cap, and Diaphragm Plate with diaphragm.
- Remove the dust cap and place the suitable ring spanner on the bleeding nipple and attach a Vinyl Pipe (transparent).
- Thereafter, take a Clean glass / Plastic container (transparent) with fresh brake fluid, and dip the other end of the vinyl pipe (transparent) in it (make sure that the vinyl pipe is always submerged in the fluid during the bleeding process).

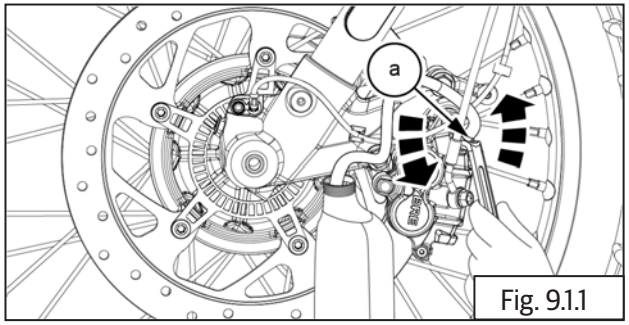

Fig. 9.1.1

- Connect the DOL tool switch "ON" the ignition.

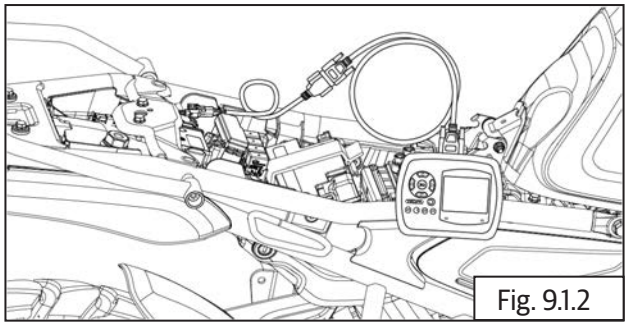
Fig. 9.1.2

Procedure

- Select – F1 Diagnosis.

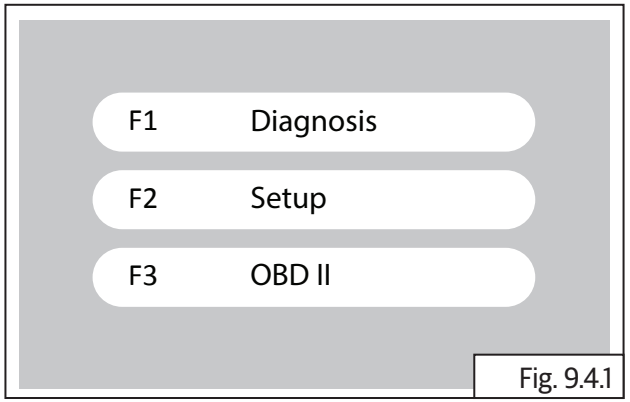

Fig. 9.4.1

- Select – Himalayan - K1G.

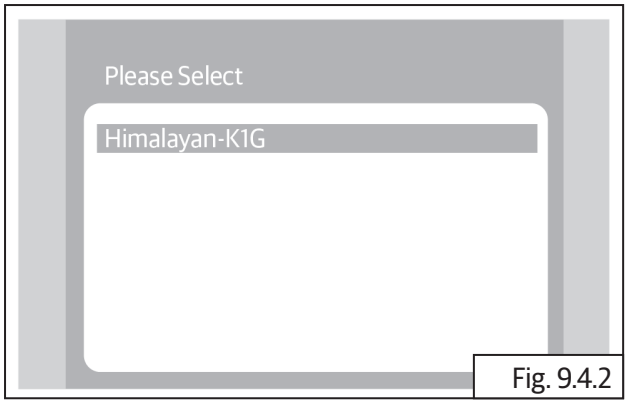

Fig. 9.4.2

- Select – Bosch ABS.

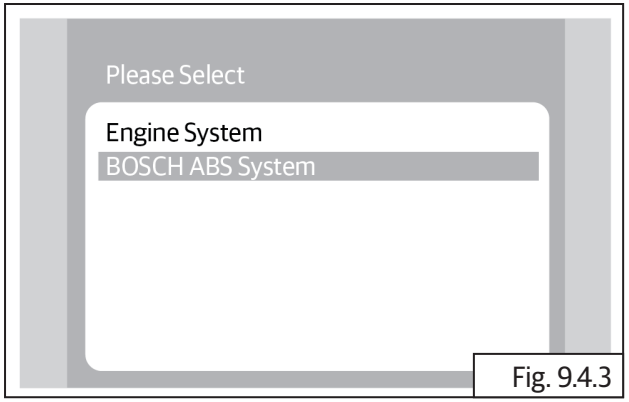

Fig. 9.4.3

- Default Screen.

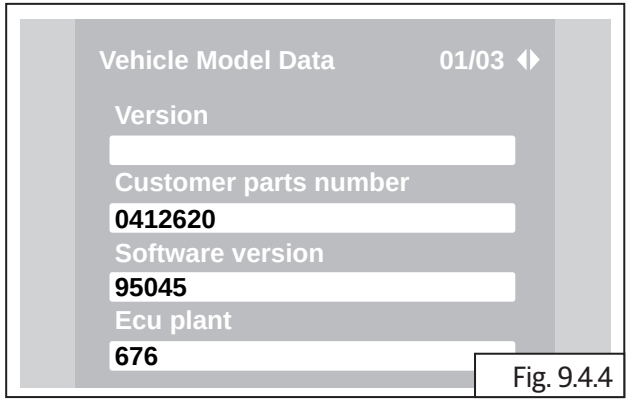

Fig. 9.4.4

- Press C.

Fig. 9.4.5

- Select - Spl Function.

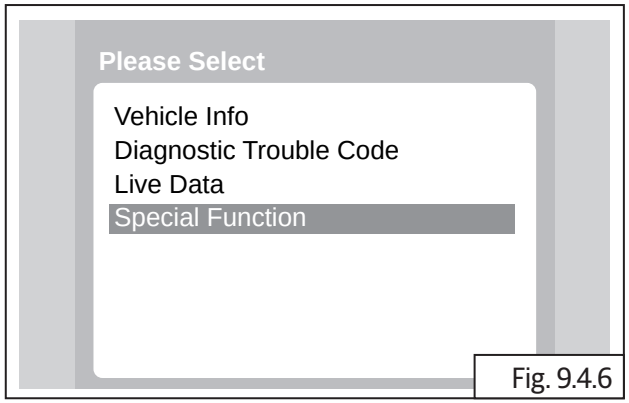

Fig. 9.4.6

- Select - Repair Air Bleed.

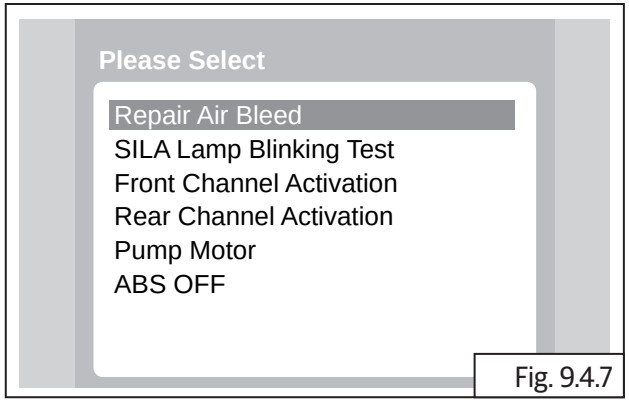

Fig. 9.4.7

- Default Screen.

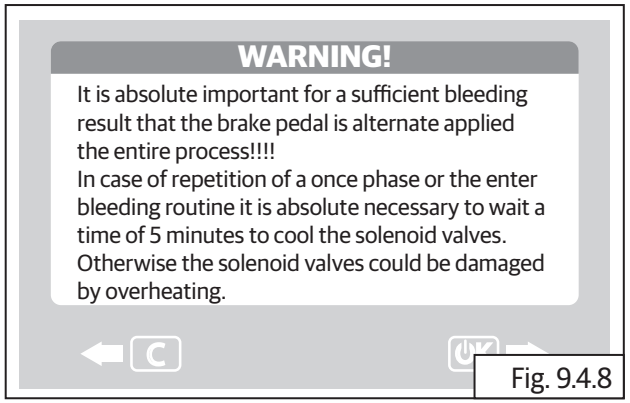

Fig. 9.4.8

- Default Screen.

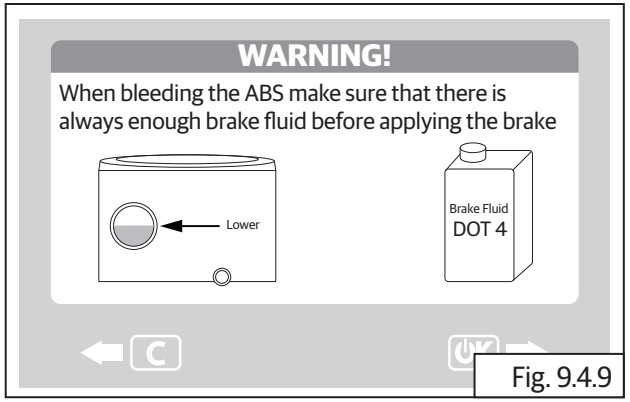

Fig. 9.4.9

- Loosen the bleeder nipple.

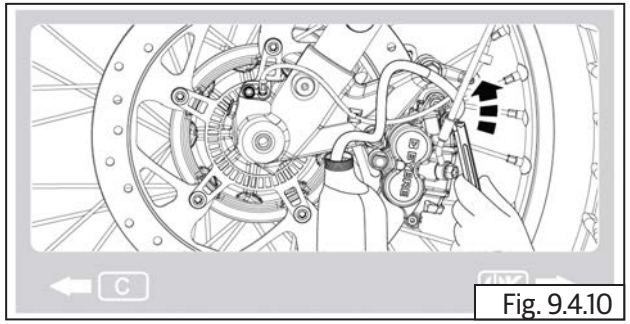

Fig. 9.4.10

- Operate the brake lever.

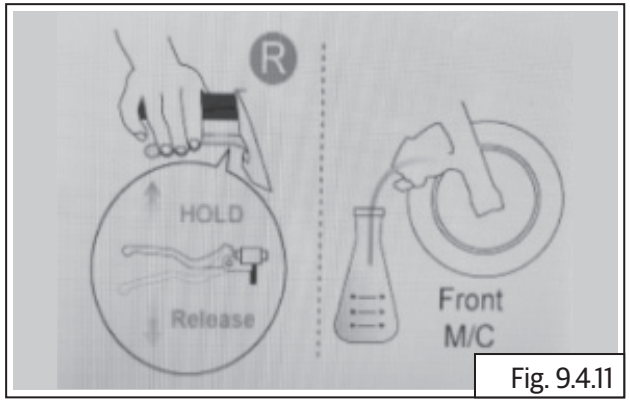

Fig. 9.4.11

- Hold the lever in pressed condition and tighten the bleeder nipple.

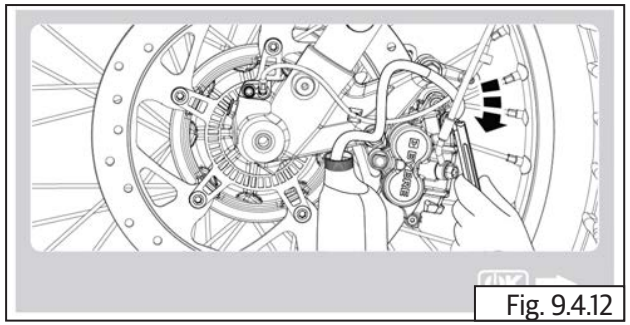

Fig. 9.4.12

- Loosen the bleeder nipple – (Brake lever in released condition).

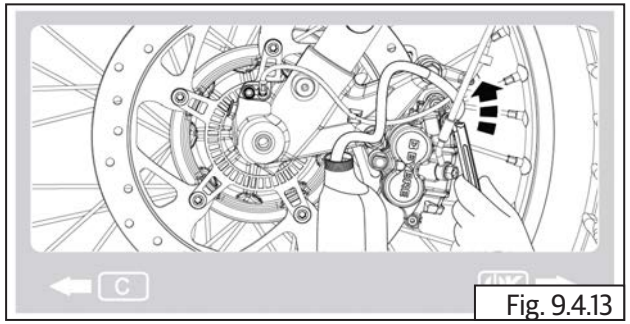

Fig. 9.4.13

- Operate the brake lever till the next window open in DOL.

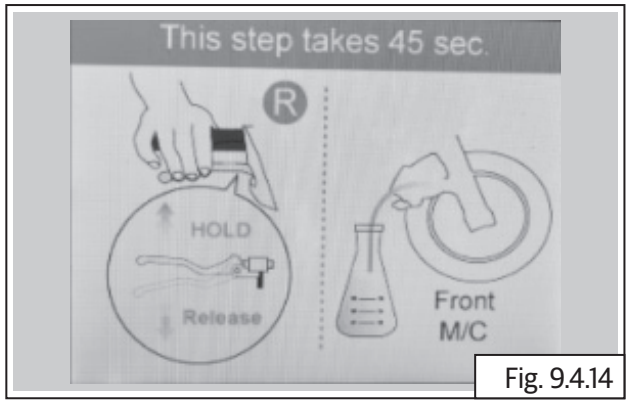

Fig. 9.4.14

- Hold the brake lever in pressed condition and tighten the bleeding nipple.

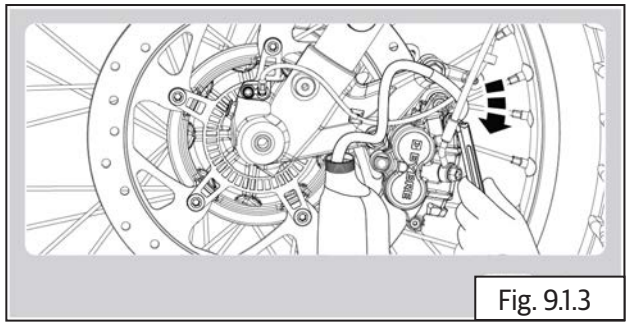

Fig. 9.1.3

- During this operation pump will run and expel the air trapped in the system through bleeder nipple.

9.5. Reassembly

- Switch OFF the ignition.
- Disconnect the DOL Tool.
- Remove the vinyl pipe and remove the ring spanner.
- Refit the dust cap (make sure that there is no leak from the bleeder nipple).
- Refit the diaphragm with diaphragm plate of the master cylinder.
- Refit the master cylinder cap taking care that the vent slot in the cap is facing rider.

9.6. Preparation (Rear Disc Brake)

- Remove the reservoir cap of the rear disc brake.
- Remove the Diaphragm Plate with diaphragm.
- Remove the dust cap and place the suitable ring spanner on the bleeding nipple.
- Attach a Vinyl Pipe (transparent).
- Thereafter, take a Clean glass / Plastic container (transparent) with fresh brake fluid, and dip the other end of the vinyl pipe (transparent) in it (make sure that the vinyl pipe is always submerged in the fluid during the bleeding process).

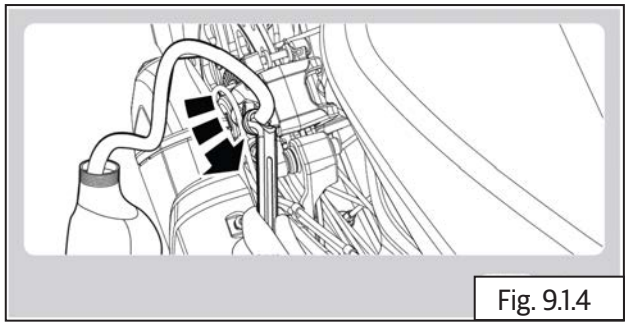

Fig. 9.1.4

- Connect the DOL tool switch on the ignition

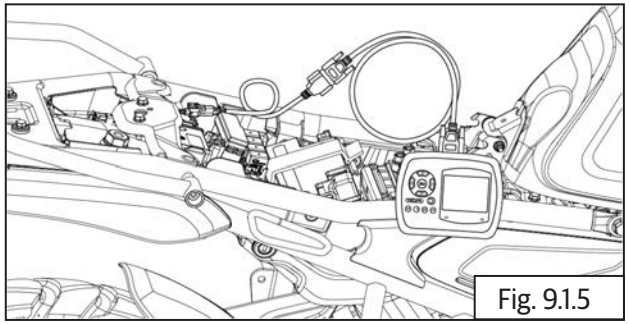

Fig. 9.1.5

- Loosen the bleeder nipple.

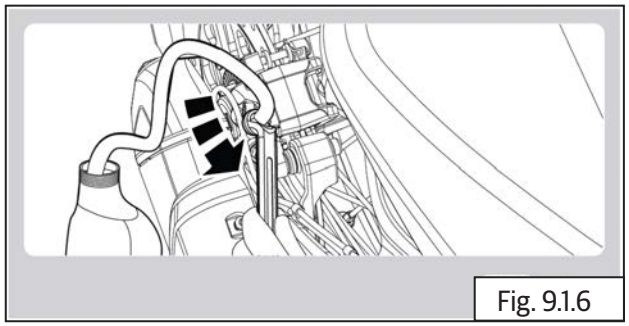

Fig. 9.1.6

- Default Screen.

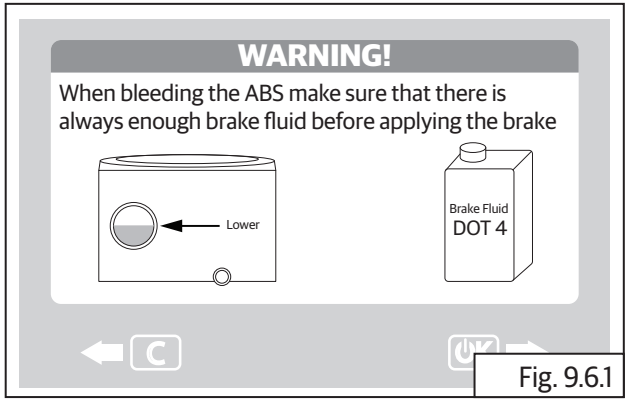

Fig. 9.6.1

- Operate the brake lever.

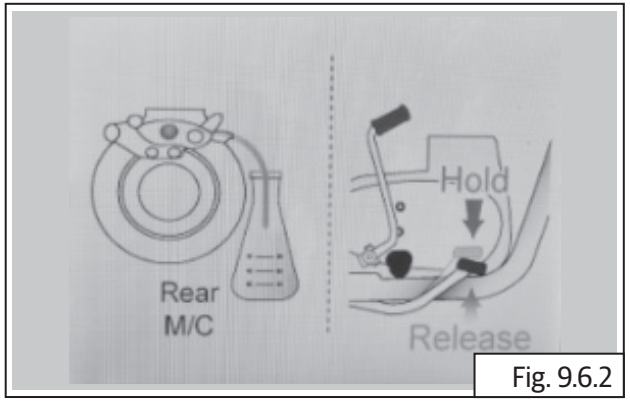

Fig. 9.6.2

- Hold the brake Pedal in pressed condition and tighten the bleeding nipple.

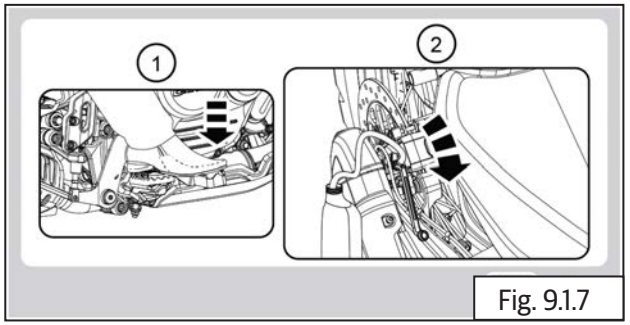

Fig. 9.1.7

- Loosen the bleeder nipple – (Brake lever in released condition)

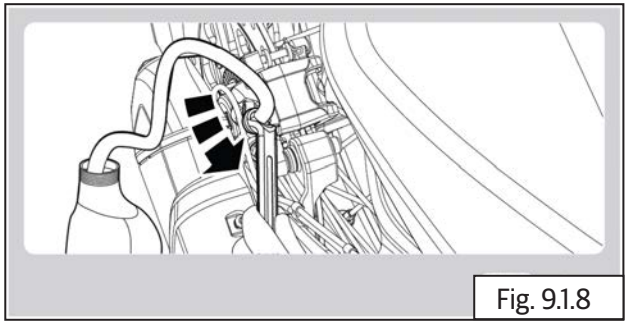
Fig. 9.1.8

- Operate the brake lever until the next window opens in DOL.

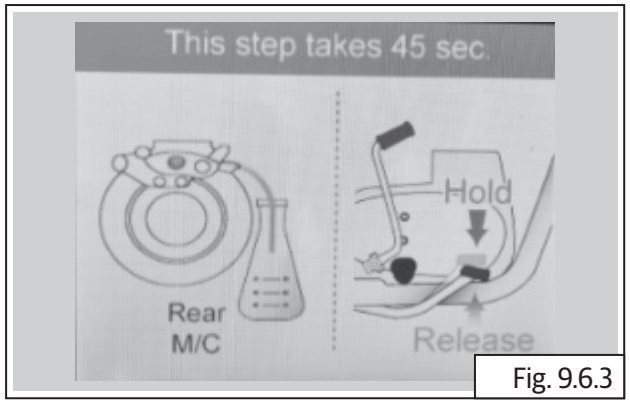

Fig. 9.6.3

- Hold the brake lever in pressed condition and tighten the bleeding nipple.

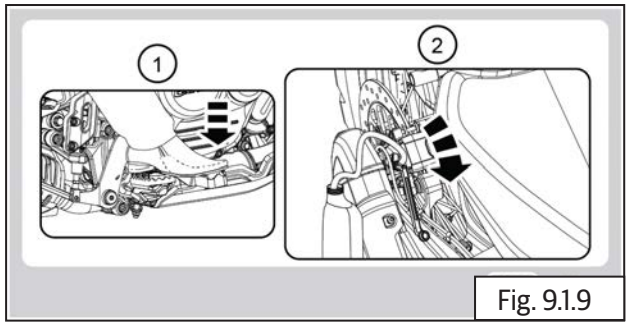

Fig. 9.1.9

- During this operation pump will run and expel the air trapped in the system through bleeder nipple

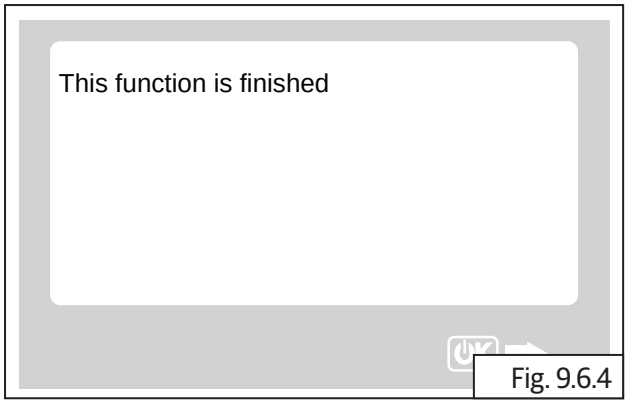

Fig. 9.6.4

9.7. Reassembly

- Switch OFF the ignition and disconnect and remove the DOL tool.
- Remove the vinyl pipe and remove the ring spanner.
- Refit the dust cap (make sure that there is no leak from the bleeder nipple).
- Refit the diaphragm with diaphragm plate of the reservoir.
- Refit the reservoir cap.

BRAKE BLEEDING (FRONT & REAR)

MANUAL METHOD

9.8. Brake Bleeding

⚠ CAUTION

Ensure the motorcycle is upright on a firm and flat surface.

Support motorcycle with suitable equipment below cradle frame.

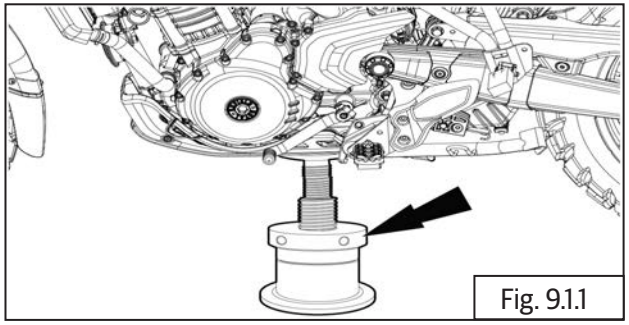

Fig. 9.1.1

⚠ CAUTION

Do not spill brake fluid on any part of the motorcycle as it will damage the painted/ plastic surfaces.

⚠ WARNING

Ensure brake fluid does not get in contact with eyes and skin. In-case of exposure wash affected area thoroughly with water. Seek medical attention immediately if any irritation persists.

Keep out of reach of children.

Dispose drained brake fluid carefully and responsibly.

⚠ WARNING

Brake fluid is Hygroscopic hence, absorbs moisture from air. Ensure fluid reservoirs caps are closed properly.

If moisture in the brake system may cause damage to brake parts and fluid, causing reduction in braking efficiency; which in turn may lead to fatal accidents.

NOTE

- *Use brake fluid from sealed containers only.*
- *Use only DOT4 specification brake fluid listed in technical specifications .*
- *Ensure ignition switch and stop switch are in ON position.*

9.8.1. Front Brake Bleeding

- Loosen and remove 2 Nos. screws **(a)** from front brake reservoir tank.

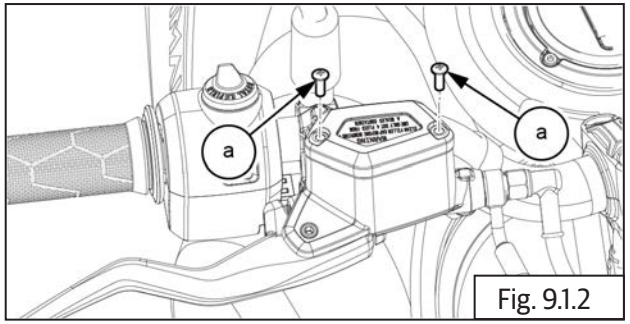

Fig. 9.1.2

	Screw driver phillips

- Remove reservoir cap **(a)** from front brake reservoir tank **(b)**.

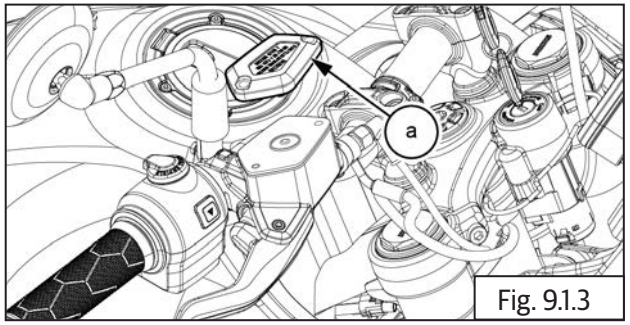

Fig. 9.1.3

- Remove reservoir plate diaphragm **(a)** from front brake reservoir tank **(b)**.

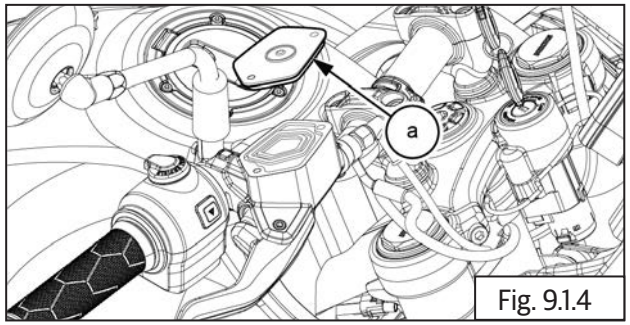

Fig. 9.1.4

- Remove reservoir diaphragm **(a)** from front brake reservoir tank **(b)**.

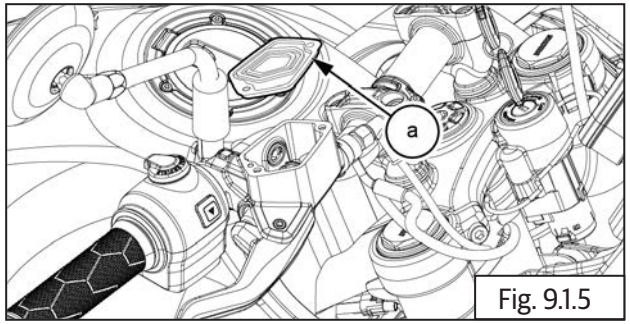

Fig. 9.1.5

- Gently top up fresh brake fluid **(a)** into reservoir **(b)**.
- Do not over fill as it may cause malfunctioning of some parts due to brake fluid spillage.

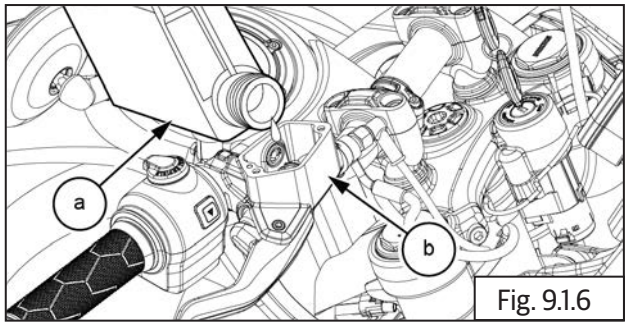

Fig. 9.1.6

- Locate diaphragm and cap **(a)** on the reservoir and DO NOT fasten with screws.

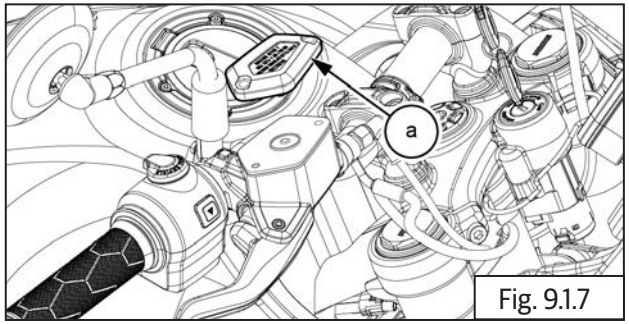

Fig. 9.1.7

- Remove rubber cap **(a)** from bleeder valve from front caliper on front wheel RH.

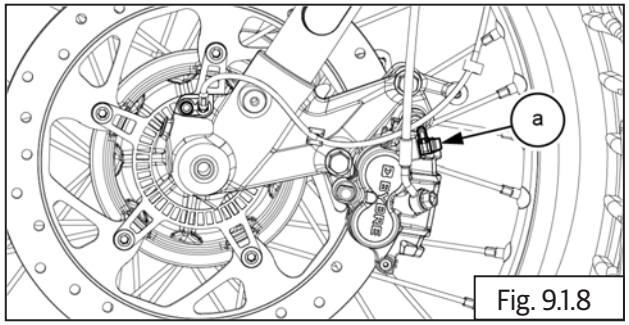

Fig. 9.1.8

- Dip bleeder hose **(a)** one end into a container **(b)** with fresh brake fluid to avoid air passage into bleeder valve.
- Insert bleeder hose other end into bleeder valve **(c)** on front caliper to drain used oil.

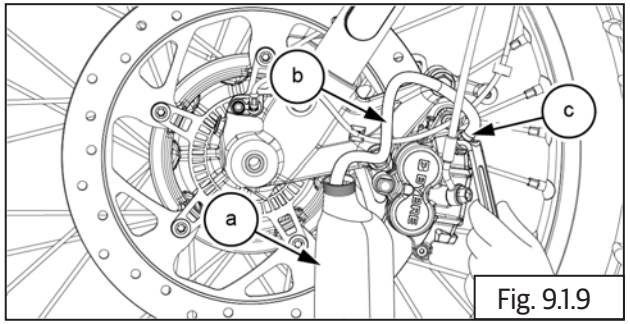

Fig. 9.1.9

NOTE
• *Use brake fluid from new, sealed containers only.* • *Use only DOT4 specification brake fluid listed in technical specifications.*

- Gently pump brake lever until brake is effective.
- Once brake lever is effective, hold it in place.

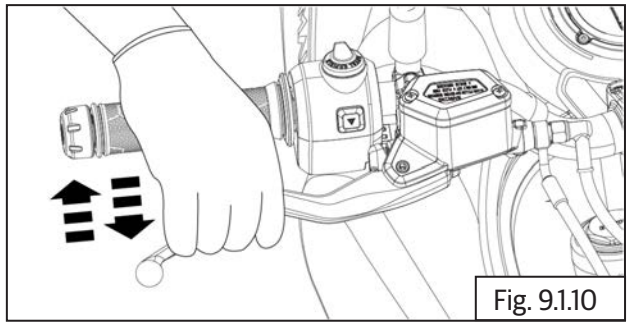

Fig. 9.1.10

- While holding brake lever, quickly open and close bleeder valve **(M6) (a)**.

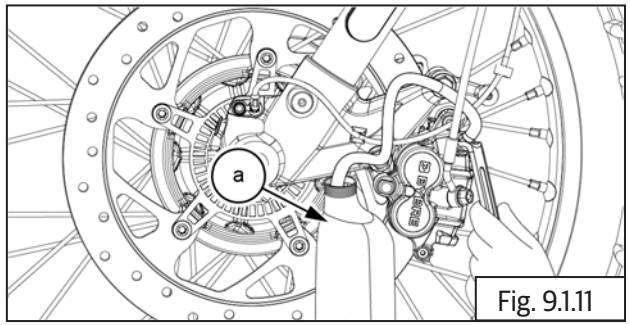

Fig. 9.1.11

	11 mm Ring spanner and air bleeder.

- Release the brake lever **(a)**.

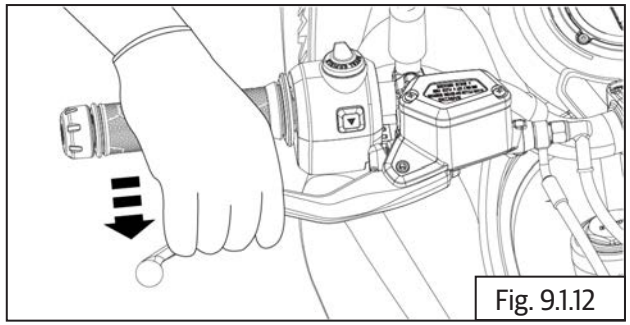

Fig. 9.1.12

- Gently top up fresh brake fluid **(a)** into reservoir **(b)**.
- Do not over fill as it may cause malfunctioning of some parts due to brake fluid spillage.

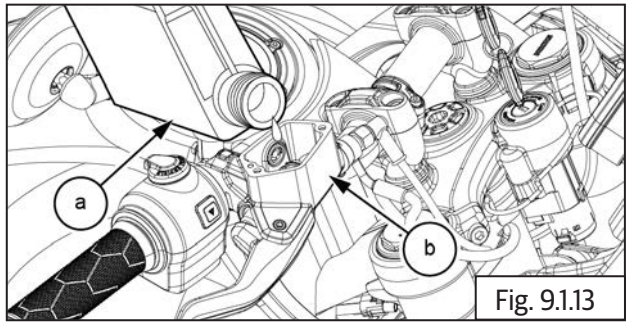

Fig. 9.1.13

- Repeat this operation until air from the system is released completely. Observe bleeder hose. As air in the system is cleared, bubbles stop appearing in hose.

⚠ CAUTION

While bleeding the brake system always ensure brake fluid is above min level BUT below "Max" level. Never allow the brake fluid go below minimum level to avoid air entering brake system. Always fill the brake fluid from sealed container only.

Do not leave the master cylinder cap and or brake fluid container open for long as brake fluid is highly hygroscopic in nature a and will loose its properties if exposed to atmospheric conditions.

- Inspect brake lever efficiency.

NOTE

- *The fluid level must be checked often during the bleeding operation and top up with fresh brake fluid as necessary.*
- *Gently tap brake hose for proper bleeding performance.*
- *Check brake fluid level after completion of brake bleeding.*
- *Whenever the modulator is removed or replaced the brake bleeding time will be longer as brake fluid will have to travel from master cylinder to modulator and then to wheel caliper*
- *Whenever bleeding the brake system, it is always recommended to bleed both the front and rear brakes.*

- Remove bleeder hose **(a)** from bleeder valve **(b)**.

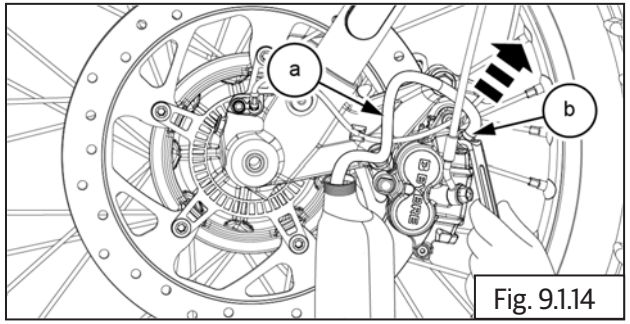

Fig. 9.1.14

- Close rubber cap **(a)** on bleeder valve **.**
- Ensure cap is locked properly to avoid exposure to dust or mud.

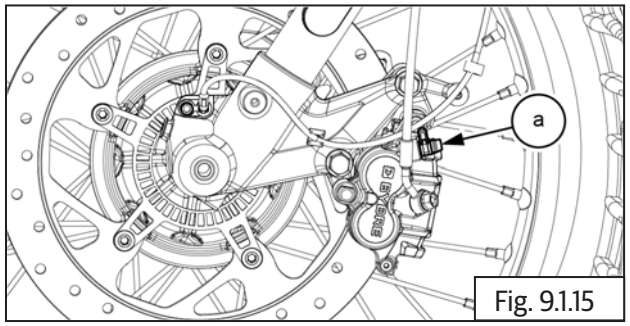

Fig. 9.1.15

- Install reservoir diaphragm **(a)** into front brake reservoir tank.

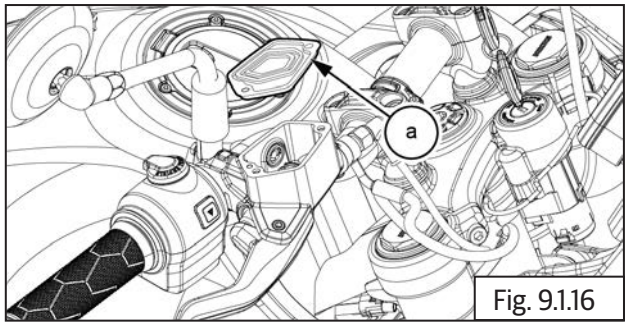

Fig. 9.1.16

- Install reservoir plate diaphragm **(a)** into front brake reservoir tank **(b)**.

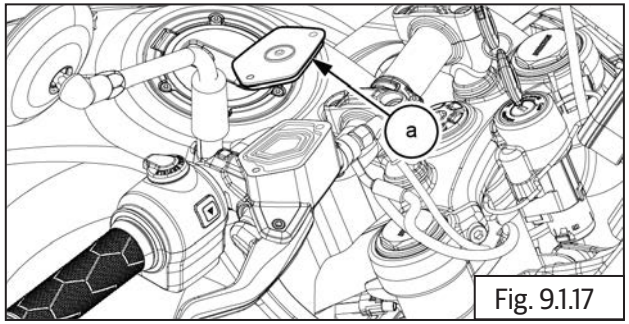

Fig. 9.1.17

- Close the reservoir cap and tighten 2 Nos. screws **(a)** into front brake reservoir tank **(b)**.

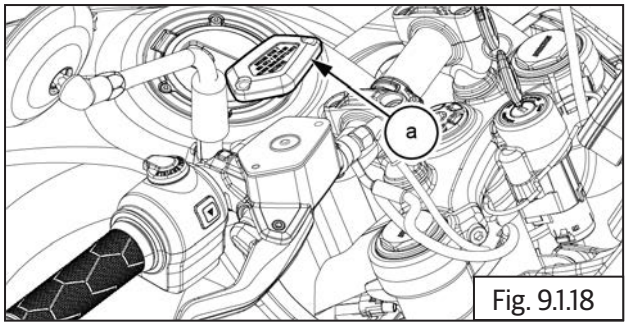

Fig. 9.1.18

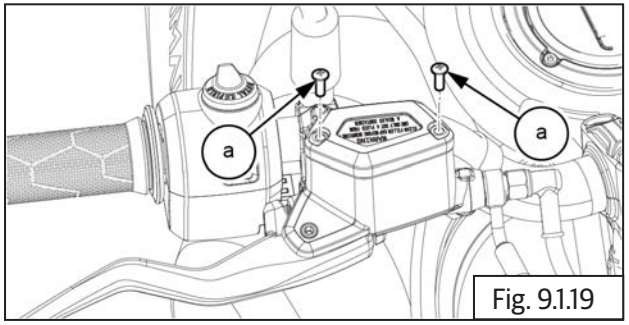

Fig. 9.1.19

	Trox Socket with Ratchet
Torque	1.1 - 1.4 N-m / 0.11 - 0.14 kgf-m

9.8.2. Front Brake Fluid Leakage

⚠ CAUTION
Ensure motorcycle is placed on a flat surface resting it on ramp/center stand.

NOTE
• *Inspect fluid level at every 5000 Km. Replace fluid after 20,000 Km.*

- Inspect fluid level, visible in window glass on front reservoir tank **(a)**.
- Ensure brake fluid level is always above middle of the window.

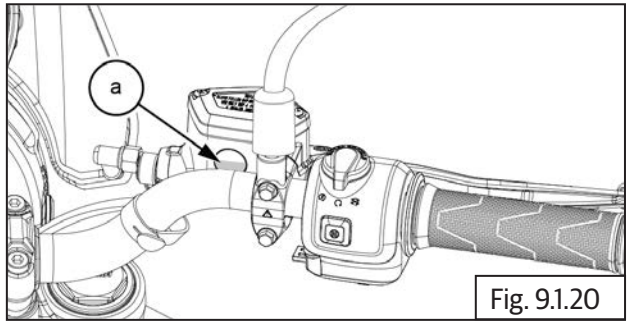

Fig. 9.1.20

- If oil level is below 'MIN', inspect leakage at front brake hoses and front master cylinder banjo bolt.

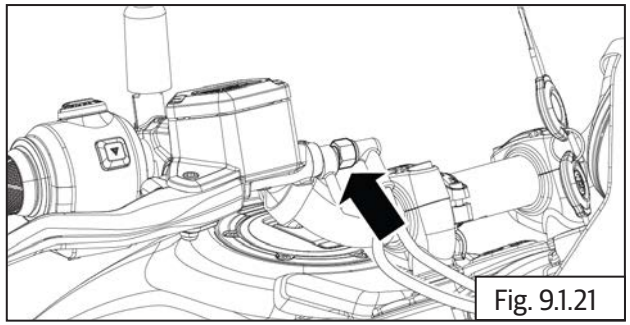
Fig. 9.1.21

- Inspect leakage at caliper banjo bolt.

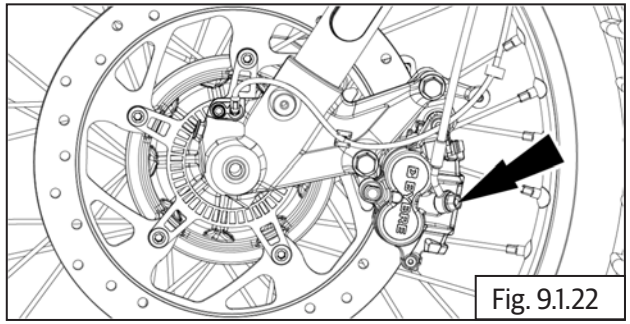
Fig. 9.1.22

- Inspect leakage on brake disc from caliper piston.

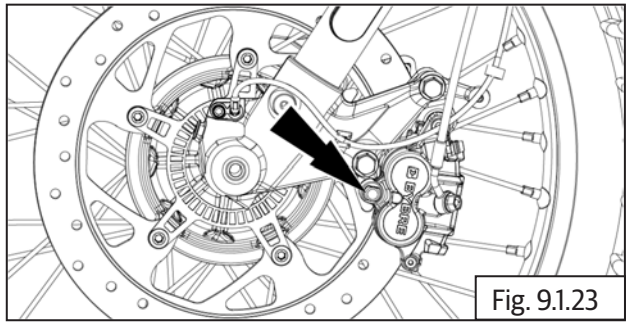
Fig. 9.1.23

- Inspect fluid leakage at hoses at ABS modulator.

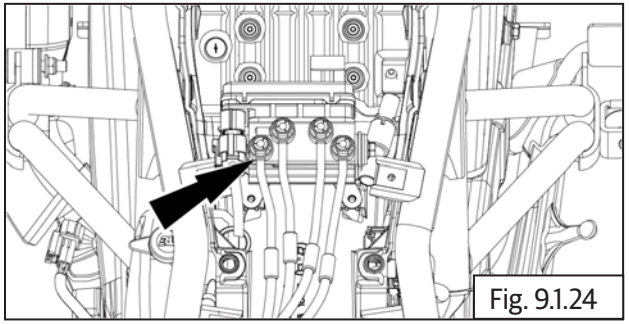
Fig. 9.1.24

9.8.3. Front Brake Fluid Top up

- Loosen and remove 2 Nos. screws **(a)** from front brake reservoir tank.

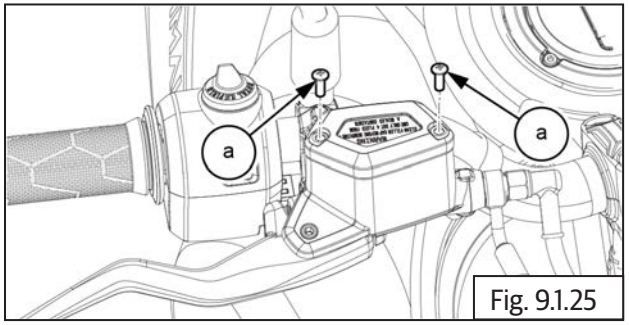

Fig. 9.1.25

	Screw driver

- Remove reservoir cap **(a)** from front brake reservoir tank **(b)**.

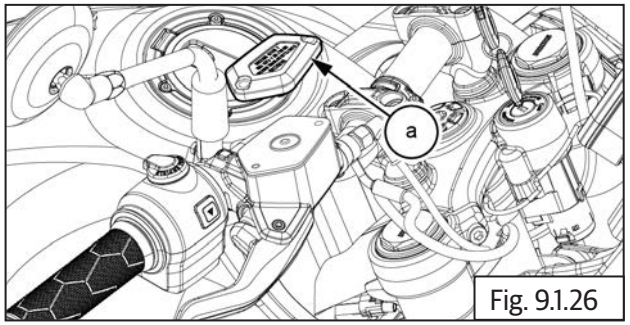

Fig. 9.1.26

- Remove diaphragm plate **(a)** from front brake reservoir tank.

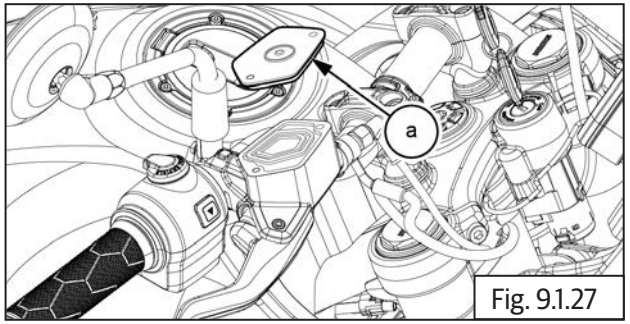

Fig. 9.1.27

- Remove diaphragm **(a)** from front brake reservoir tank.

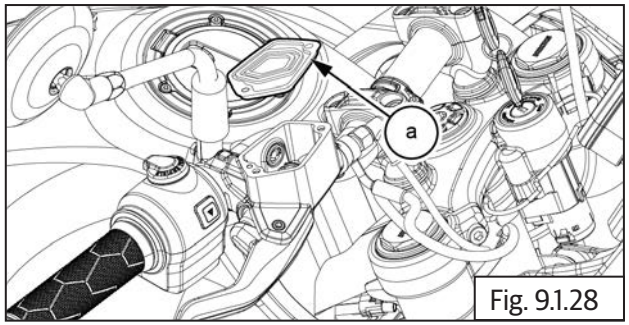

Fig. 9.1.28

- Top up fresh fluid **(a)** into reservoir tank **(b)** up to 'top of the window.
- Do not over fill as it may cause malfunctioning of some parts due to brake fluid spillage.

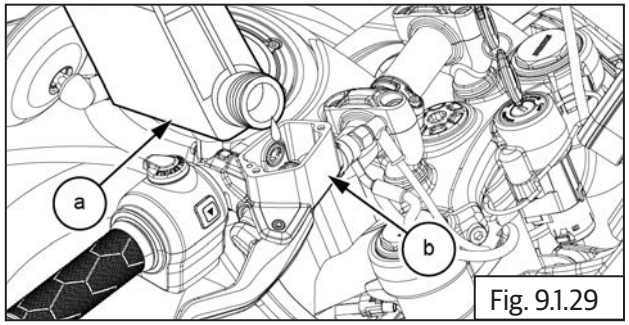

Fig. 9.1.29

9.8.4. Rear Brake Bleeding

⚠ CAUTION

Ensure the motorcycle is upright on a firm and flat surface.

Support motorcycle with suitable equipment below cradle frame.

- Rear brake reservoir is located near rear wheel on cradle frame.
- Open rear brake reservoir cap **(a)** from reservoir **(b)**.

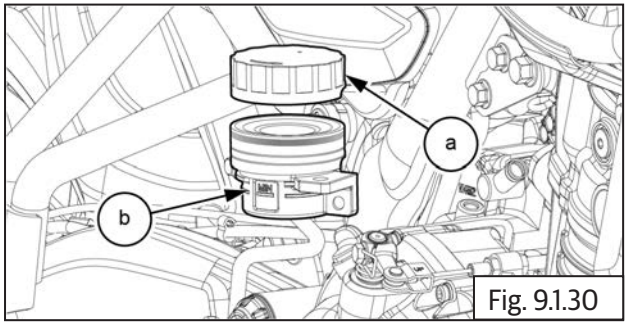

Fig. 9.1.30

- Open the diaphragm plate **(a)** and diaphragm **(b)** from reservoir.

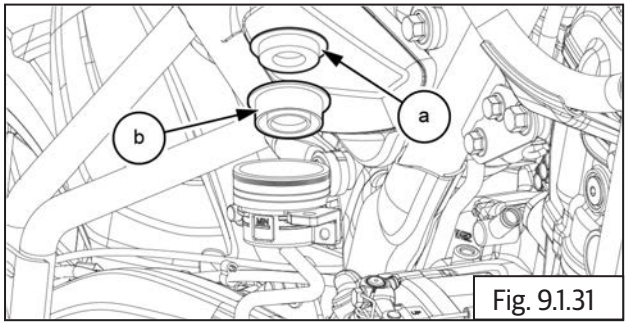

Fig. 9.1.31

NOTE

- *Use brake fluid from sealed containers only.*
- *Use only DOT4 specification brake fluid listed in technical specification Information .*

- Fill fresh brake fluid **(a)** into reservoir **(b)**.

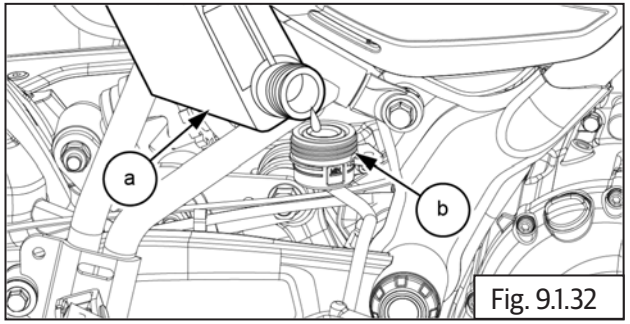

Fig. 9.1.32

- Do not over fill as it may cause malfunctioning of some parts due to brake fluid spillage.
- Locate the reservoir cap **(a)** on the tank **(b)** and ensure it is seated properly.

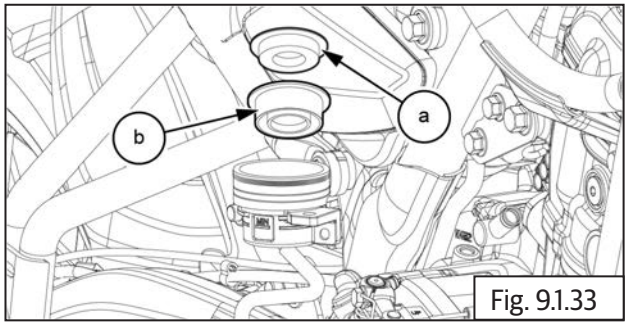

Fig. 9.1.33

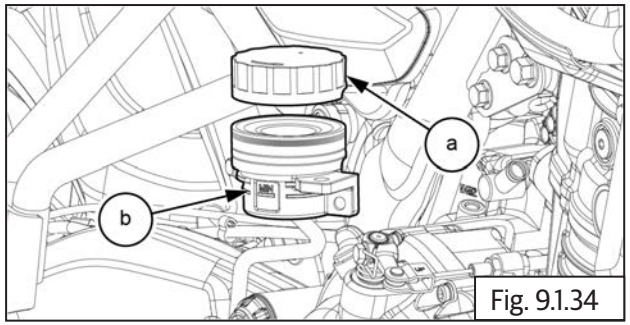

Fig. 9.1.34

- Locate rear brake bleeder valve on rear wheel brake caliper, behind silencer.
- Open rubber cap **(a)** from rear brake bleeder valve **(b)**.

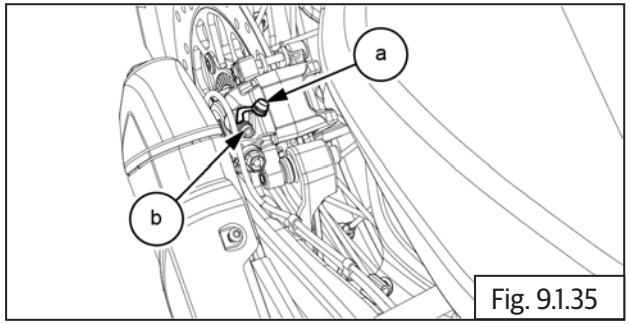

Fig. 9.1.35

- Dip bleeder hose **(a)** one end into a container **(b)** with fresh brake fluid to avoid air passage into bleeder valve.
- Insert bleeder hose other end into bleeder valve **(M6) (c)** on front caliper to drain used oil.

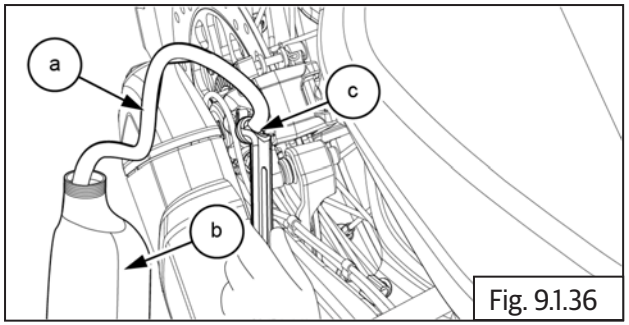

Fig. 9.1.36

	11 mm Ring spanner

- Gently pump rear brake pedal **(a)** until pumping becomes hard and then hold it in place.

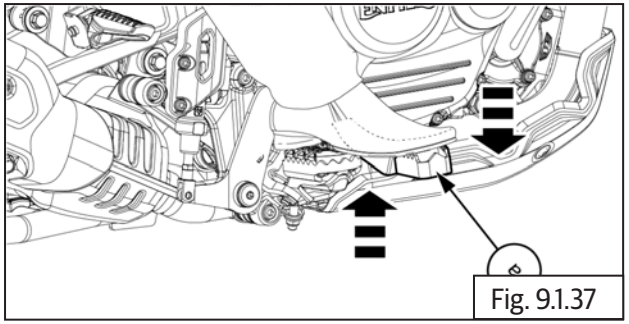
Fig. 9.1.37

- While holding brake, quickly open and close bleeder valve .

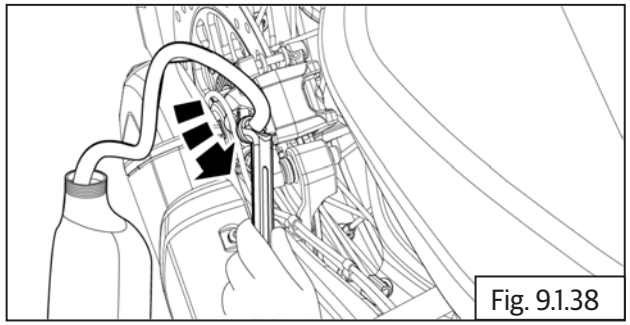

Fig. 9.1.38

- Repeat this operation until air from system is released completely.
- Inspect brake lever efficiency.

NOTE

- *The fluid level must be checked often during the bleeding operation and top up with fresh brake fluid as necessary.*
- *Gently tap brake hose for proper bleeding performance.*
- *Check brake fluid level after completion of brake bleeding.*

- Remove bleeder hose **(a)** from bleeder valve on rear caliper.

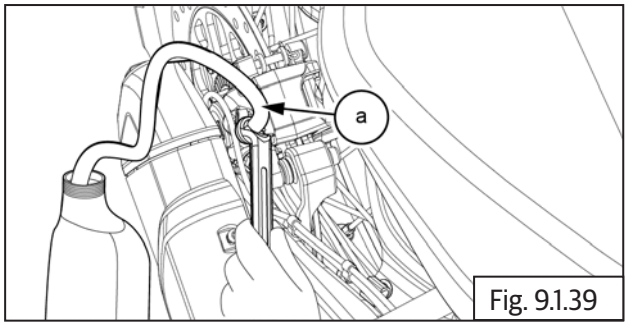

Fig. 9.1.39

- Close bleeder valve **(a)** rubber cap **(b)**.
- Ensure cap is locked properly to avoid exposure to dust or mud.

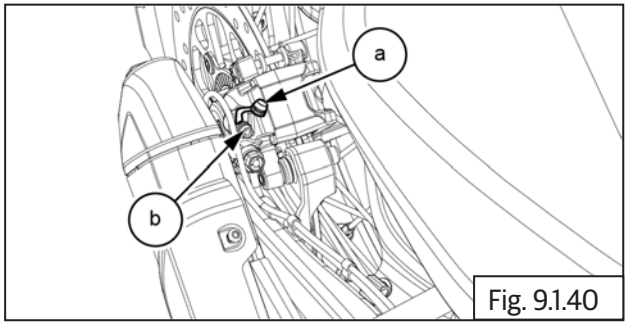

Fig. 9.1.40

9.8.5. Rear Brake Fluid Leakage

⚠ CAUTION

Ensure the motorcycle is upright on a firm and flat surface.

NOTE

- *Inspect fluid level at every 5000Km Replace fluid after 20000Km .*

- Inspect fluid level visible on rear reservoir tank.
- Ensure brake fluid level in rear reservoir tank is always between 'MIN' and 'Max' marks **(a)**.

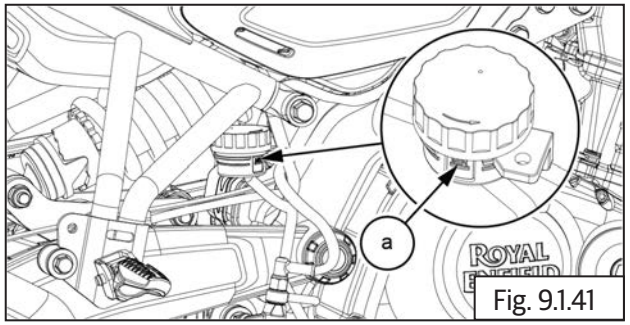

Fig. 9.1.41

- If oil level is below 'MIN', inspect leakage at rear brake hoses and rear master cylinder banjo bolt.

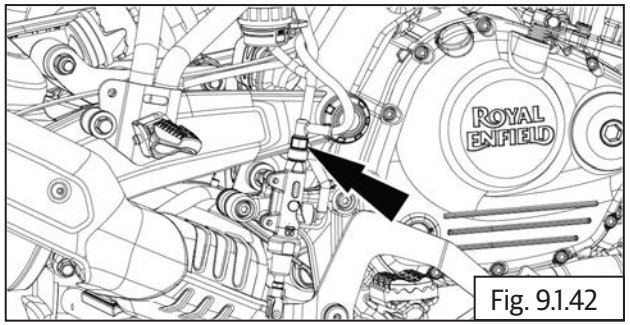

Fig. 9.1.42

- Inspect leakage at rear caliper banjo bolt.

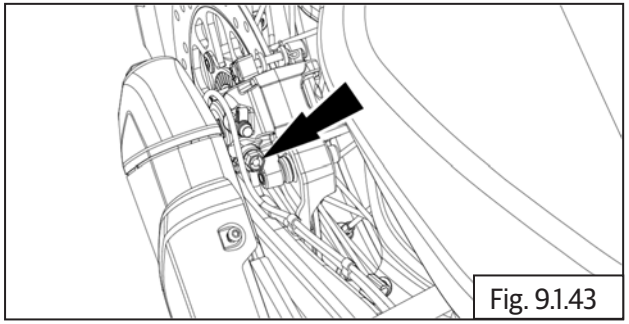

Fig. 9.1.43

- Inspect leakage on brake disc from caliper piston.

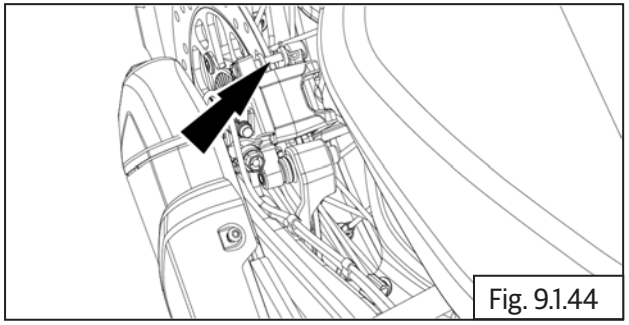

Fig. 9.1.44

- Inspect fluid leakage at hoses on ABS modulator.

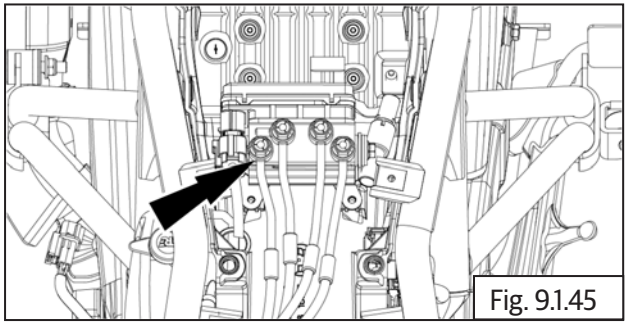

Fig. 9.1.45

9.8.6.Rear Brake Fluid Top Up

- Open rear brake reservoir cap **(a)** from reservoir **(b)**.

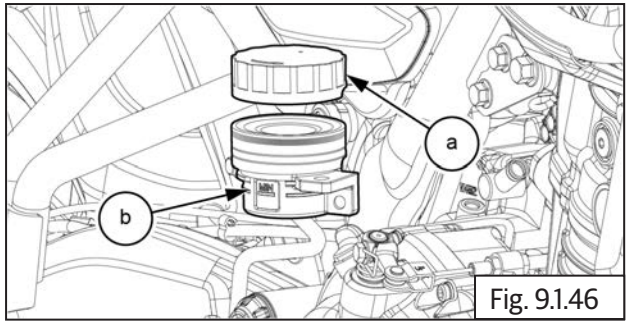

Fig. 9.1.46

- Top up fresh brake fluid **(a)** into reservoir tank **(b)** only up to MAX level. Do not over fill as it may cause malfunctioning of some parts due to brake fluid spillage.

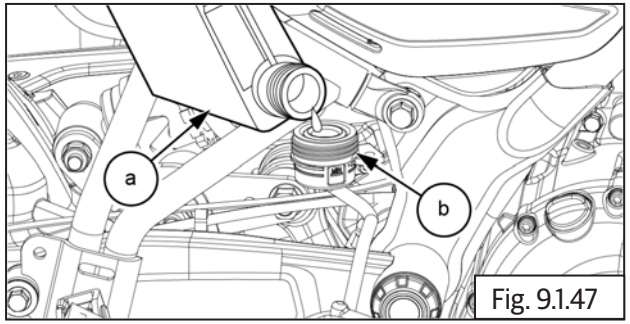

Fig. 9.1.47

- Locate the reservoir cap **(a)** on the tank and ensure it is seated properly.

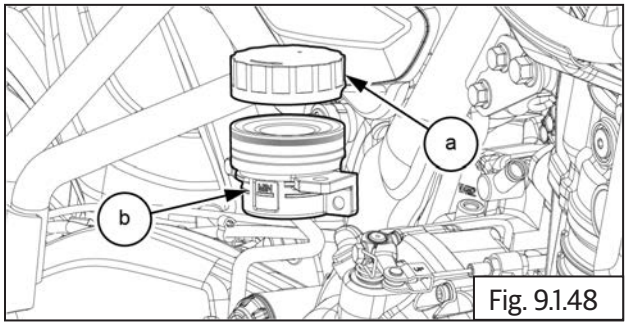

Fig. 9.1.48

10. ENGINE MANAGEMENT SYSTEM (EMS)

CONTENTS PAGE

10 Engine Management System (EMS).....605

System Layout.....605

EMS Components.....605

Functional Diagram.....606

Functional Specifications.....606

1. Electronic Control Unit (ECU).....606
2. Fuel Injectors.....607
3. Fuel Supply Module.....607
4. Throttle Position Sensor.....607
5. Manifold Absolute Pressure Sensor (MAP).....608
6. Canister Purge Valve.....608
7. HEGO Sensor (HEGO / O2).....609
8. Idle Air Control Valve (IAC).....609
9. Engine Oil Temperature Sensor (EOT).....610
10. Intake Air Temperature Sensor (IAT).....610
11. Clutch Switch.....610
12. Side Stand Switch.....611
13. Gear Position Sensor (GPS).....611
14. Roll Over Sensor.....611
15. Crank Position Sensor (CPS).....612
16. Starter Motor Relay.....612

10.1 Engine Management System (EMS).....613

Dismantling.....613

10.1.1. Engine Control Unit (ECU).....613

10.1.2. Fuel Pump.....614

10.1.3. Throttle Body Assembly 615

10.1.4. Throttle Position sensor (TPS) 616

10.1.5. Fuel Injector.....616

10.1.6. Engine Oil Temperature Sensor (EOT).....617

10.1.7. HEGO (O2) Sensor.....618

10.1.8. Purge Valve.....621

10.1.9. Ignition Coil.....622

10.1.10. Ignition Coil LH and RH from bracket.....623

10.1.11 Crank Position Sensor.....624

10.1.12. Gear Position Sensor.....625

10.1.13. Clutch Switch.....626

10.1.14. Side Stand Switch.....626

10.1.15. Starter Motor Solenoid.....628

Assembly 628

10.1.16. Engine Control Unit (ECU).....628

10.1.17. Fuel Pump 629

10.1.18. Fuel injector.....630

10.1.19. Throttle Body.....632

10.1.20. Throttle Position sensor (TPS).....632

10.1.21. Engine Oil Temperature Sensor (EOT).....633

10.1.22. HEGO (O2) Sensors.....633

10.1.23. Purge Valve.....635

10.1.24. Ignition Coil.....636

10.1.25. Crank Position Sensor.....638

10.1.26. Gear Position Sensor.....639

10.1.27. Clutch Switch.....640

10.1.28. SideStandSwitch.....640

10.1.30. Starter Motor Solenoid.....641

10.1.31. Actuator.....642

10.1.32. EMS P codes .....645.

10. Engine Management System (EMS)

Engine Management System is responsible for controlling the amount of fuel being injected and for adjusting the ignition timing. Optimum functioning of EMS assures maximum engine power with the lowest amount of exhaust emissions and lowest fuel consumption.

EMS Components

- Electronic Control Unit (Integrated with Throttle Body)
- Fuel Injector
- Fuel Supply Module
- Throttle Position Senor (In-built within ECU)
- Manifold Pressure Sensor (In-built within ECU)
- Canister Purge Valve
- HEGO (O2) Sensor
- Idle Air Control Valve (In-built within ECU)
- Engine Oil Temperature Sensor
- Intake Air Temperature Sensor (In-built within ECU)
- Clutch Switch
- Side Stand Switch
- Gear Position Sensor
- Roll Over Sensor (In-built within ECU)
- Crank Position Sensor
- Starter Motor Relay

Functional Specifications

1. Electronic Control Unit (ECU)

Electronic Control Unit is any embedded system that controls one or more electrical system or subsystems in a vehicle.

Engine Control Unit is a type of Electronic Control Unit that controls a series of actuators on an internal combustion engine to ensure optimal engine performance. It does this by reading values from a multitude of sensors within the engine bay, interpreting the data using multidimensional performance maps (called lookup tables), and adjusting the engine actuators accordingly.

Here ECU consists of a printed circuit board (PCB) assembly contained the plastic housing. The PCB assembly is electrically connected to the following hardware within the throttle body: air intake temperature sensor, air pressure sensor, throttle position sensor and idle flow actuator.

Key Elements:

1.Micro Controller

2.Memory

3.Inputs

4.Outputs

5.Communication Links

6. Throttle Body and In-built Sensors

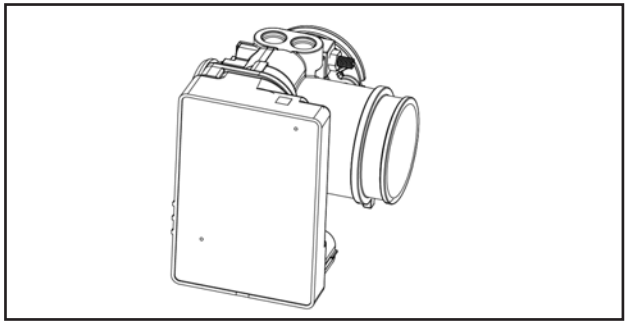

Specification:

Operating Voltage: 8 to 16 V

Operating temperature: -20°C to 85°C

2. Fuel Injector

Fuel injector that use pintle valves are operated by electromagnetic components called solenoids. The solenoid is activated, or “pulses” by an ECU which causes it to undergo linear movement.
Since the solenoid is mechanically connected to a pintle valve within the fuel injector, the linear movement causes the pintle to move away from its seat. A small amount of highly pressurized fuel then sprays from the pintle nozzle.

Specification:

Resistance: 12Ω ± 0.6Ω at 22 ± 3°C

Operating Voltage : 6 to 16 V

Operating Pressure: 200-600 kPa

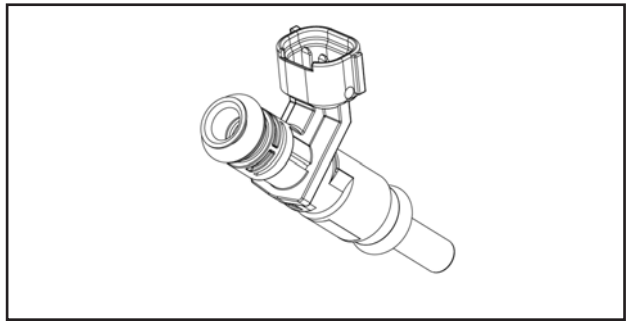

3. Fuel Supply Module

The inlet filter filters the minute dust particles and supplies fuel to the feed pump. The feed pump creates positive pressure in the fuel lines, pushing the gasoline to the injector. The benefit of placing the pump inside the tank is that it is less likely to start a fire. Though electrical components (such as a fuel pump) can spark and ignite fuel vapours, liquid fuel will not explode and therefore submerging the pump in the tank is one of the safest places to mount. The pressure regulator maintains a constant pressure of 350 kpa by returning the surplus fuel back into the tank.

Specification:

Operating Voltage: 8 to 16 V

Operating Fuel Pressure: 350 ± 2 kPa

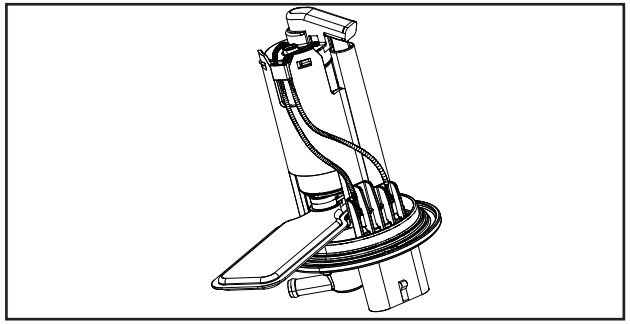

4. Throttle Position Sensor

A Throttle Position Sensor (Tps) is used to monitor the position of the throttle operation and is located on the butterfly spindle so that it can directly monitor the position of the throttle. The sensor is a potentiometer type and therefore provides a variable resistance depending upon the position of the butterfly valve and hence throttle position can be sensed by the ECU. The sensor signal is used by the ECU as an input to its control system. The ignition timing and fuel injection timing (and potentially other parameters) are altered depending upon the position of the throttle, and also depending on the rate of change of the position.

The ECU uses the throttle valve position to know:

- Engine mode: Idle, Part Throttle, Wide-Open Throttle.
- Air-fuel ratio correction.
- Acceleration/ Deceleration correction.

5. Manifold Absolute Pressure Sensor (MAP)

The Manifold Absolute Pressure sensor provides instantaneous manifold pressure information to the ECU. This is necessary to calculate air density to determine the required fuel metering for optimum combustion and influence the advance or retard of ignition timing. This sensor is in built in the ECU.

6. Canister Purge Valve

The purge valve is the part of the vehicle Evaporative Emission Control (EVAP) system. The EVAP system prevents fuel vapors in the fuel tank from escaping into the atmosphere. The EVAP system traps fuel vapors from the fuel tank and temporarily stores them in the charcoal canister, see the diagram. When the engine is running under certain conditions, the fuel vapors are purged from the canister and burned inside the engine. The purge valve precisely controls the amount of fuel vapor that is purged from the charcoal canister. It opens only when engine oil >75º c and HEGO sensor "Controller ON".

Specification:

Valve: Normally Closed

Resistance: 16 $\pm$ 2Ω @ 23 $\pm$ 5°C

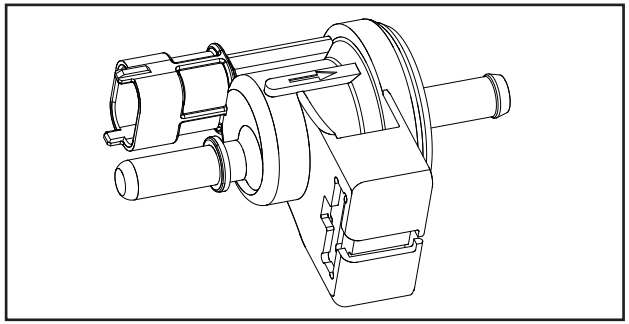

7. HEGO Sensor (HEGO / O2)

The Heated Exhaust Gas Oxygen sensor detects the presence of oxygen in the exhaust and produces a variable voltage according to the amount of oxygen detected. The O2 sensor provides feedback to the ECU indicating air/fuel ratio in order to achieve a near stoichiometric air/fuel ratio of 14.7 : 1 during closed loop engine operation. The ideal mixture is the amount of fuel needed to make an engine perform as commanded by the ECU.

The HEGO sensor is a voltage generator which is installed upstream from the catalytic converter. The heated exhaust gas oxygen sensor will generate a voltage signal that is characteristic of this ideal stoichiometric ratio. The HEGO sensor operates as a reference-gas sensor, and compares the residual oxygen in the exhaust gas with the oxygen in the reference atmosphere (air circulating inside the sensor). The active sensor ceramic is heated by the internal heating element; thus sensor heating reduces the influence of the exhaust gas temperature on the sensor-ceramic temperature and therefore the temperature-dependent sensor. Reliable signals working temperature from 300ºc to 900ºc maximum.

Specification:

Operating Voltage: 16 V (Max)

Operating temperature: 600ºC to 950ºC

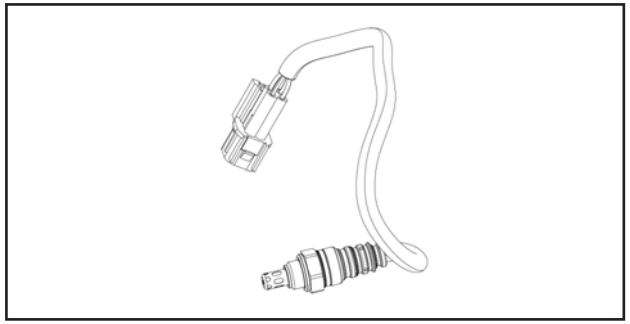

8. Idle Air Control Valve (IAC)

Idle Air Control Valve is basically a stepper motor controlling the bypass air to the engine and helps to idle and cold start the engine without difficulties. The ECU accordingly collects the data from the engine oil temperature and intake air temperature sensors and operates the stepper motor in regulating the engine RPM. This allows the engine's idle speed to be maintained constant. Idle Air Control Valve is in built in the ECU.

9. Coolant Temperature Sensor

Engine oil temperature sensor is thermistor whose resistance is dependent on temperature. It has a Negative Temperature Coefficient where the resistance decreases with increase in temperature. It gives the average temperature of the engine oil to the ECU for making corrections in the injection quantity, ignition timing and for adjusting the stepper opening for better idle stability. It is mounted in LH of cylinder head.

Specification:

Operating Temperature: -55 to 250°C

Supply Voltage: 5 V

Pin Out Voltage: 3.79 V @ 40°C (Across Pins 19 & 22)

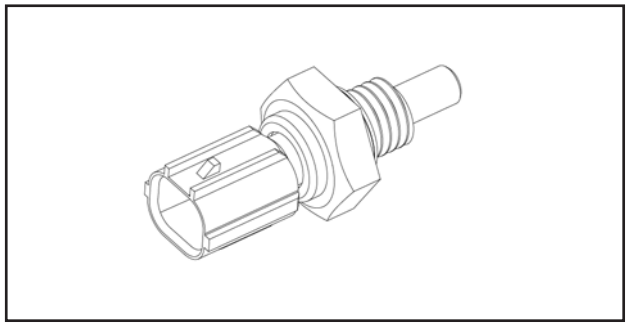

10. Intake Air Temperature Sensor (IAT)

Intake air temperature sensor is also a Negative Temperature Coefficient sensor where the resistance decreases with increase in temperature. It gives the information about ambient air temperature to the ECU for making corrections in the injection quantity and ignition timing. This intake air temperature sensor is in-built in ECU.

NOTE: 1. To meet target emission

2. To meet evaporative emission.

11. Clutch Switch

Clutch switch gives information to the ECU about the clutch status (i.e) engaged or disengaged with the gearbox.

The clutch switch gives digital input to the ECU (i.e) 0 or 1 which will help in starting of the vehicle when the engine is not in neutral gear. It is mounted under the LH switch module at handle bar.

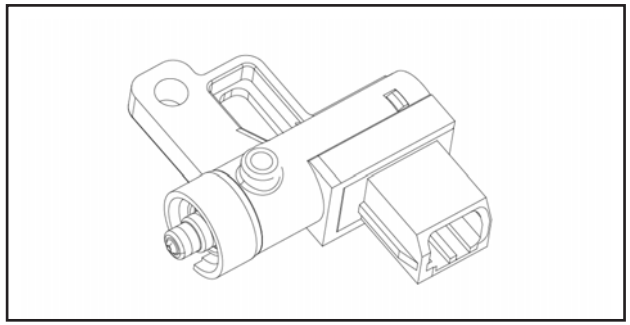

12. Side Stand Switch

Side stand switch prevents the vehicle from starting when the side stand is down and not in neutral gear. It is HALL - IC type switch, which is directly connected to ECU.

Specification:

(Across Pins 226 & 208)

Side stand down: 2.80 to 4.05 V

Side stand up: 0.35 to 1.15 V

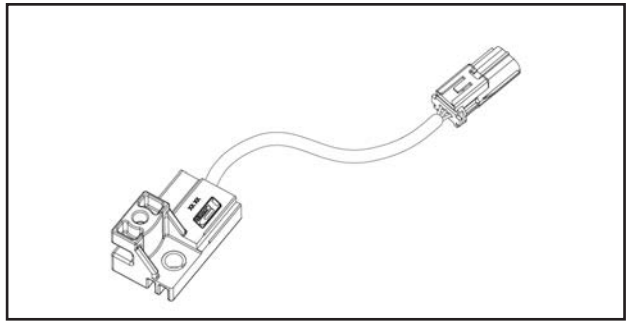

13. Gear Position Sensor (GPS)

Gear Position Sensor indicates the ECU, the gear in which the vehicle is operated at that instant. The input is also required for drive ability calculations in the ECU.

During neutral gear position a light will glow in instrument cluster.

Operating temperature: -25°c to +150°c

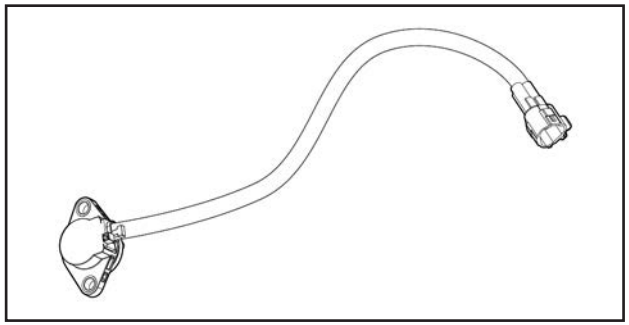

Specification:

(Across Pins 123 & 208)

Neutral gear: 0.37 to 1.16 V

14. Roll Over Sensor

Roll over sensor is also known as bank angle sensor. This sensor gives signal to the ECU if the vehicle rolls off during any mishap or accident. The ECU then cuts off the supply to the fuel injector and the spark plug thus stalling the vehicle, due to which further major mishap is avoided. This sensor is In-built in the ECU.

Specification:

Banking angle: 50 degrees

15. Crank Position Sensor (CPS)

It provides an alternating electrical pulse to the ECU, to determine crankshaft speed and TDC position of the piston in compression stroke. This input will help the ECU to optimize both fuel injection as well as Ignition advance required to suit the crankshaft rotation speed (RPM).

In the event throttle is wide open, leading to crankshaft speed above 5500 RPM, the high frequency electrical pulses from the crank position sensor will prompt the ECU to restrict fuel supply so that the crank speed reduces to safe levels. This is a safety aspect to prevent damage to moving engine parts. CPS is located inside the engine cover LH, under the stator coil.

Specification:

Output Voltage: 3 - 5 V AC

Resistance : 215Ω ± 10Ω

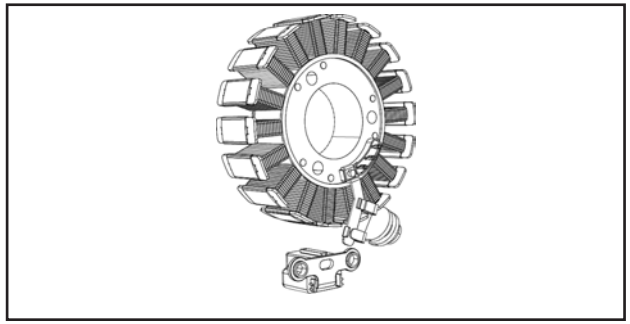

16. Starter Motor Relay

The starter motor is activated by a solenoid, whenever the starter button is depressed to start the engine.

While cranking, when the crank speed attains 600 RPM the ECU commands the starter solenoid to disconnect the power supply to the starter motor so that is will stop spinning.

Also in case the engine does not start within 15 seconds of depressing the starter button, the solenoid will disconnect power supply to the starter motor and will reset to normal condition only after the starter switch is released and after a time delay of about 5 seconds and Crank is at Zero RPM

This is a safety feature to safeguard the starter motor, solenoid and the starter clutch.

Specification:

Operating Voltage: 8 to 16 V

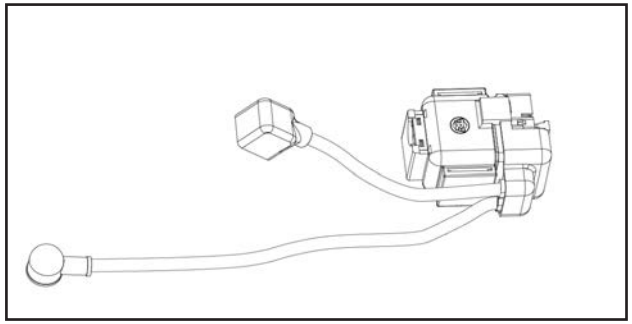

10.1 Engine Management System (EMS)

Dismantling

10.1.1 Engine Control Unit (ECU)

⚠ CAUTION

Before disconnecting ECU from the wiring harness, the battery terminals must be disconnected from the battery.

- Ensure the ignition switch and stop switch are in OFF position.
- Remove the Seat assembly.
- Remove the Fuel tank.
- Disconnect battery terminals.
- Disconnect hose **(a)** from throttle body.

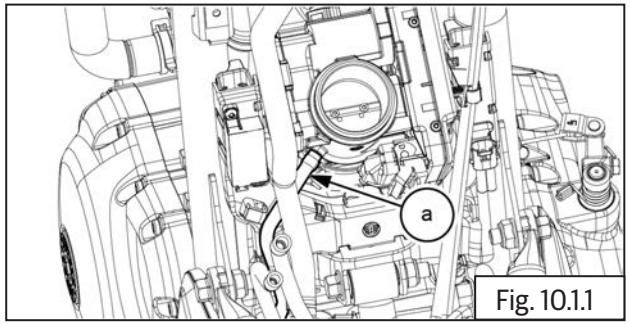

Fig. 10.1.1

- Disconnect coupler from ECU.

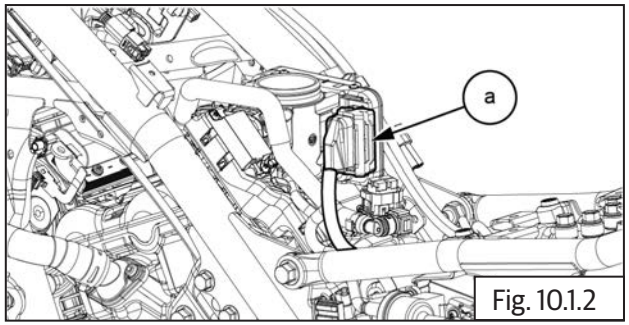

Fig. 10.1.2

- Loosen worm clip screws **(M5) (a)** to a disconnect EMS throttle body **(b)** from transition piece.

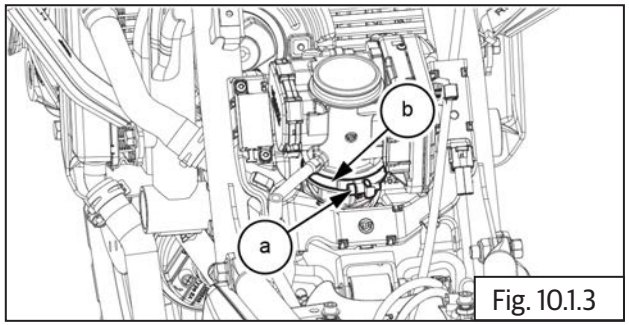

Fig. 10.1.3

	4 mm Allen socket with ratchet

- Remove EMS throttle body **(a)** from transition piece.

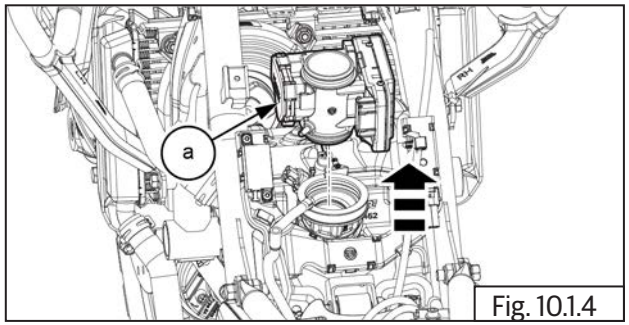

Fig. 10.1.4

⚠ CAUTION

Ensure locks are fully lifted up and released before disconnecting wiring connectors from ECU.

Ensure locks are handled with care and do not get damaged or broken.

Damaged or broken locks will result in loose connections and cause the ECU to fail.

Storage of ECU

Do's & Don'ts

- Store ECU away from any magnetic forces at it will affect the ECU program software and damage ECU.
- Store ECU in a cool and dry place.
- DO NOT allow moisture to affect the ECU.
- DO NOT wash the ECU with water or any solvent.
- Prevent ECU from any external damages.
- DO NOT drop ECU or allow it to fall as internals will get damaged and render the ECU defective.
- DO NOT keep any heavy or sharp objects on ECU as it will damage internals and render the ECU defective.

10.1.2 Fuel Injector

- Disconnect coupler from injector assembly **(a)**.

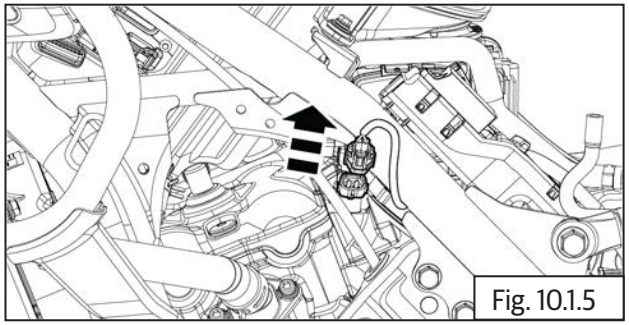

Fig. 10.1.5

- Remove fuel hose **(a)** from injector cap.

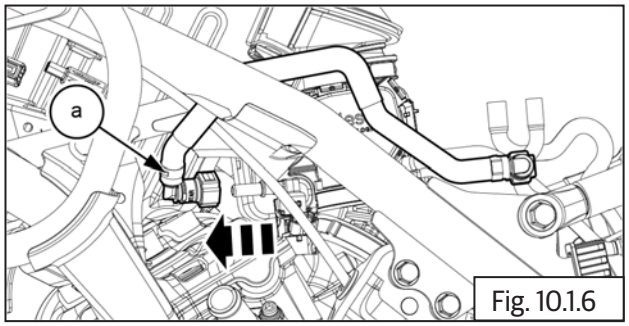

Fig. 10.1.6

- Remove **1 No (M6)** injector mounting bolt **(a)**.

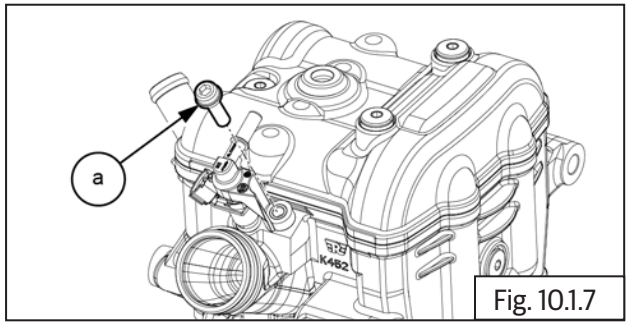

Fig. 10.1.7

	5 mm allen key with Ratchet

- Gently pull out the injector assembly **(a)**.

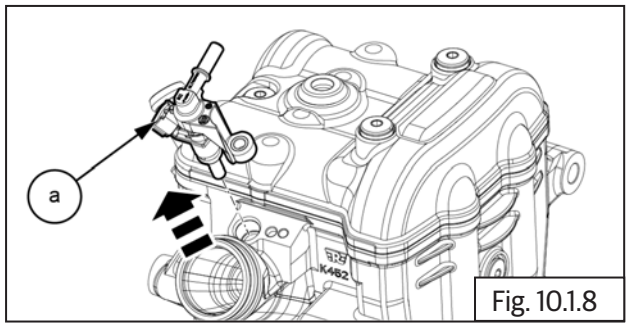

Fig. 10.1.8

⚠ CAUTION

- **Store the injector in a clean and dry place. Make sure that the injector is not damaged.**
- **Place the injector in a plastic bag to avoid dust entry.**

10.1.3 Fuel Pump

- Ensure Ignition switch and Engine stop switch are in OFF position.
- Remove the Rider seat.
- Remove the Fuel tank assembly.

⚠ CAUTION

- **Ensure the following:**
- **Fuel is drained completely from fuel tank.**
- **Fuel feed and return hoses are disconnected from the fuel rail.**
- **Wiring couplers to fuel pump and low fuel sensor are disconnected.**
- **EVAP hose pipes are disconnected.**

⚠ WARNING

Gasoline is extremely flammable and highly explosive. Improper handling can lead to fatal accident or serious injury.

- Invert fuel tank to access fuel pump and fuel float.

⚠ CAUTION

- **Ensure the tank top/side surfaces DO NOT get damaged or scratched while removing fuel pump/float. Provide adequate protection to fuel tank.**

- Loosen and remove 5 Nos. Hex flange head bolts **(M5) (a)** from fuel pump.

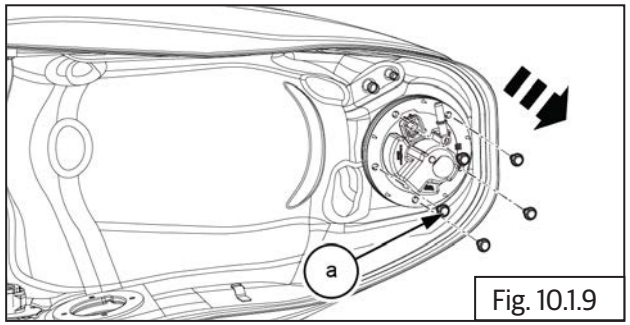

Fig. 10.1.9

	8 mm Socket with Ratchet

- Remove lock plate **(a)** from fuel pump.

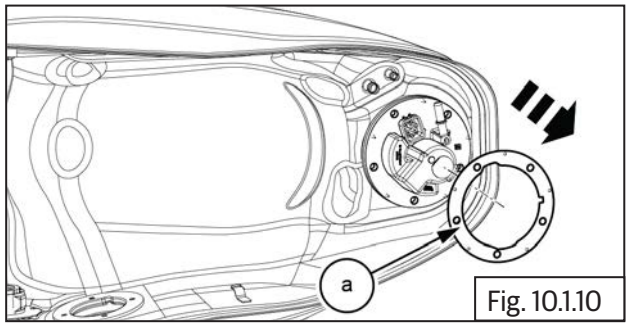

Fig. 10.1.10

- Gently pull out the fuel pump **(a)** from fuel tank.

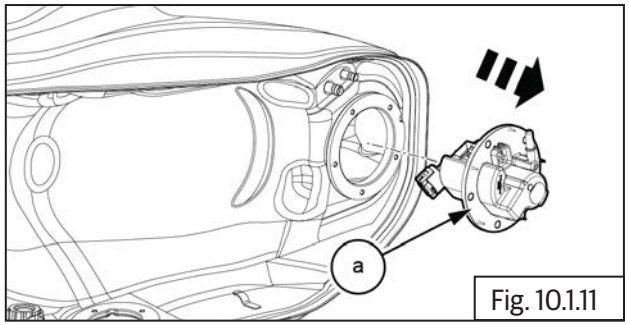

Fig. 10.1.11

- Remove seal **(a)** from fuel pump.

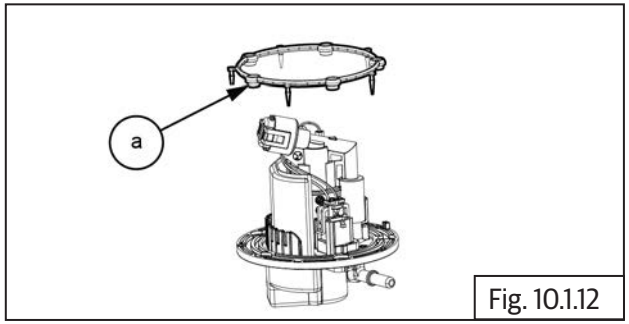

Fig. 10.1.12

7.1.4. Strainer

- Ensure clean work area prior to the replacement process.
- To ensure there is no damage to the wiring harness during the strainer serviceability we suggest to remove the wiring harness connector.
- Pull the snap window outwards first and then lift the electrical connector **(a)** upwards remove.
- Then without damaging/deforming locks provided in the connector take out the connector **(a)** carefully.

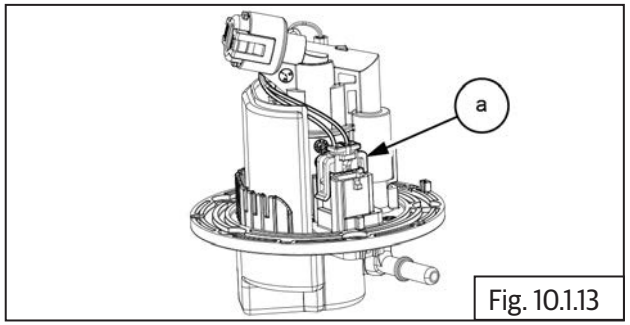

Fig. 10.1.13

10.1.3. Throttle Body Assembly

- Ensure ignition switch and engine stop switch are in OFF position
- Remove the following parts:
  - Side panel RH.
  - Rider seat.
  - Side panel LH.
  - Fuel tank assembly.

⚠ CAUTION

Ensure the following:

Fuel is drained completely from fuel tank.

Fuel hoses are disconnected.

Wiring couplers to fuel pump and low fuel sensor are disconnected.

EVAP hose pipes are disconnected.

⚠ WARNING

Gasoline is extremely flammable and highly explosive. Improper handling can lead to fatal accident or serious injury.

- Remove the following parts:
  - Throttle cable.
  - Remove electrical connector **(a)** from ECU.

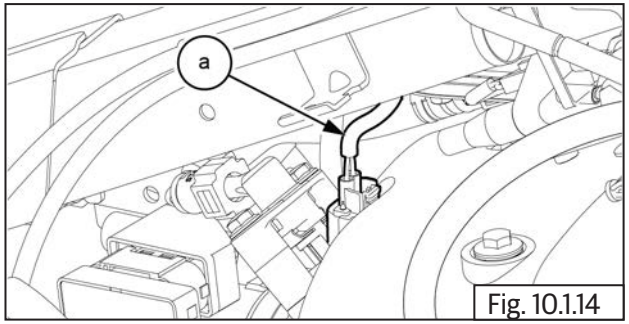

Fig. 10.1.14

  - Rubber hoses connecting to Throttle body from EVAP.
- Ensure vacuum hose is removed.
- Loosen wire clips on air filter connection tubes.
- Loosen worm clip screw on inlet manifold.

NOTE

- *Ensure screw is sufficiently loosened and the worm clip rotates easily in the groove in the manifold.*

- Gently pull out throttle body from the inlet manifold rubbers along with fuel rail and injectors.

10.1.4. Coolant Temperature Sensor

- Coolant temperature sensor located on rear side of cylinder head.
- Remove coolant temperature sensor coupler **(a)**.

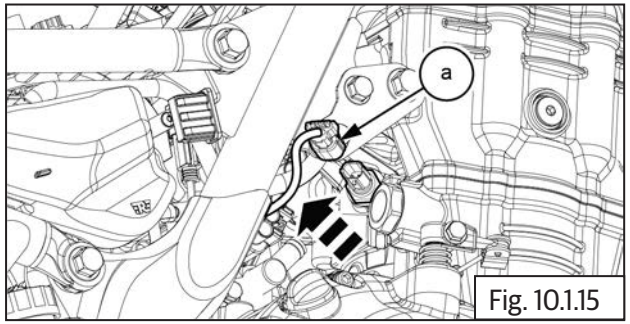

Fig. 10.1.15

- Remove coolant temperature sensor **(a)**.

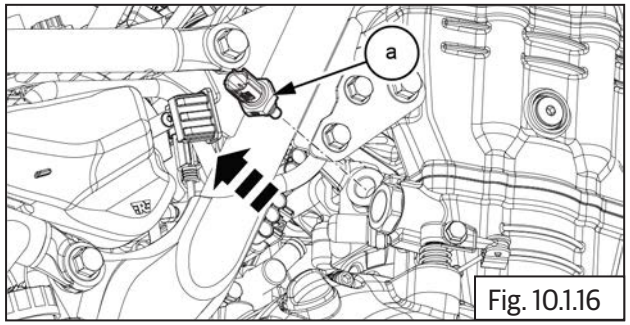

Fig. 10.1.16

	18mm Long Socket With Ratchet

10.1.5. Engine Oil Pressure Switch

NOTE

- *Ensure the engine is cold before dismantling EOT.*
- *Ensure Ignition switch and Engine stop switch are in OFF position.*

⚠ CAUTION

Do not remove EOT from cylinder head when the engine is hot.

- Disconnect the oil pressure switch coupler **(a).**

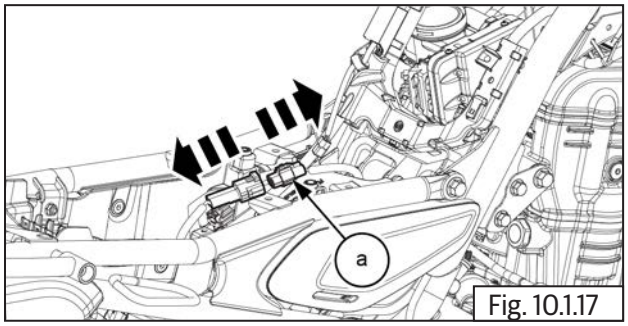

Fig. 10.1.17

- Place a small tray under EOT to collect the oil when it is loosened and removed.
- Insert EOT wiring coupler through a deep grooved ring spanner and locate the spanner on the EOT hex head correctly.
- Loosen and remove the Oil pressure switch **(a)** along with washer **(b)**.

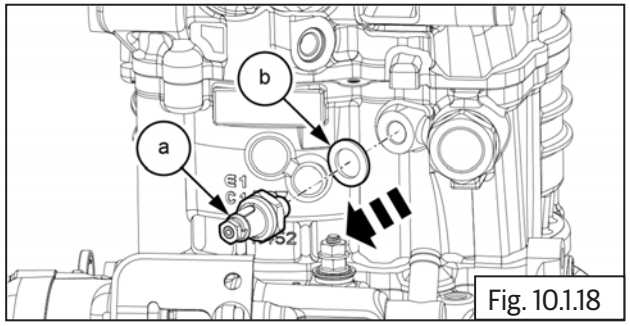

Fig. 10.1.18

	21 mm Long Socket with Ratchet

10.1.6. HEGO (O2) Sensor

⚠ CAUTION

Do not loosen/remove HEGO (O2) sensors when the exhaust pipes are hot.

⚠ WARNING

The engine and exhaust systems get extremely hot during normal operation and can result in serious burns if touched. Make sure exhaust pipes are not hot and is at the same levels of ambient/surrounding temperature whenever working on the engine or exhaust systems.

Prior Removal:

- Remove the fuel tank.
- Remove the air filter box.
- The HEGO (O2) sensor **(a)** are located on the exhaust pipes **(b)** near the cylinder head RH.
- Detach the 1 Nos omega clips **(a)** from Oxygen Sensor wiring harness.

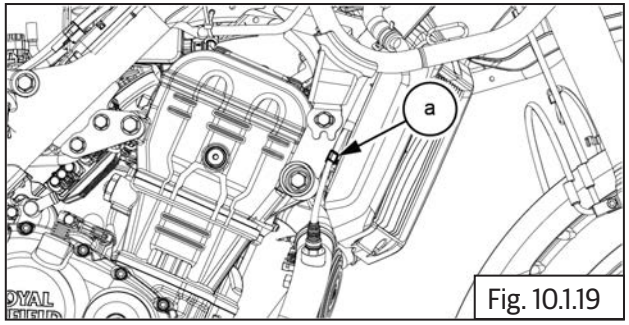

Fig. 10.1.19

	Screw driver

- Oxygen sensor coupler located on RHS chassis frame.
- Disconnect oxygen sensor connector**.**

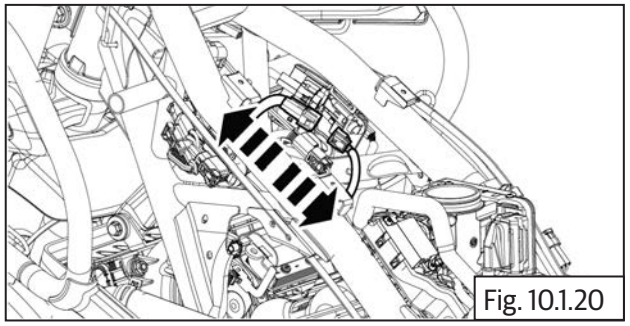
Fig. 10.1.20

- Gently loosen and remove the Oxygen sensor **(a)** from the exhaust pipe.

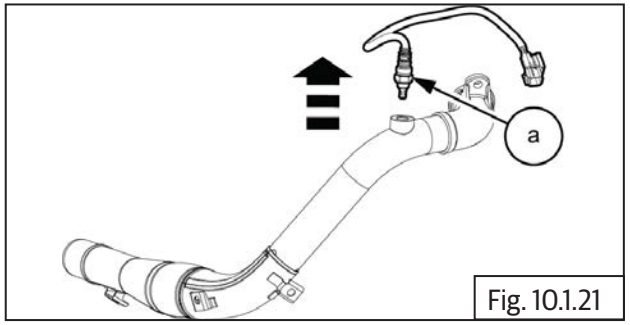

Fig. 10.1.21

	17 mm Double end spanner/Deep groove spanner

10.1.8. Purge Valve

Prior Removal:

- Ensure ignition key and engine stop switch are in OFF position.
- Disconnect battery negative (-) terminal.
- Before removing any part of the EVAP system, open fuel tank cap to release the pressure inside.
- Remove the rider and pillion seats.
- Remove the fuel tank.
- Remove the LHS side panel.
- Disconnect electrical coupler **(a)** from purge valve.

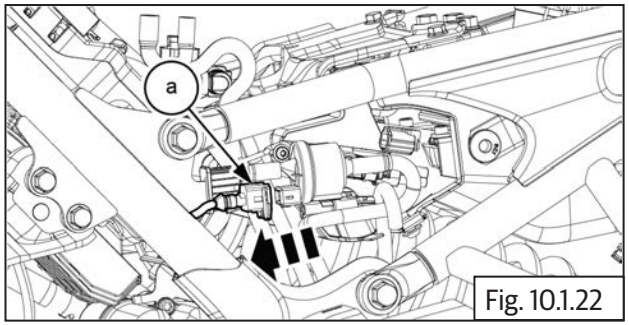

Fig. 10.1.22

- Disconnect hose **(a)** from throttle body.

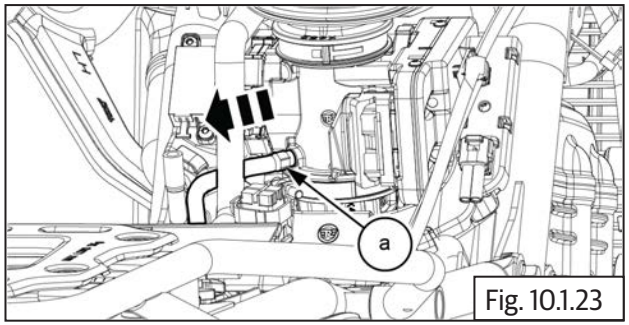

Fig. 10.1.23

- Slide and remove the purge valve with rubber boot **(a)** from bracket.

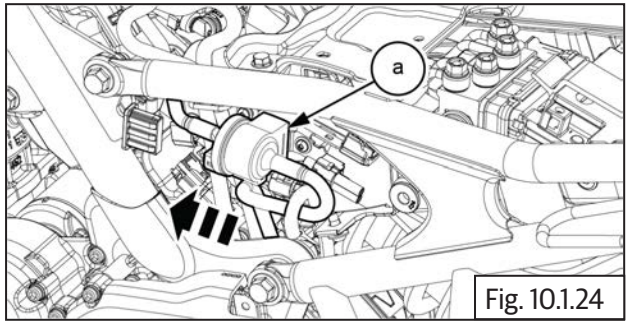

Fig. 10.1.24

- Disconnect input hose **(a)** from purge valve.

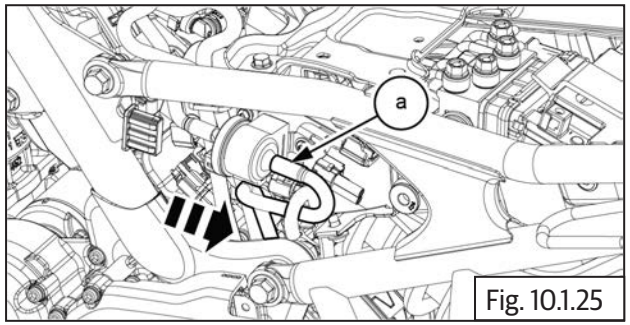

Fig. 10.1.25

- Remove the purge valve with hose assembly **(a)**.

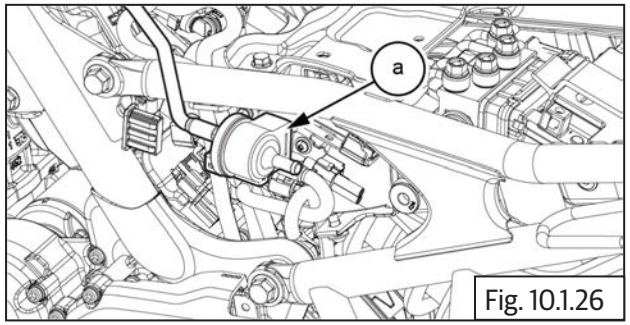

Fig. 10.1.26

10.1.9. Ignition Coil

- Ensure Ignition switch and Engine stop switch are in "OFF" position.
- Remove the Fuel Tank.
- Remove the air Filter Assembly.

⚠ CAUTION

- **Ensure the following:**
- **Fuel is drained completely from fuel tank.**
- **Fuel feed and return hoses are disconnected from the fuel rail.**
- **Wiring couplers to fuel pump and low fuel sensor are disconnected.**

⚠ WARNING

Gasoline is extremely flammable and highly explosive. Improper handling can lead to fatal accident or serious injury.

- The Ignition coil is located on the bottom of the air filter.
- Remove spark plug cap **(a)** from engine.

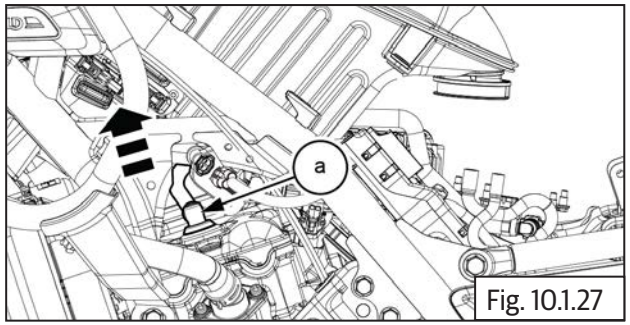

Fig. 10.1.27

- Disconnect the **2 Nos** ignition coil couplers **(a)**.

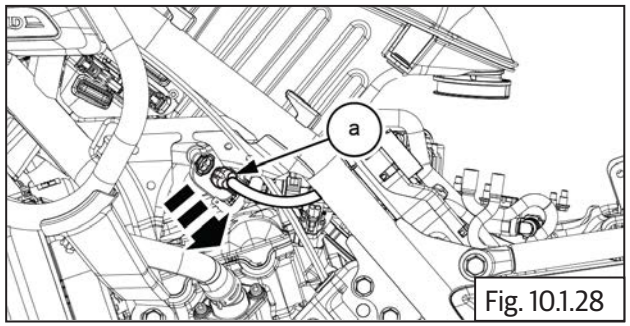

Fig. 10.1.28

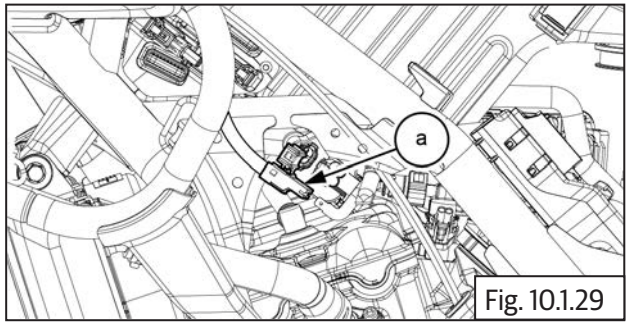

Fig. 10.1.29

- Remove **2 Nos** cap head screws **(M6)** from ignition coil **(a)**.
- Remove ignition coil **(a)** with high tension cable from air filter box **(b)**.

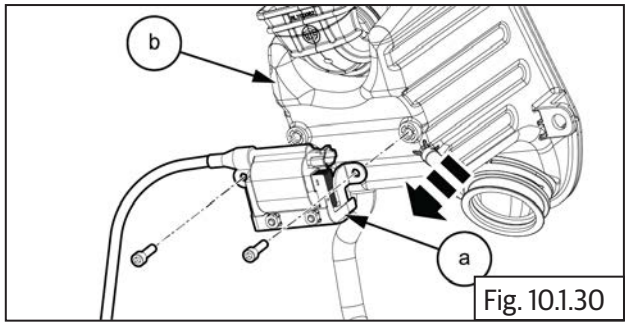

Fig. 10.1.30

	5mm Allen key

10.1.10 Crank Position Sensor

Prior Removal:

- Remove the Side panel LH.
- Remove the ACG Cover (LH Side).
- The crank position sensor **(a)** is located inside the engine cover LH and attached to the Magneto coil.
- Disconnect crank position sensor coupler **(2)** from LH bottom battery tray.

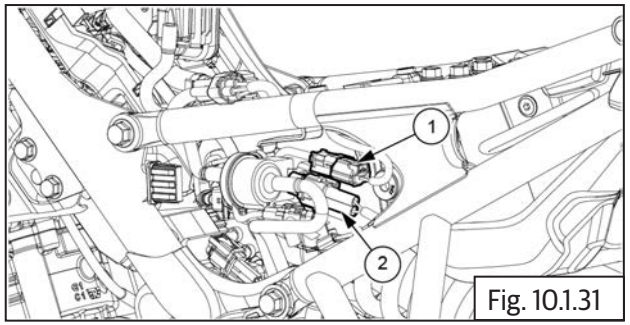

Fig. 10.1.31

- Loosen and remove 2 Nos. cap flange bolts **(M5)** **(a)** from Crank position sensor.

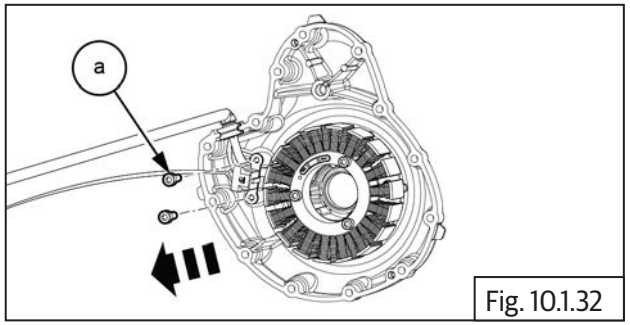

Fig. 10.1.32

	4 mm allen key with Ratchet

- Gently release wiring grommet **(a)** from ACG cover.

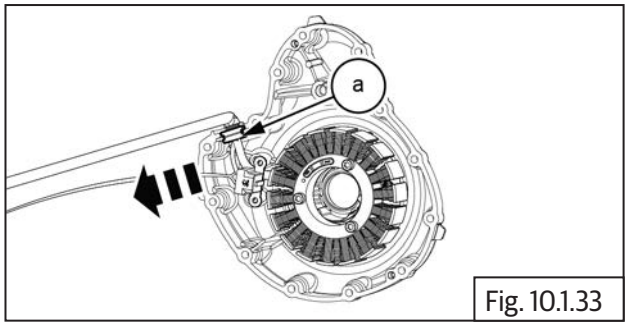

Fig. 10.1.33

- Loosen and remove 3 Nos. cap flange bolts **(M6) (a)** from magneto starter mounting.

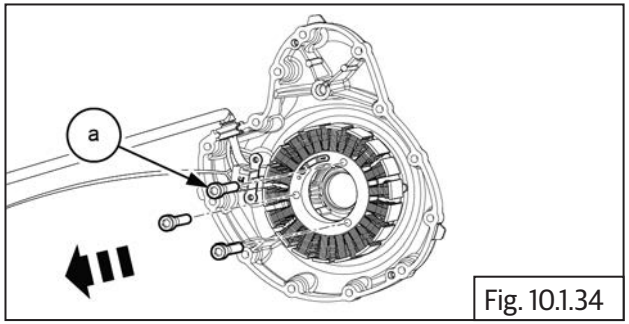

Fig. 10.1.34

	5 mm allen key with Ratchet

- Gently remove the magneto starter **(a)** from LH ACG cover.

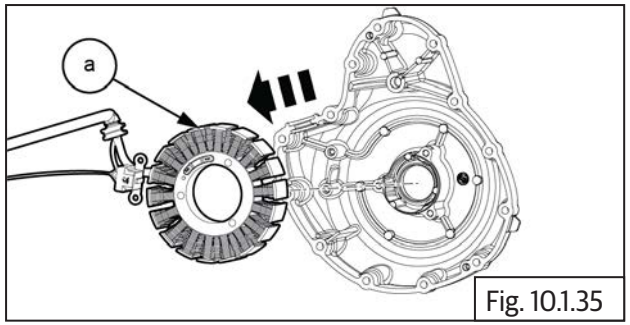

Fig. 10.1.35

10.1.11. Gear Position Sensor

Prior Removal:

- Remove the Side panel LH.
- Remove the FD Sprocket cover.
- The crank position sensor **(a)** is located inside the engine cover LH and attached to the Magneto coil.
- Disconnect gear position sensor coupler **(a)** from LH bottom battery tray.

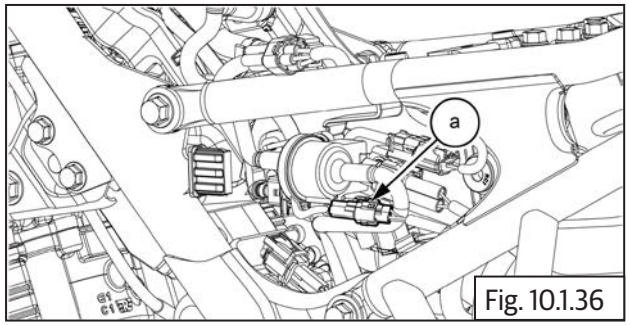

Fig. 10.1.36

- Loosen and remove 2 Nos. cap bolts **(M6) (a)** from gear position sensor cable guide bracket.

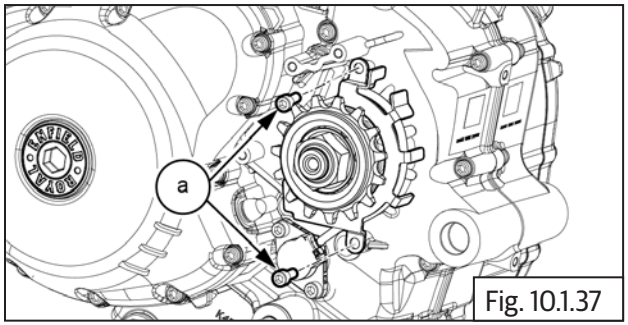

Fig. 10.1.37

	5 mm allen key with Ratchet

- Remove the cable guide bracket **(a)** .

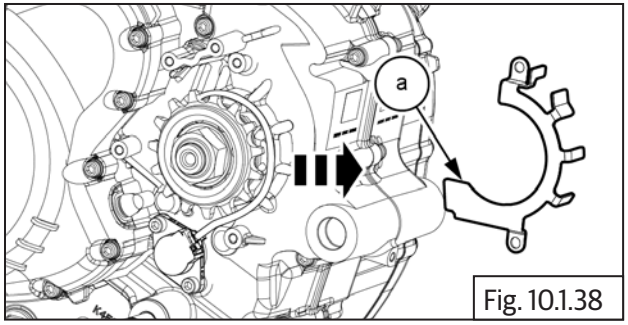

Fig. 10.1.38

- Loosen and remove 2 Nos. Gear position sensor mounting bolts **(M6) (a)**.

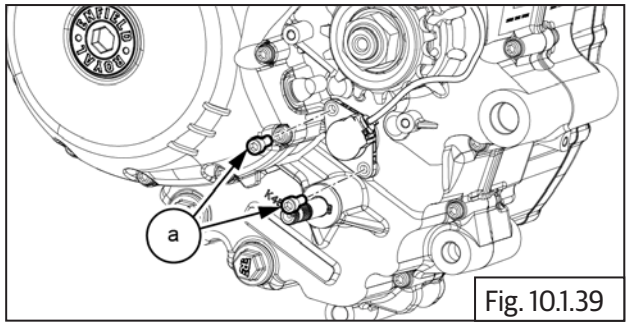

Fig. 10.1.39

	5 mm allen key with Ratchet

- Remove Gear position sensor with "O" ring **(a)** from engine.

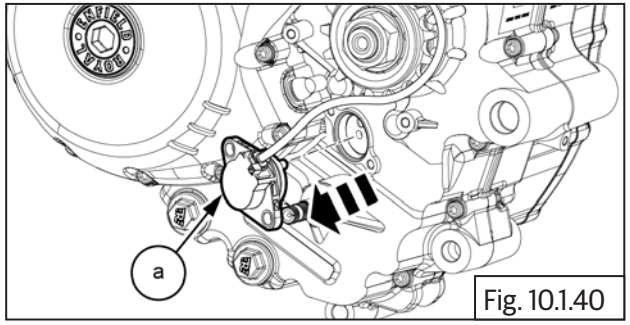

Fig. 10.1.40

10.1.13. Side Stand Switch

⚠ CAUTION

Ensure the motorcycle is upright on a firm and flat surface.

⚠ CAUTION

Be extremely careful when removing and installing the springs as the combined tension of the springs is very strong.
Keep the motorcycle on its side stand when removal and installing the center stand.
The spring removal and installation shall be performed by two people. While one person holds the motorcycle, another person installs the spring.

- Locate a scissor jack under the cradle frame and lift motorcycle such that the front wheel is off the ground by minimum 6 inches (or 15 cm).

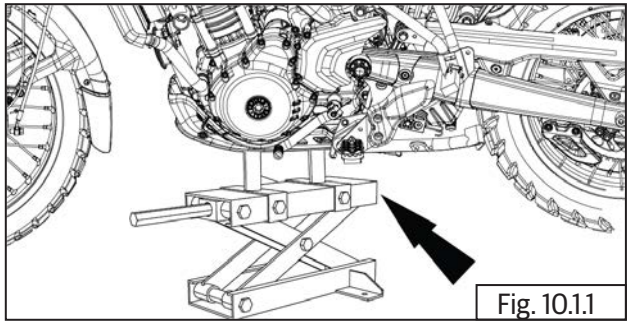
Fig. 10.1.1

- Remove the Side panel LH.
- Disconnect the side stand switch coupler **(a)**.

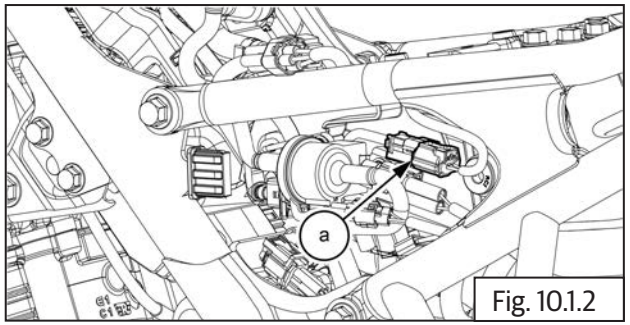

Fig. 10.1.2

- Remove spring (a) from the side stand.

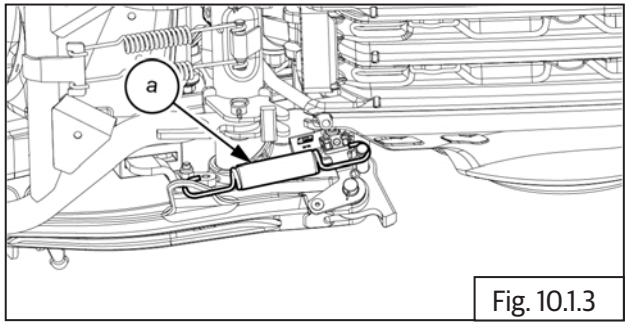

Fig. 10.1.3

	Screw driver

- Remove split pin **(a)** from clevis pin.

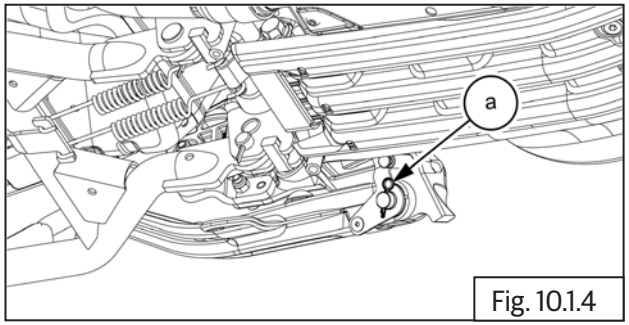

Fig. 10.1.4

	Nose plier

- Remove clevis pin **(a)** from side stand.

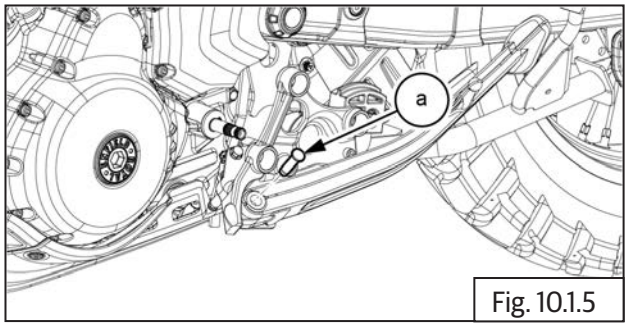

Fig. 10.1.5

- Remove side stand **(a)** from frame.

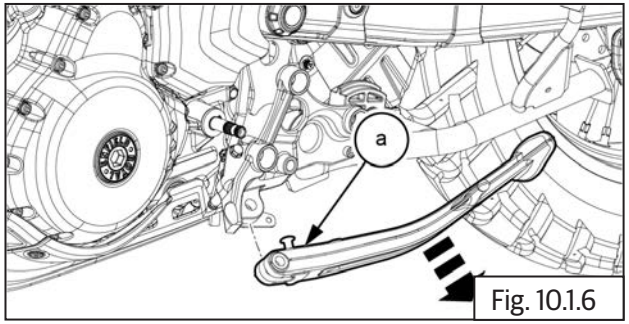

Fig. 10.1.6

- Loosen and remove 1 Nos. hex flange bolt **(M8) (a)** & hex nut **(b)** from spring pin.

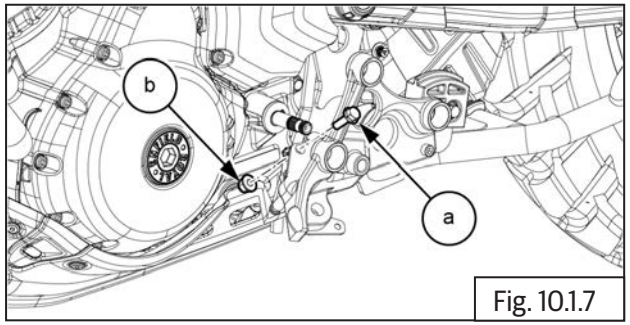

Fig. 10.1.7

	8 mm Socket With Ratchet 10 mm Double End Spanner

- Remove the side stand switch **(a)** from frame .

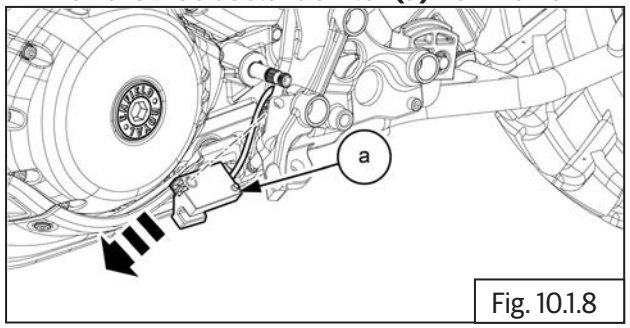

Fig. 10.1.8

10.1.14 Starter relay

- Disconnect the starter relay coupler **(a)**.

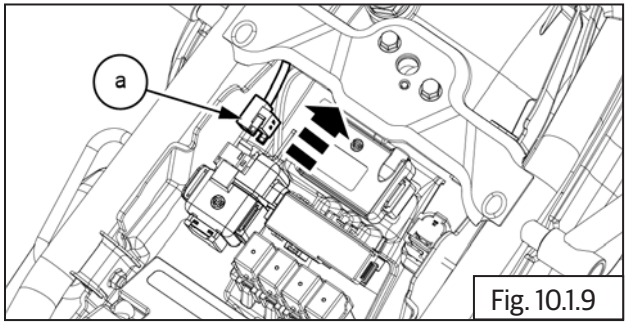

Fig. 10.1.9

- Open the cap **(a)** from the relay.

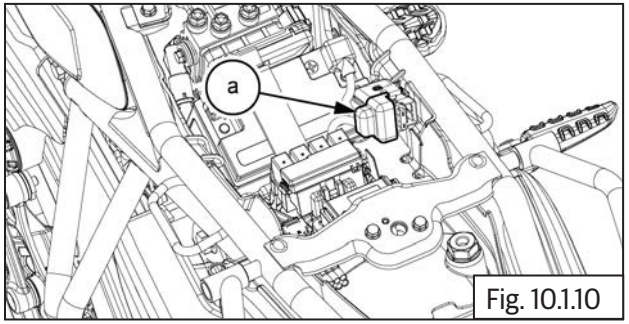

Fig. 10.1.10

- Remove the starter relay **(a)** from the slot.

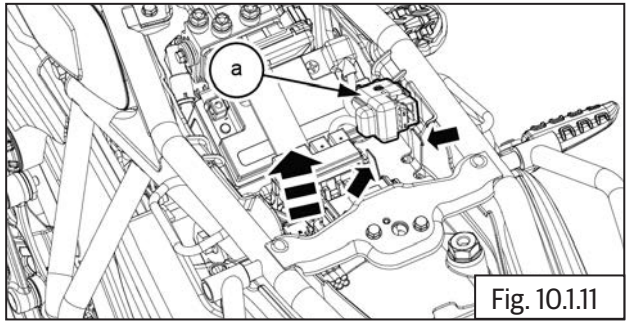

Fig. 10.1.11

- Remove the 2 Nos screws **(a)** from the main cable.

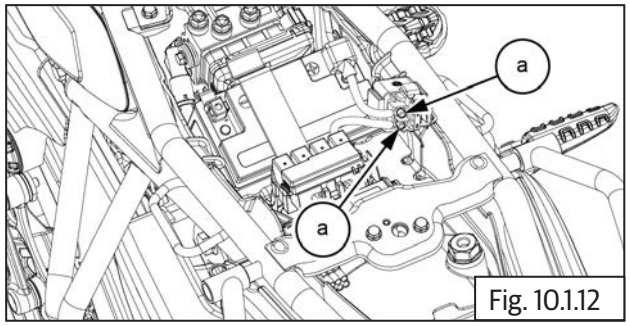

Fig. 10.1.12

	4 mm allen key with rachet

- Remove the battery main cables **(a)** from relay.

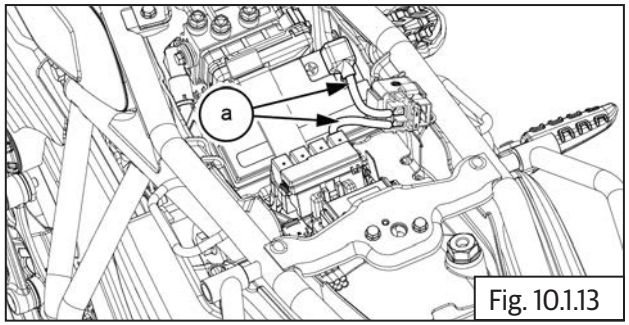

Fig. 10.1.13

- Remove the starter relay **(a)** from battery tray,

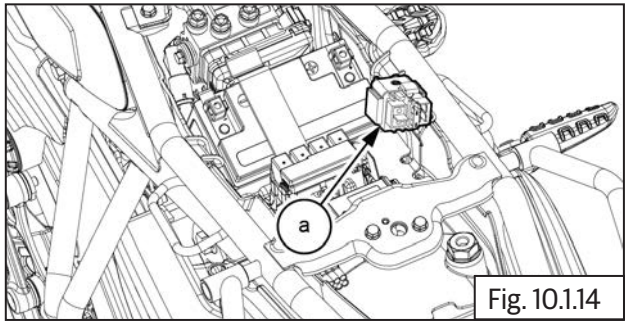

Fig. 10.1.14

- Loosen and remove the nut **(a)** from self motor and remove the main cable.

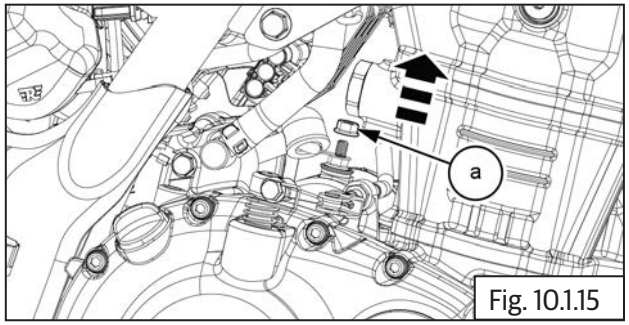

Fig. 10.1.15

	10 mm Socket with Ratchet

10.1.15 Throttle Grip Assembly

- Remove the Seat assembly.
- Remove the Fuel tank.
- Disconnect Accelerator position sensor coupler **(a)**.

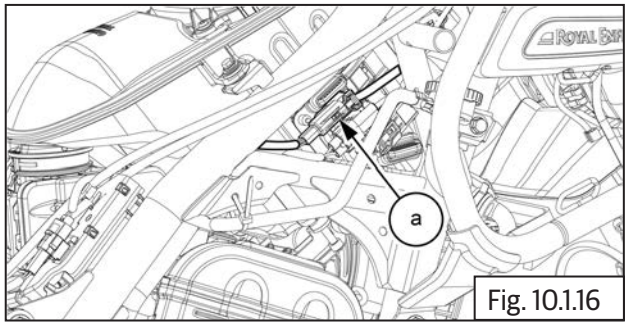

Fig. 10.1.16

- Loosen and remove 2 Nos. philips head screws **(a)** from the RH switch cube along with throttle grip from handle bar.

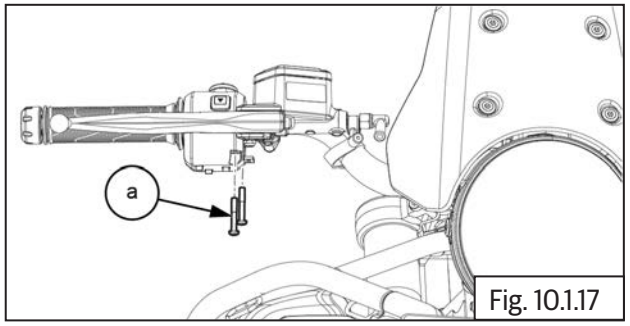

Fig. 10.1.17

	Philips Screw Driver

- Gently separate the upper RH switch cube **(a)** and lower RH switch cube **(b)** & remove RH switch cube along with throttle grip from handle bar.

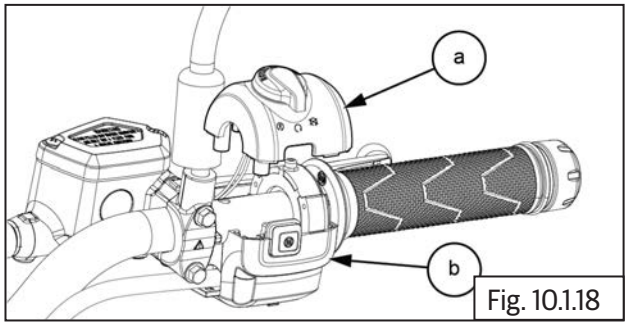

Fig. 10.1.18

- Loosen and remove 1 Nos. philips head screw **(a)** from the wire stopper.

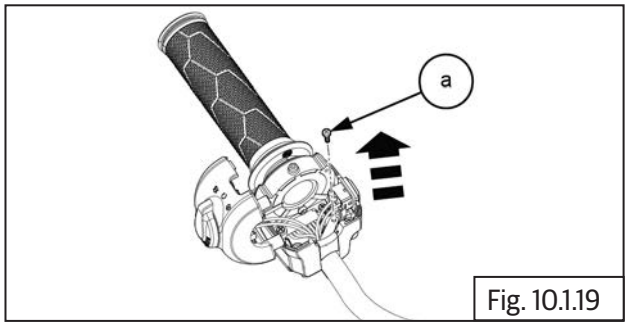

Fig. 10.1.19

	Philips Screw Driver

- Remove wire stopper **(a)** from lower RH switch cube **(b)**.

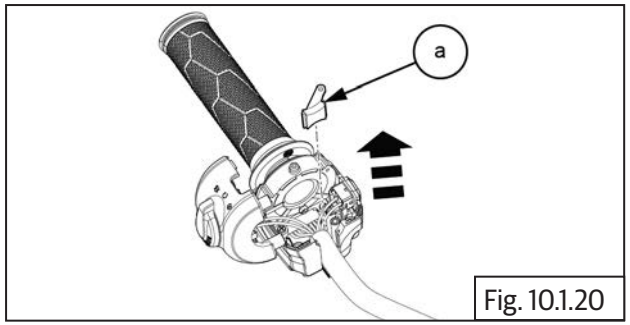

Fig. 10.1.20

- Loosen and remove 2 Nos. philips head screws **(a)** from the mode switch.

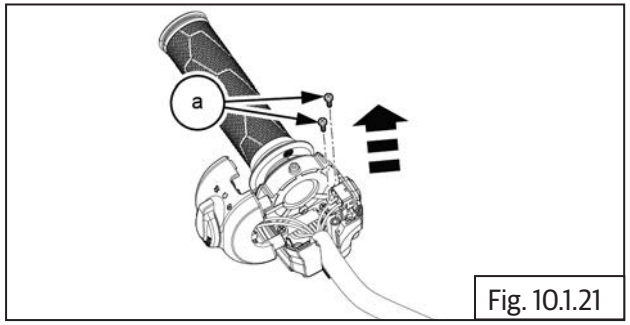

Fig. 10.1.21

	Philips Screw Driver

- Gently separate mode switch **(c)** along with button **(a)** & spring **(b)** from lower RH switch cube.

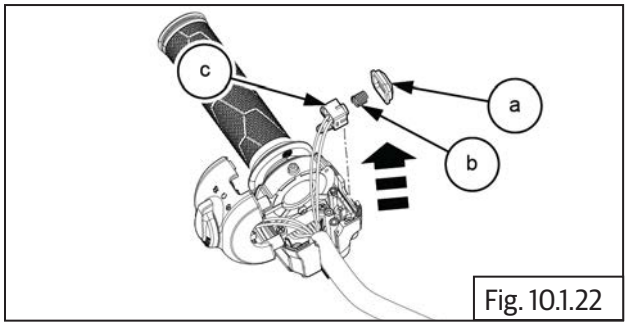

Fig. 10.1.22

- Loosen and remove 2 Nos. philips head screws **(a)** from throttle grip.

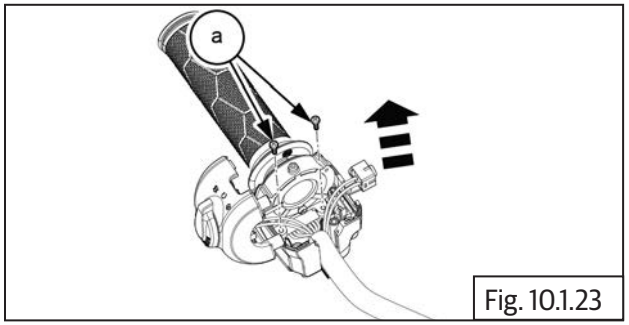

Fig. 10.1.23

	Philips Screw Driver

- Remove throttle grip **(a)** from RH switch cube.

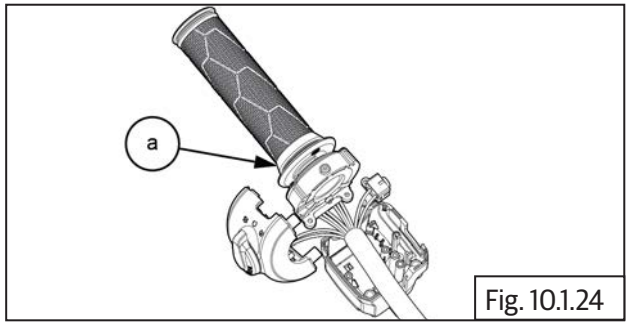

Fig. 10.1.24

10.1.16. Clutch Switch

- Remove the Seat assembly.
- Remove the Fuel tank.
- Disconnect clutch switch coupler **(a)**.

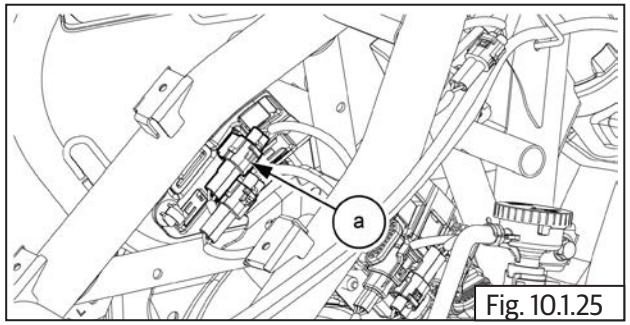

Fig. 10.1.25

- Loosen and remove 1 Nos of screw **(a)** from clutch lever .

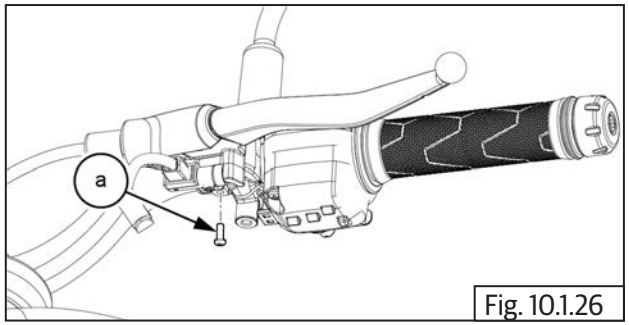

Fig. 10.1.26

	Screw Driver (+)

- Remove the clutch switch **(a)** from clutch lever.

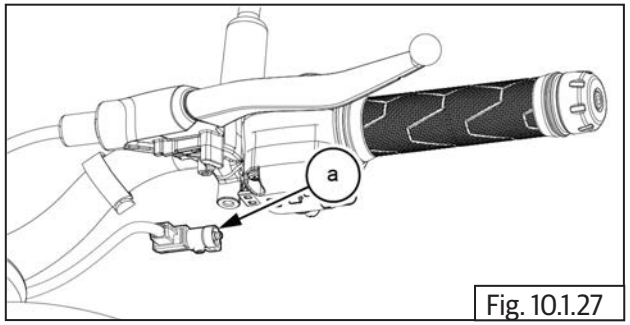

Fig. 10.1.27

Assembly

10.1.15. Engine Control Unit (ECU)

⚠ CAUTION

Before assembling any part of the EMS, the Ignition switch and Engine stop switch MUST be in OFF position

Before connecting ECU into wiring harness, the battery terminals must be disconnected from the battery.

- Attach the EMS throttle body **(a)** to the transition piece.

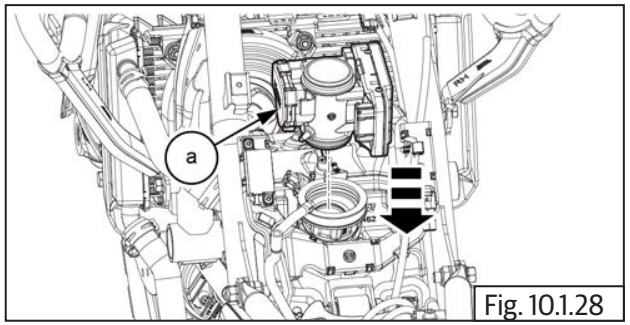

Fig. 10.1.28

- Connect the EMS throttle body (b) to the transition piece by tightening the worm clip screws **(M5) (a)**.

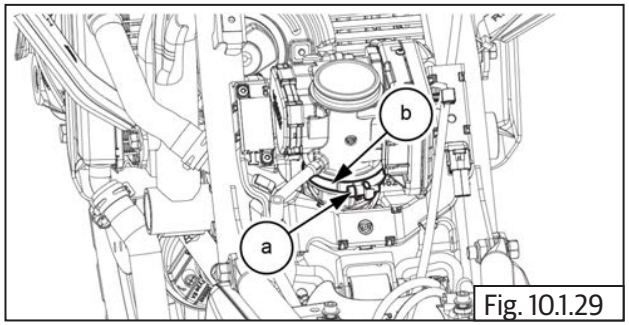

Fig. 10.1.29

	4 mm Allen socket with ratchet
Torque	2.5±0.5 N·m / 0.2 ± 0.05 kgf m

- Connect the EVAP hose (a) to the throttle body..

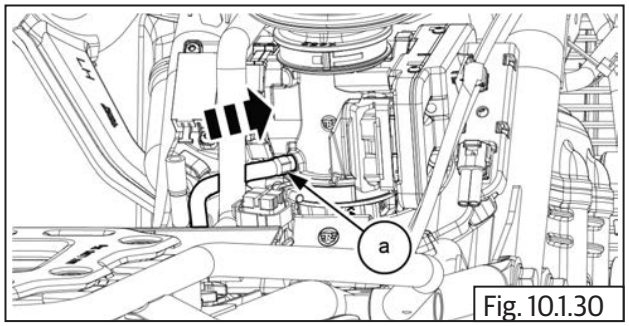

Fig. 10.1.30

- Install the following parts:
- Install the battery terminals.
- Install the Fuel tank.
- Install the Seat assembly.

⚠ CAUTION

Ensure the locks are fully lifted up and released, before connecting wiring connectors into ECU.

Ensure the locks are handled with care and do not get damaged or broken

Damaged or broken locks will result in loose connections and cause the ECU to fail.

10.1.16. Fuel injector

- Fuel injector are located on the intake manifold.

NOTE
• *Lubricate the* Injector 'O' ring **(a)** before assemble.

	GL80W90

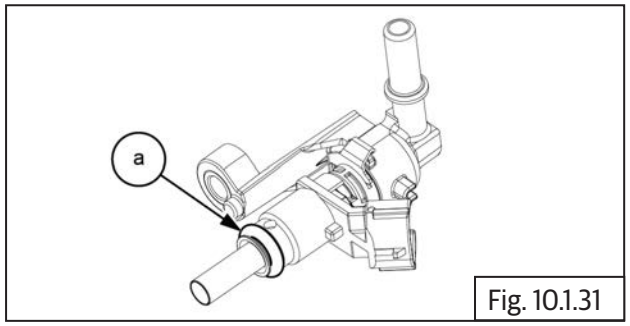

Fig. 10.1.31

- Locate and tighten 1 No **(M6)** injector mounting bolt **(a)**.

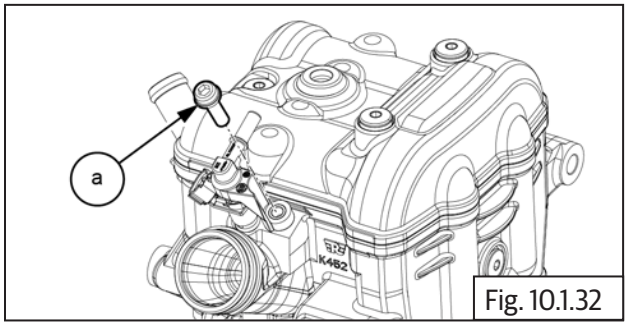

Fig. 10.1.32

	5 mm Allen Key with ratchet
Torque	11 N-m /1.1 kgf-m

- Gently locate the injector assembly **(a)**.

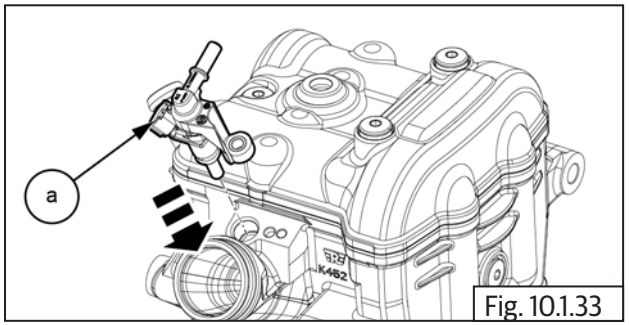

Fig. 10.1.33

- Locate and tighten 1 No **(M6)** injector mounting bolt **(a)**.

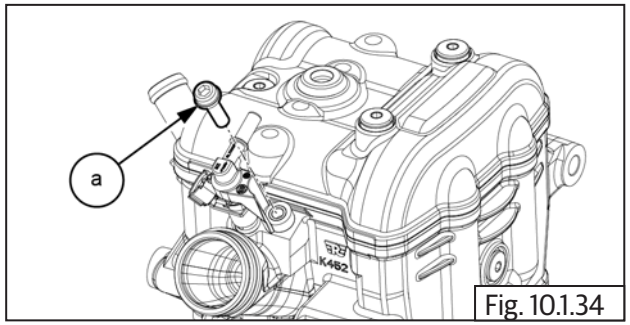

Fig. 10.1.34

	5 mm Allen Key with ratchet
Torque	11 N-m /1.1 kgf-m

- Connect fuel hose **(a)** into injector cap.

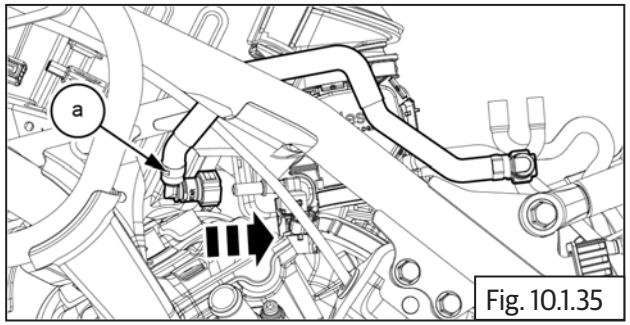

Fig. 10.1.35

- Connect coupler into injector assembly **(a)**.

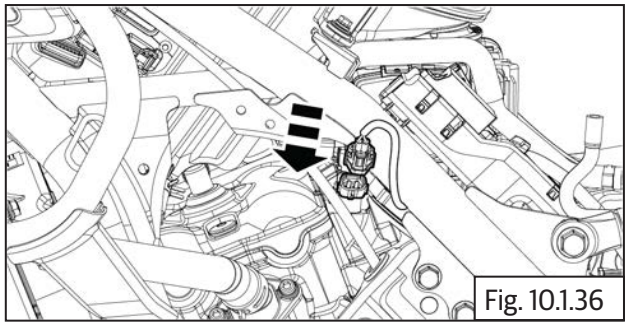
Fig. 10.1.36

⚠ CAUTION

Ensure the following:

Fuel is refilled into fuel tank.

Fuel feed and return hoses are connected into fuel rail.

Wiring couplers to fuel pump and low fuel sensor are connected.

EVAP hose pipes are connected.

Water drain hose are connected.

- Assemble the following parts:
  - Fuel tank .
  - Rider seat.

10.1.16. Fuel Pump

- Then realign the module to back side and then push the electrical connector **(a)**. without damaging locks provided in the connector.

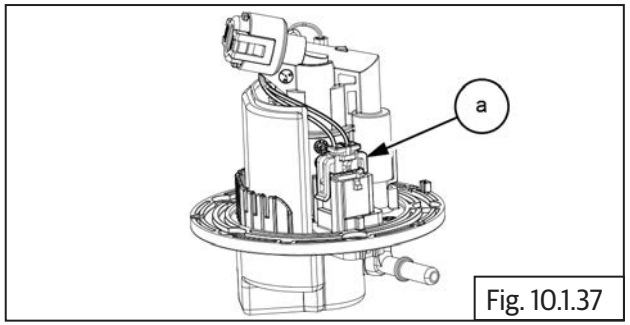

Fig. 10.1.37

- Confirm the snap lock is properly fitted.
- Locate new seal **(a)** into fuel pump.

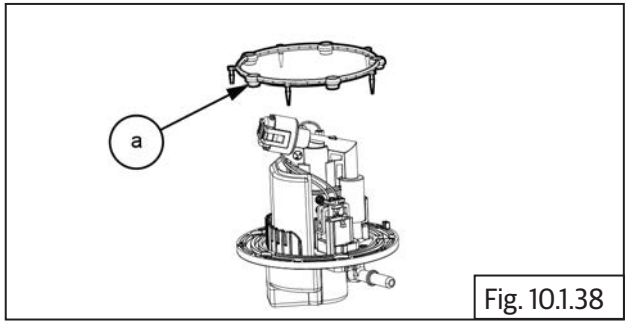

Fig. 10.1.38

- Locate and place the fuel pump **(a)** into fuel tank.

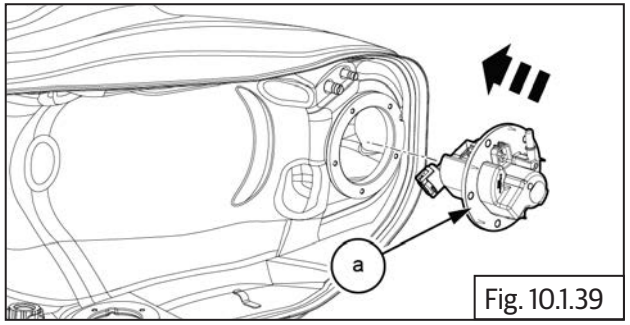

Fig. 10.1.39

- Ensure the pump cover slot should be match to fuel tank slot.

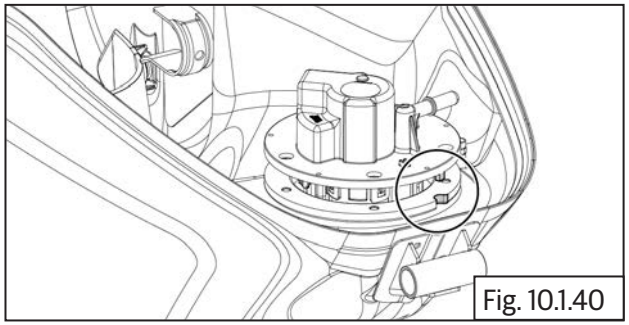

Fig. 10.1.40

NOTE
• *Fuel pump assembly to the tank it can be assembled in only one direction.*

- Locate and position the lock plate **(a)** on the fuel pump.

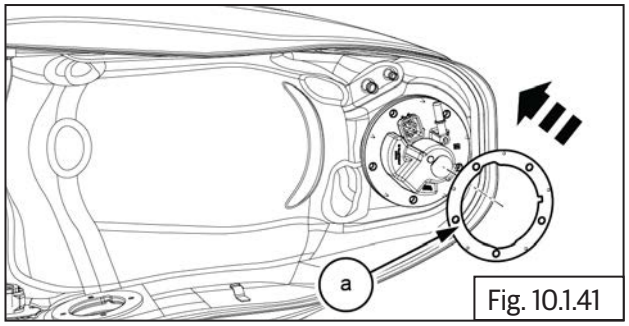

Fig. 10.1.41

- Locate the 5 Nos.Hex head flange bolts **(M5) (a)** on the fuel pump.

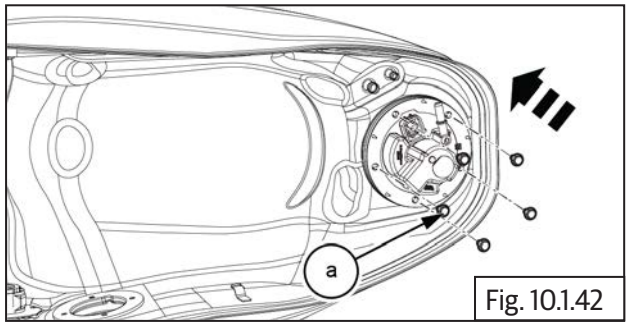

Fig. 10.1.42

- Tighten the bolts below sequence.

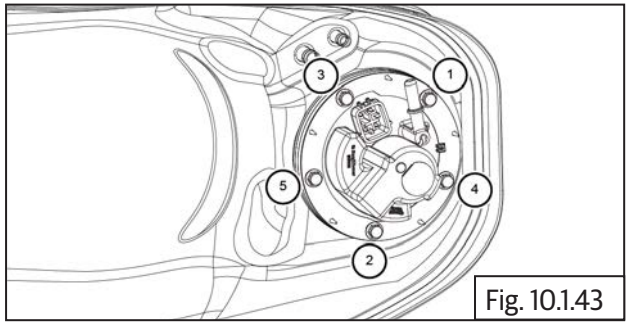

Fig. 10.1.43

	8 mm Socket with Ratchet
Torque	5 N-m / 0.5 kgf-m

- Assemble fuel tank assembly.

⚠ **CAUTION**
• **Ensure the following:**
• **Fuel is refilled into fuel tank.**
• **Fuel feed and return hoses are connected into fuel rail.**
• **Wiring couplers to fuel pump and low fuel sensor are connected.**
• **EVAP hose pipes are connected.**
• **Water drain hose are connected.**

⚠ **WARNING**
Gasoline is extremely flammable.

- Assemble rider seat.
- Assemble side panel RH.

10.1.16. Coolant Temperature Sensor

- Remove coolant temperature sensor coupler **(a)**.

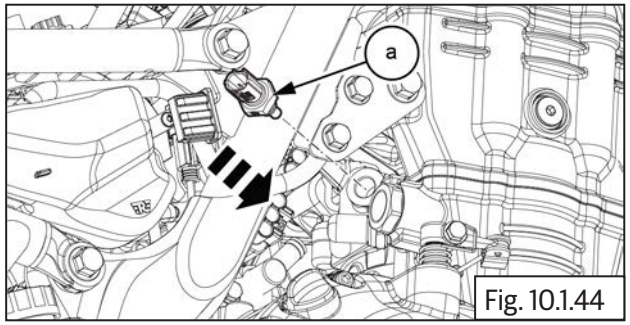

Fig. 10.1.44

	10 mm Socket with Ratchet
Torque	5 N-m / 5.0 kgf-m

- Connect coolant temperature sensor coupler **(a)**.

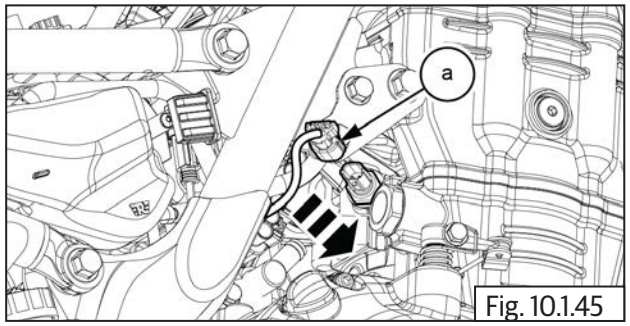

Fig. 10.1.45

10.1.17. Throttle Body

- Ensure Ignition switch and Engine stop switch are in "OFF" position.

NOTE

- *Ensure both screws are sufficiently loosened and the worm clips rotates easily in the groove in the manifolds.*
- *Ensure both screws are sufficiently loosened, and the worm clips rotates easily in the groove in the air filter bellows worm clips.*

- Gently locate throttle body into inlet manifold rubbers with fuel rail and injectors and ISC/TPS.
- Tighten worm clip screw on inlet manifold on Cylinder (RH).
- Tighten worm clip screw on inlet manifold on Cylinder (LH) .
- Tighten wire clips on the LH and RH air filter connection tubes.
- Tighten the 2 Nos. air filter box assembly mounting bolts.
- Insert MAP sensor vacuum hose into throttle body.
- Insert EVAP hoses into throttle body.
- Connect electrical couplers into TPS, idle speed control stepper motor and Fuel injectors LH and RH.
- Assemble the following:
  - Fuel tank assembly.

⚠ CAUTION

- **Ensure the following:**
- **Fuel is refilled into fuel tank.**
- **Fuel feed and return hoses are connected into fuel rail.**
- **Wiring couplers to fuel pump and low fuel sensor are connected.**
- **EVAP hose pipes are connected.**
- **Water drain hose are connected.**

⚠ WARNING

Gasoline is extremely flammable.

10.1.18. Engine Oil Temperature Sensor (EOT)

- Locate and tighten the Oil pressure switch **(a)** along with washer **(b).**

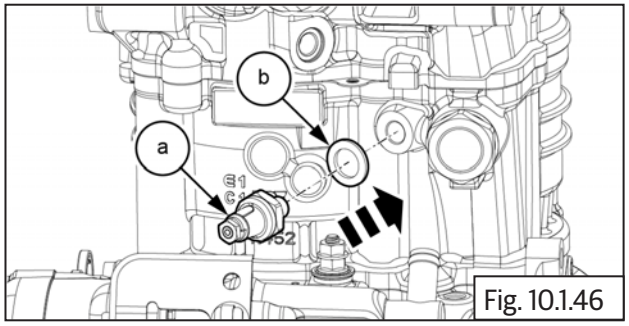

Fig. 10.1.46

	21 mm Long Socket with Ratchet

- Connect the oil pressure switch coupler **(a).**

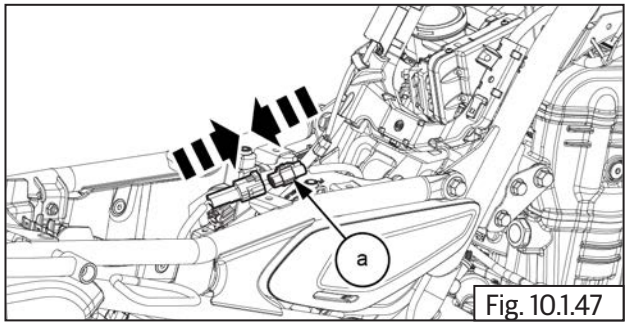

Fig. 10.1.47

- Place a small tray under EOT to collect the oil when it is loosened and removed.
- Insert EOT wiring coupler through a deep grooved ring spanner and locate the spanner on the EOT hex head correctly.

10.1.19. HEGO (O2) Sensors

- The HEGO sensors are located on the exhaust pipes near the cylinder head.

⚠ WARNING

The engine and exhaust systems get extremely hot during normal operation and can result in serious burns if touched. Make sure exhaust pipes are not hot and is at the same levels of ambient/surrounding temperature, whenever working on the engine or exhaust systems.

NOTE

- *Ensure the engine/exhaust is cold before assembling the HEGO (O2) sensors.*
- *Ensure Ignition switch and Engine stop switch are in OFF position.*

- Gently locate and tighten the Oxygen sensor **(a)** into exhaust pipe.

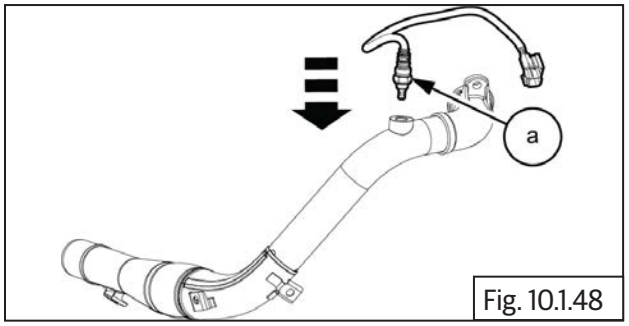

Fig. 10.1.48

	17 mm Double end spanner/Deep groove spanner
Torque	18 N-m / 1.8 kgf-m

- Connect the 1 Nos omega clip **(a)** into Oxygen Sensor wiring harness.

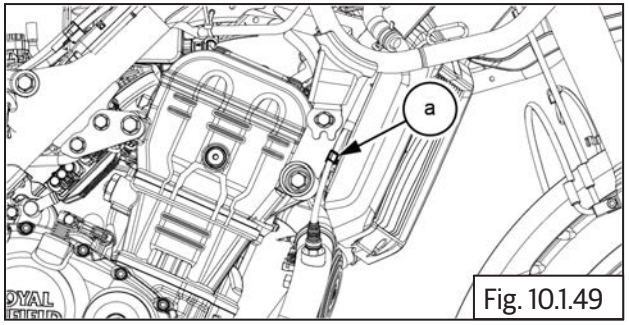

Fig. 10.1.49

	Screw driver

- Oxygen sensor coupler located on RHS chassis frame.
- Connect oxygen sensor connector.

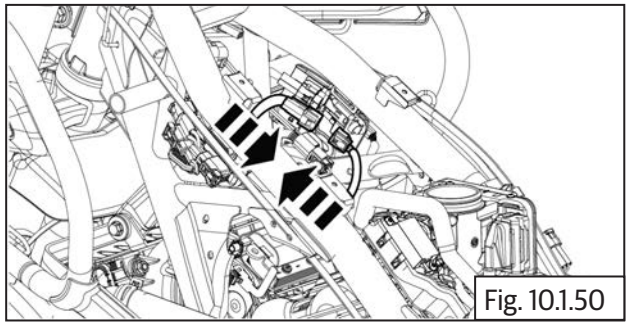
Fig. 10.1.50

	17 mm Double end spanner/Deep groove spanner

10.1.20. Purge Valve

- Connect output hose **(a)** to purge valve.

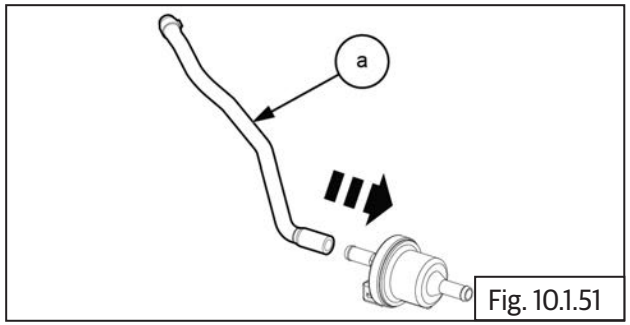

Fig. 10.1.51

- Fix purge valve into the rubber boot **(a)**.

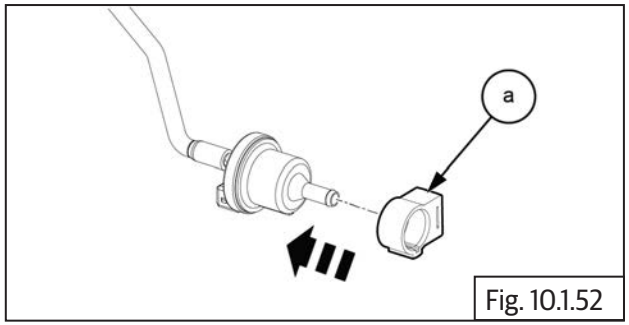

Fig. 10.1.52

- Locate the purge valve with hose assembly **(a)** on LHS chassis fame.

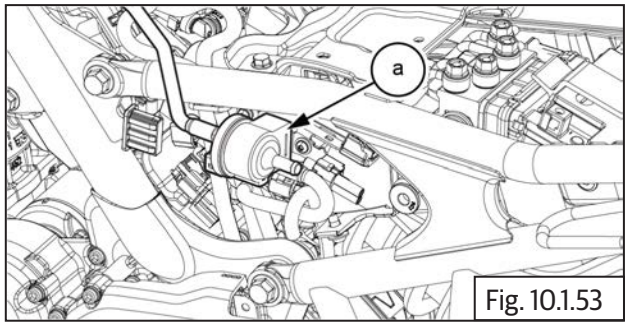

Fig. 10.1.53

- Connect input hose **(a)** to purge valve.

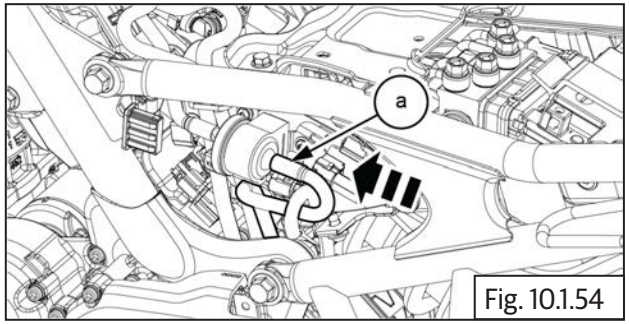

Fig. 10.1.54

- Slide and fix the purge valve with rubber boot **(a)** to the bracket.

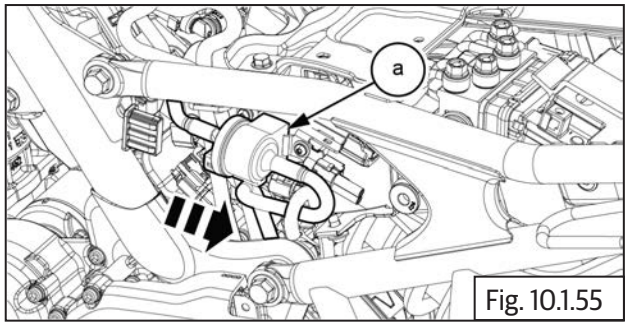

Fig. 10.1.55

- Connect hose **(a)** to throttle body.

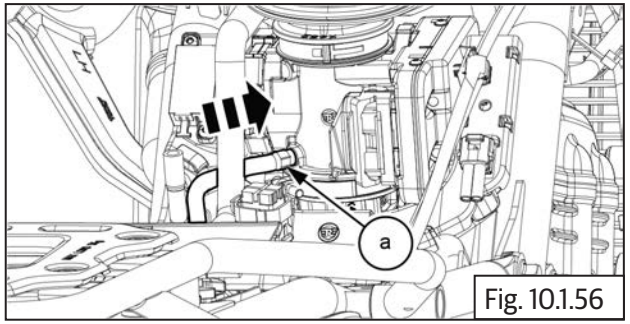

Fig. 10.1.56

- Connect electrical coupler **(a)** to purge valve.

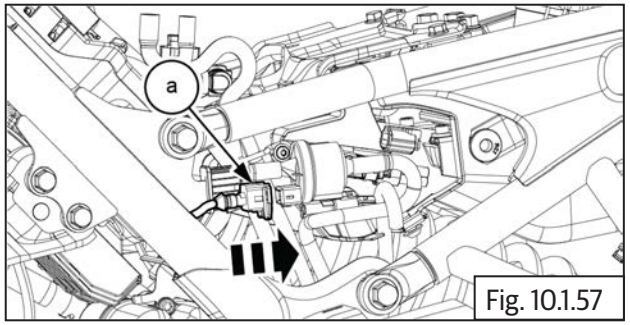

Fig. 10.1.57

- Assemble the Fuel Tank.
- Assemble the Seat assembly.
- Assemble the LH Infill Panel.

10.1.21. Ignition Coil

- Locate the ignition coil with high tension cable on air filter box **(b)**.
- Locate and tighten **2 Nos** cap head screws **(M6)** on ignition coil **(a)**.

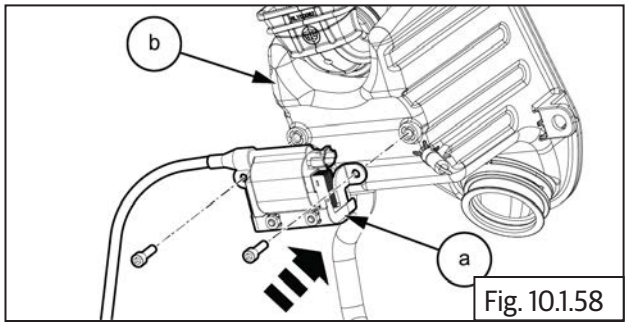

Fig. 10.1.58

	5mm Allen key and Ratchet
Torque	3 to 4 N·m -/ 0.3 to 0.4 kgf-m

- Locate the air filter box **(a) with** ignition coil on front chassis frame.

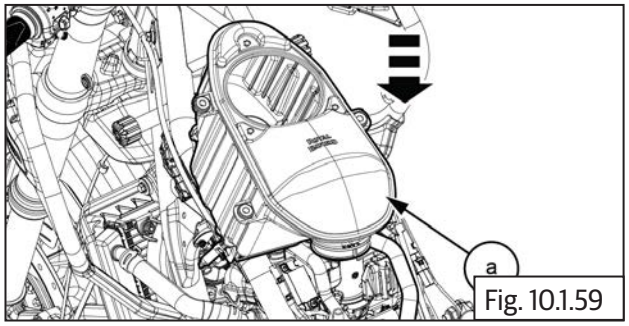

Fig. 10.1.59

- Connect the **2 Nos** ignition coil couplers **(a)**.

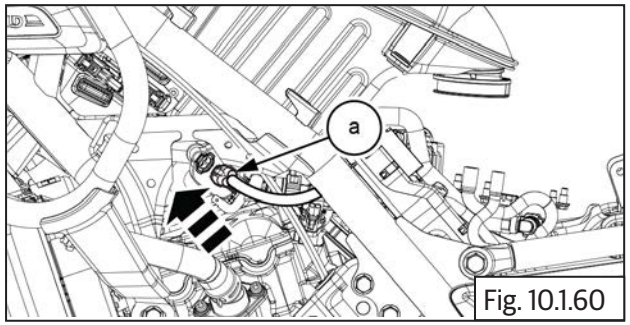

Fig. 10.1.60

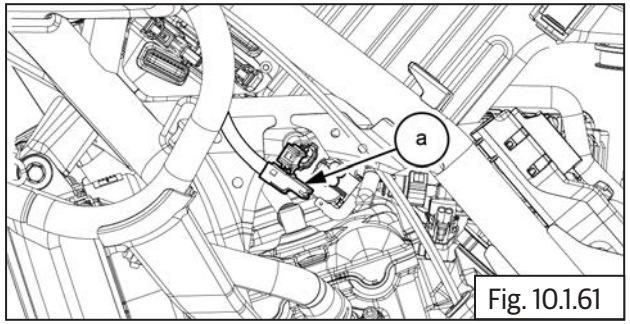

Fig. 10.1.61

- Connect spark plug cap **(a)** on engine.

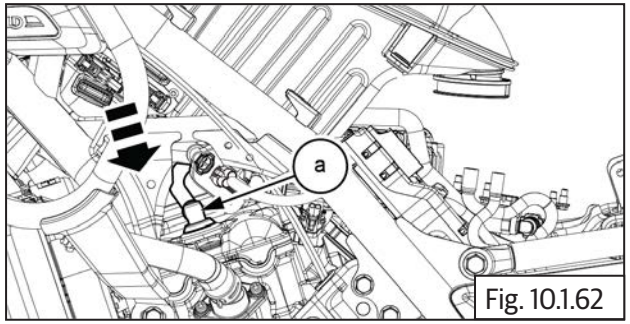

Fig. 10.1.62

- Assemble the Air Filter.
- Assemble the fuel tank.
- Assemble the Seat.

⚠ CAUTION

- **Ensure the following:**
- **Fuel is refill into fuel tank.**
- **Fuel feed and return hoses are connected into fuel rail.**
- **Wiring couplers to fuel pump and low fuel sensor are connected.**
- **EVAP hose pipes are connected.**
- **Water drain hose are connected.**

⚠ WARNING

Gasoline is extremely flammable.

10.1.22. Crank Position Sensor

- Gently Install the magneto starter **(a)** into LH side cover assembly.

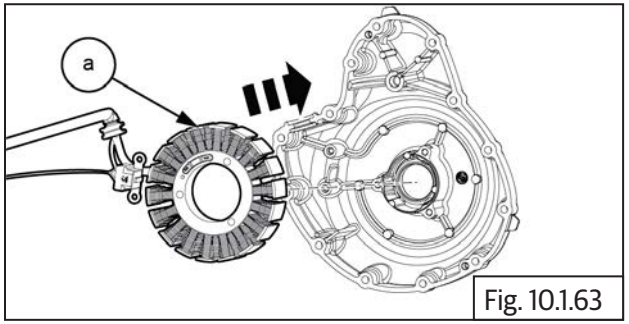

Fig. 10.1.63

- Locate and tighten 3 Nos. Hex socket head screws **(M6) (a)** on magneto starter mounting.

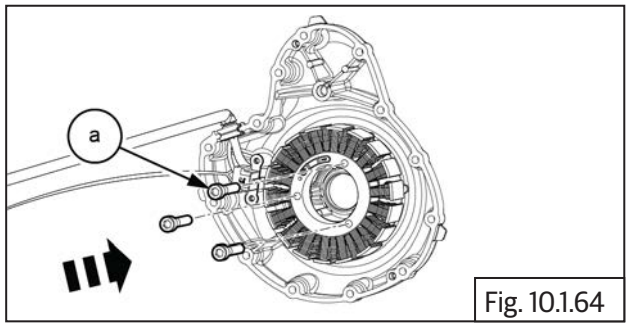

Fig. 10.1.64

	5 mm Allen Key with ratchet
Torque	11 N-m / 1.1 kgf-m

- Gently insert wiring grommet **(a)** into magneto cover.

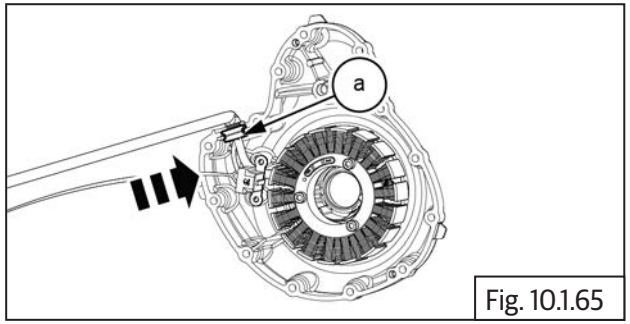

Fig. 10.1.65

	Loctite Superflex 24

NOTE
• **Apply the Loctite Superflex 24 to on cable grommet.**

- Locate and tighten 2 Nos. Hex socket head screws **(M5) (a)** on crank position sensor (CPS).

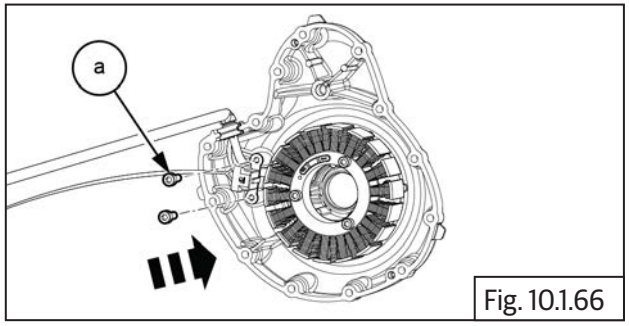

Fig. 10.1.66

	4 mm Allen Key with ratchet
Torque	9 N-m / 0.9 kgf-m

	Loctite 243

NOTE
• **Apply the** *Loctite 243* **on bolts.**

- Assemble the FD sprocket cover.
- Assemble the Cover LH from Engine Refer.
- Assemble the Fill engine oil.

10.1.23. Gear Position Sensor

- The gear position sensor is located on the crankcase LH before FD sprocket
- Ensure Ignition switch and Engine stop switch are in OFF position.

NOTE
• *O ring to checked and replace if required.*
• *Apply tire lube or silicone lube on O ring (all around 360).*

- Install Gear position sensor **(a)** from engine.

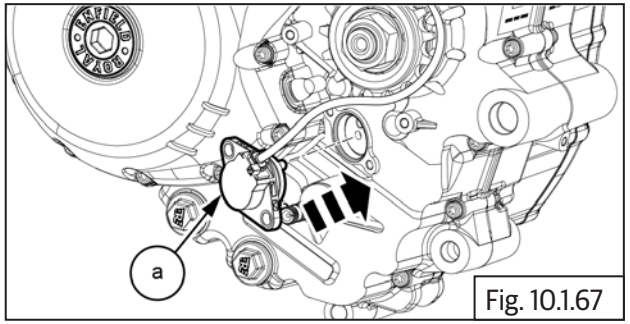

Fig. 10.1.67

- Locate and tighten 2 Nos. **(M6)** Gear position sensor mounting bolts **(a)**.

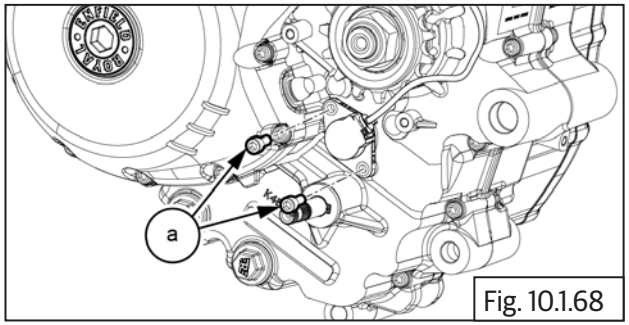

Fig. 10.1.68

	4 mm Allen Key with ratchet
Torque	11 N-m /1.1 kgf-m

- Install the cable guide bracket **(a)** .

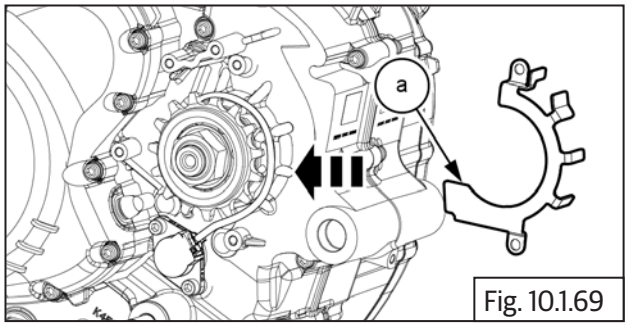

Fig. 10.1.69

- Locate and tighten 2 Nos. Hex socket head bolts **(M6) (a)** gear position sensor cable mounting.

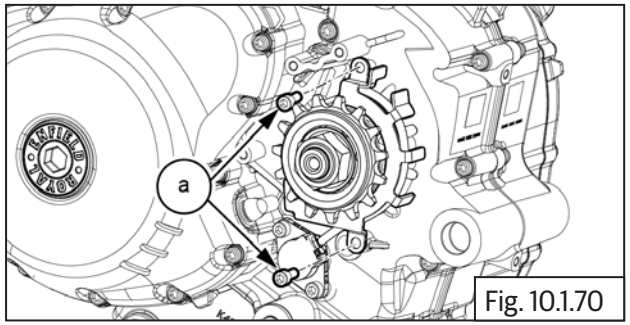

Fig. 10.1.70

	4 mm Allen Key with ratchet
Torque	11 N-m /1.1 kgf-m

- Install Cable mounting bracket **(a)** on the engine.

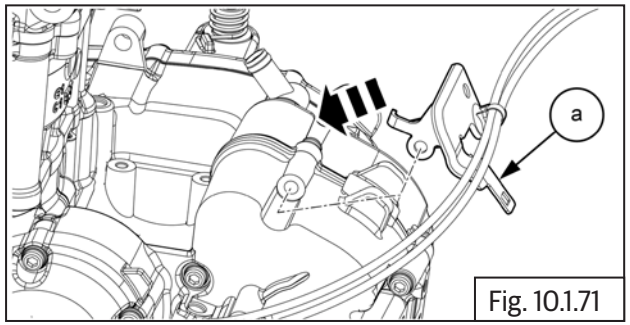

Fig. 10.1.71

- Locate and tighten 1 No **(M6)** Cable mounting bolt **(a)**.

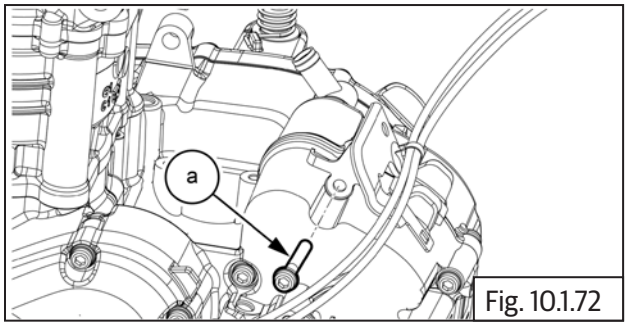

Fig. 10.1.72

	4 mm Allen Key with ratchet
Torque	11 N-m /1.1 kgf-m

- Assemble FD sprocket cover.

10.1.25. Side Stand Switch

⚠ CAUTION

Ensure the motorcycle is upright on a firm and flat surface.

- Locate the side stand switch **(a)** into frame .

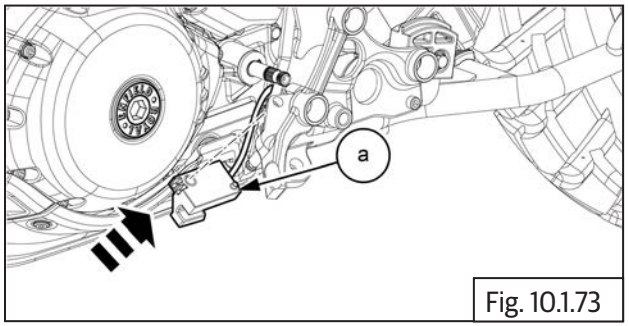

Fig. 10.1.73

- Locate and tighten 1 Nos. hex flange bolt **(M6) (a)** & hex nut **(b)** into side stand switch plate.

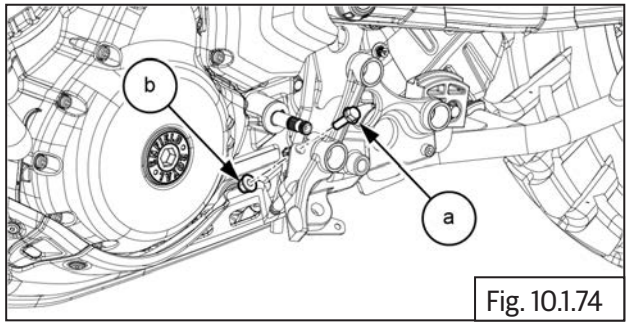

Fig. 10.1.74

	6 mm Allen Socket with Ratchet
Torque	10 Nm / 1.0 kgf-m

- Apply grease on the inner surface of the stand.
- Locate side stand **(a)** into the frame.

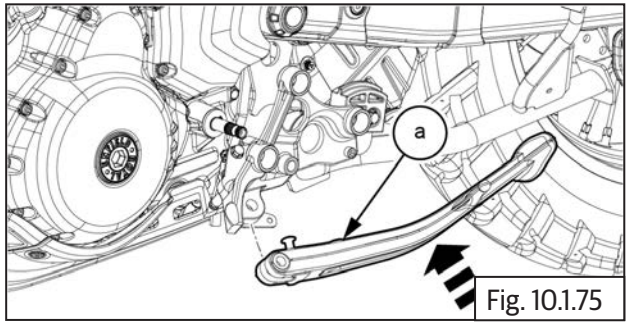

Fig. 10.1.75

- Locate clevis pin **(a)** into side stand.

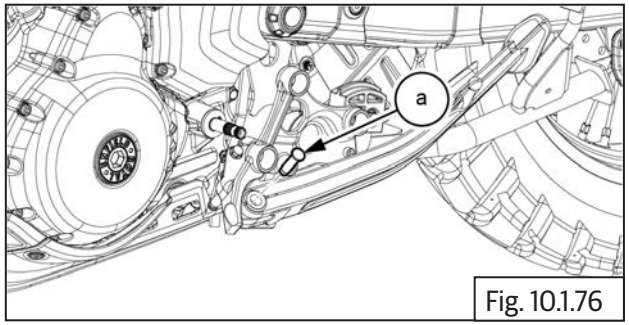

Fig. 10.1.76

- Insert split pin **(a)** into the clevis pin.

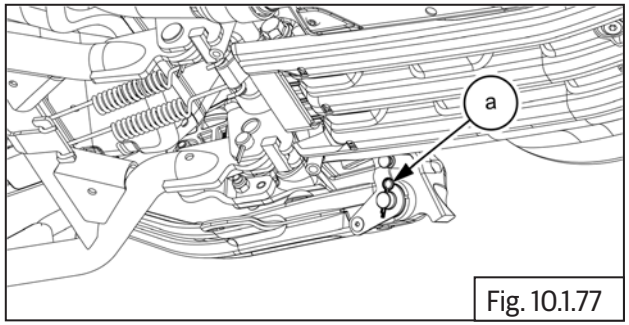

Fig. 10.1.77

	Nose plier

- Install spring **(a)** into the side stand.

NOTE
• *Spring must be orientated as per below image.*

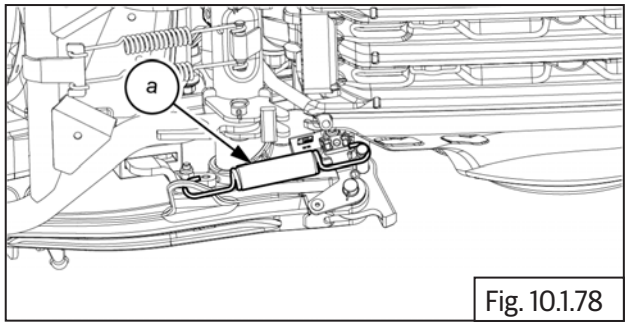

Fig. 10.1.78

	Screw driver

- Connect the side stand switch coupler **(a)**.

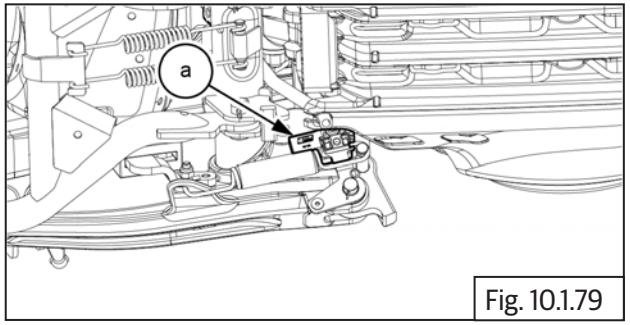

Fig. 10.1.79

	12 mm Socket with Ratchet
Torque	25 N-m/2.5 kgf-m

10.1.26. Starter Motor Solenoid

- Locate and tighten the nut to self motor main cable **(a)**.

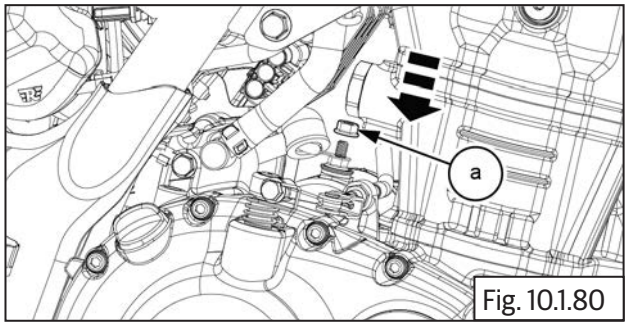

Fig. 10.1.80

	10 mm Socket with Ratchet
Torque	3.5 - 4 N-m / 0.35 - 0.4 kgf-m

- Locate and align starter relay **(a)** to battery tray.

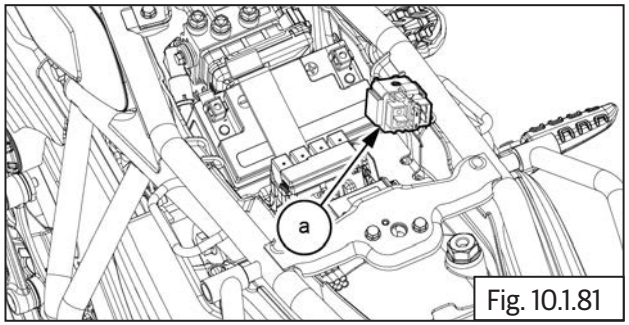

Fig. 10.1.81

- Locate the battery main cables **(a)** to starter relay.

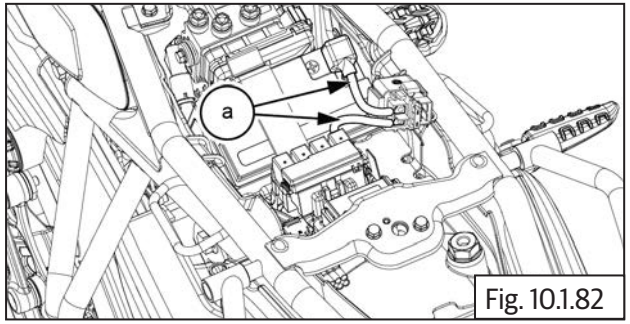

Fig. 10.1.82

- Locate and tighten the 2 Nos screws **(a)** to the main cable.

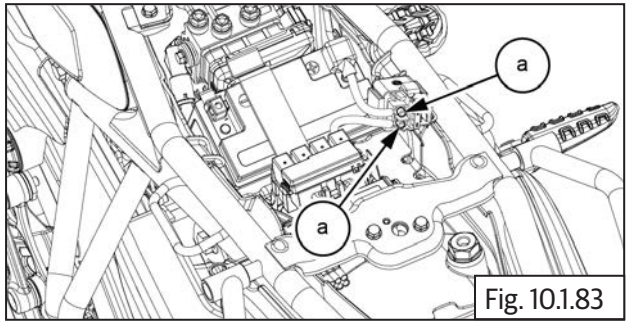

Fig. 10.1.83

	4mm Allen socket with ratchet
Torque	5 N-m / 0.5 kgf-m

- Insert the starter relay **(a)** into the slot.

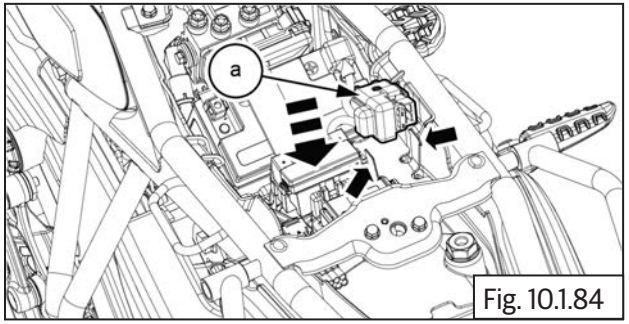

Fig. 10.1.84

- Close the cap **(a)** on the starter relay.

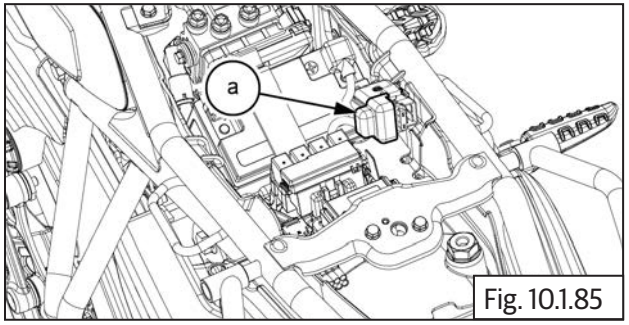

Fig. 10.1.85

- Connect the starter relay coupler **(a)**.

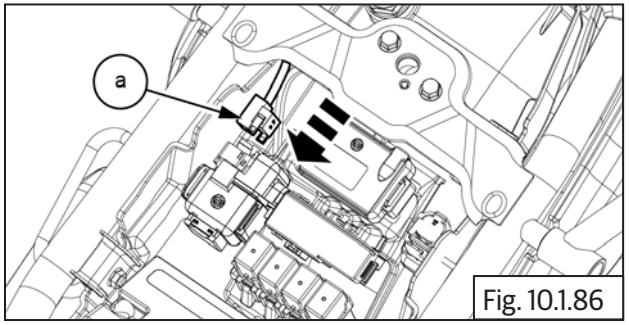

Fig. 10.1.86

- Assemble the Rear mudguard in fill cover.
- Assemble the Wheel speed sensor front and rear.
- Assemble the Battery from frame.
- Assemble the RH side Panel.
- Assemble the LH side Panel.

10.1.27 Throttle Grip Assembly

- Locate the throttle grip **(a)** into RH switch cube.

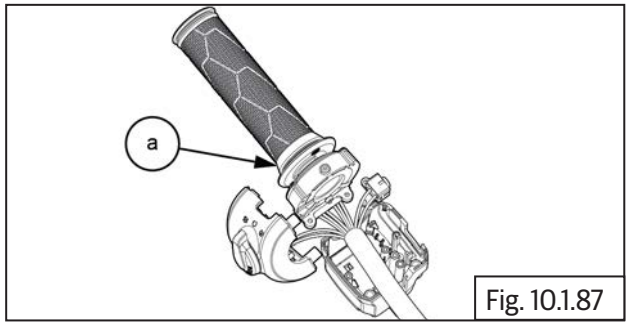

Fig. 10.1.87

- Locate and tighten 2 Nos. philips head screws **(a)** into throttle grip.

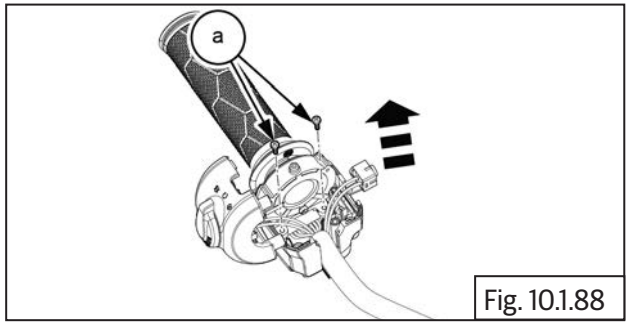

Fig. 10.1.88

	Philips Screw Driver

- Gently locate the mode switch **(c)** along with button **(a)** & spring **(b)** into lower RH switch cube.

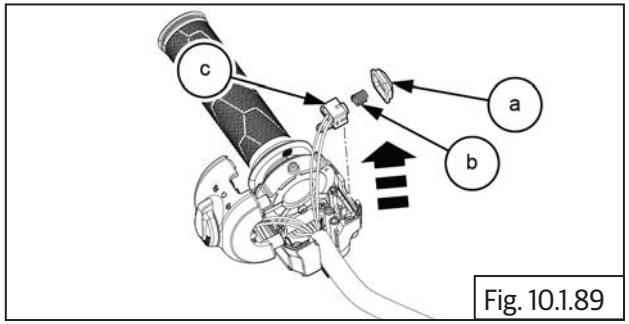

Fig. 10.1.89

- Locate and tighten 2 Nos. philips head screws **(a)** into the mode switch.

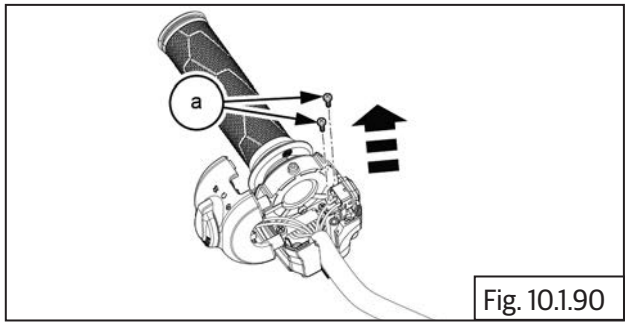

Fig. 10.1.90

	Philips Screw Driver

- Locate wire stopper **(a)** into lower RH switch cube **(b)**.

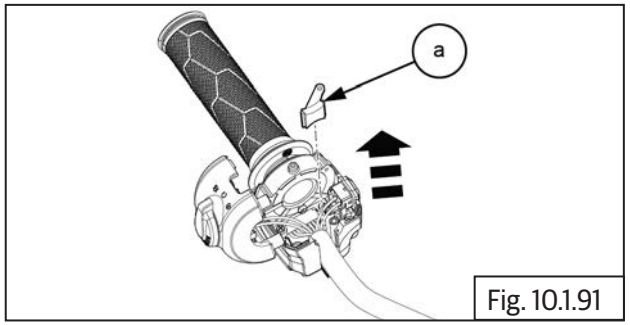

Fig. 10.1.91

- Locate and tighten 1 Nos. philips head screw **(a)** into the wire stopper.

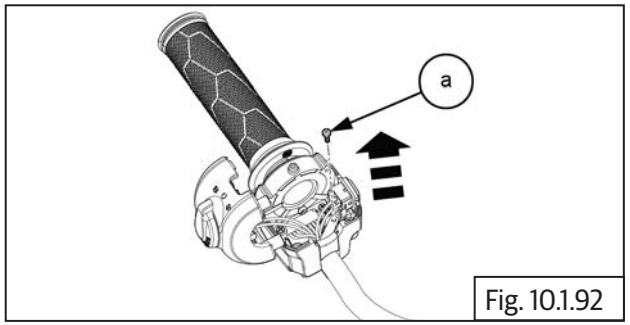

Fig. 10.1.92

	Philips Screw Driver

- Gently align the upper RH switch cube **(a)** and lower RH switch cube **(b)** along with throttle grip into handle bar.

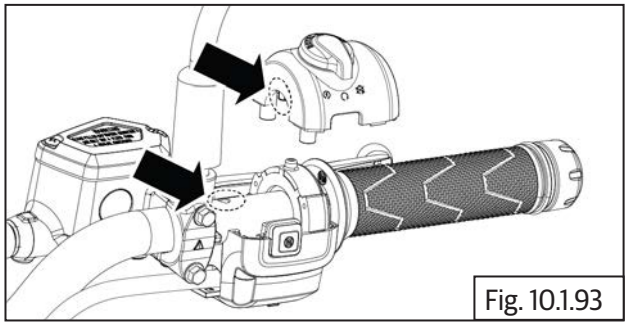

Fig. 10.1.93

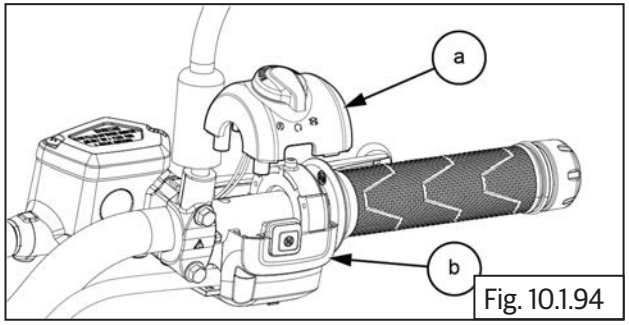

Fig. 10.1.94

- Locate and tighten 2 Nos. philips head screws **(a)** from the RH switch cube along with throttle grip into handle bar.

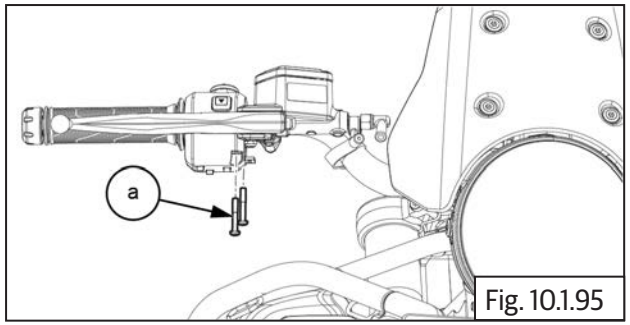

Fig. 10.1.95

	Philips Screw Driver

- Connect Accelerator position sensor coupler **(a)**.

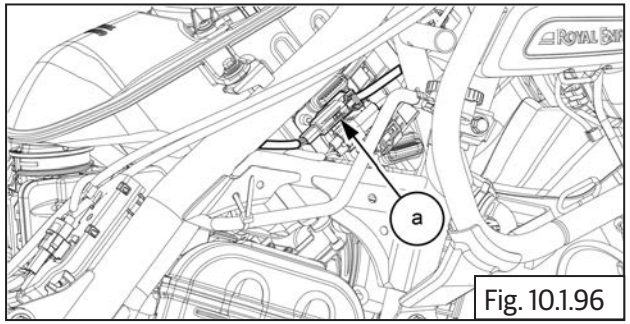

Fig. 10.1.96

- Assembly the Fuel tank.
- Assembly the Seat assembly.

10.1.16. Clutch Switch

- Locate the clutch switch **(a)** into clutch lever.

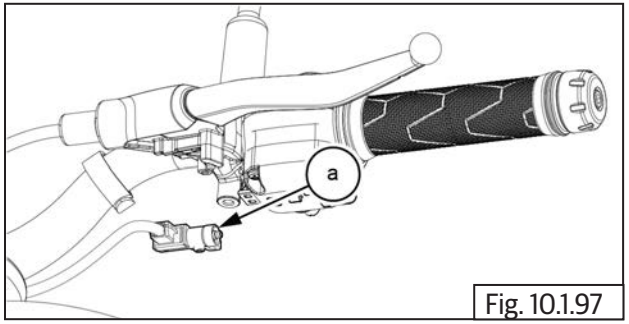

Fig. 10.1.97

- Locate and tighten 1 Nos of screw **(a)** into clutch lever .

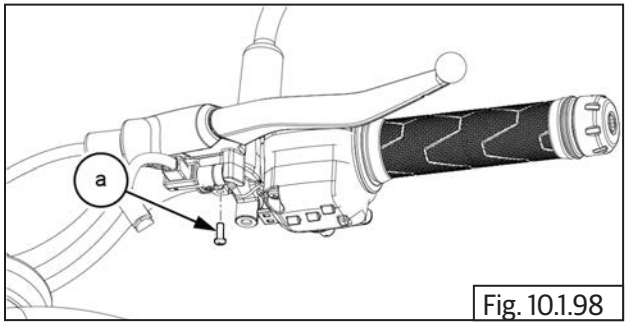

Fig. 10.1.98

	Screw Driver (+)

- Connect clutch switch coupler **(a)**.

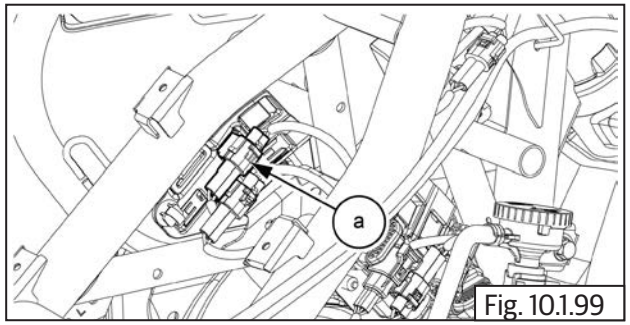

Fig. 10.1.99

- Assembly the Fuel tank.
- Assembly the Seat assembly.

10.1.27 Actuator

Actuator Tests

- The following actuators can be tested for their functionality using the diagnostic tool/ PC software.
  1. Fuel Pump
  2. Injector
  3. Ignition Coil
  4. O2 sensor heater
  5. Malfunction Indication Lamp (MIL)
  6. Idle Air Control Valve (IACV)
  7. Canister Purge Valve (CPV)
  8. Accessory Relay

Test Procedure

- **Entry Conditions**
  1. Actuator tests can be carried out when the ignition key and kill switch are ON and engine speed is 0.
  2. For IACV alone, engine speed can be greater than 0.
  3. For actuation of injector and ignition coil, gear should be in neutral. If not in neutral, clutch lever should be pressed.
  4. Errors associated to the corresponding actuator, if present, will inhibit the actuation.
- **Procedure**

A. In EOL software

1. Connect the tool with the diagnostic coupler in the vehicle and connect it with PC using the USB cable.
2. Select the option "EOL" & select Actuator.
3. Select the required actuator and press.

B. In NACSII tool

1. Connect the tool with the diagnostic coupler in the vehicle

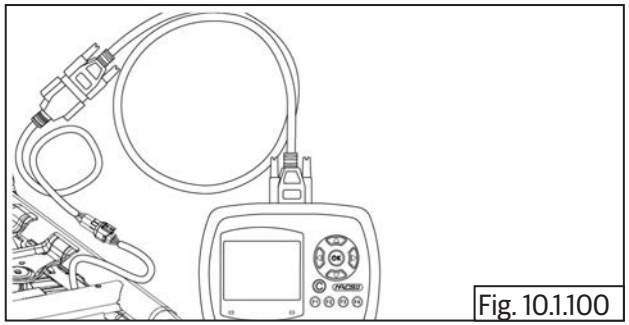
Fig. 10.1.100

2. Select the vehicle model name and select Bosch Engine Management System
3. Select the option Actuator
4. Select the required actuator and press F3 to actuate

- **Method of verification**

4. For fuel pump, when actuated, an audible sound can be heard for 5 seconds .

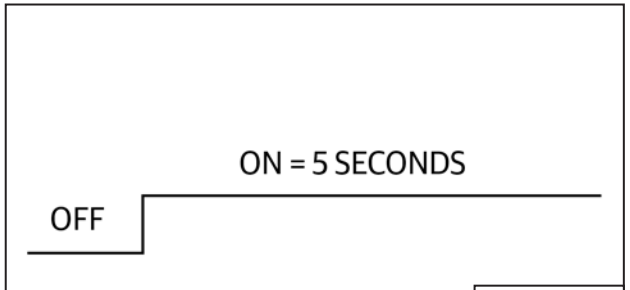

Fig. 10.1.101

5. Prior to actuation of injector, prime the fuel pump 3 times to build up sufficient pressure in fuel line. To ensure injectors are working properly, remove the throttle body from the intake manifold, connect all

the injector couplers and actuate. When actuated, 3 pulses of fuel spray from the injector can be seen.

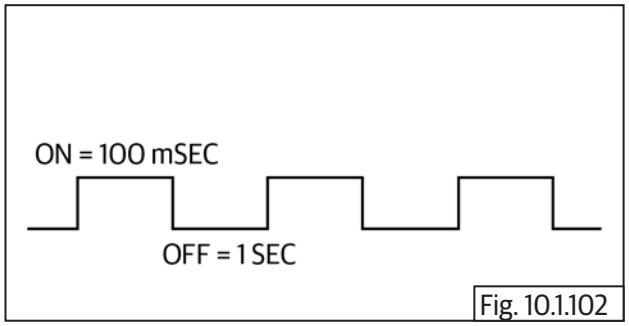

Fig. 10.1.102

6. Prior to the actuation of ignition coil, remove the suppressor cap and connect with an external spark plug and ground it to engine. Do not ground the ignition coil directly. When actuated, 3 sparks can be seen.

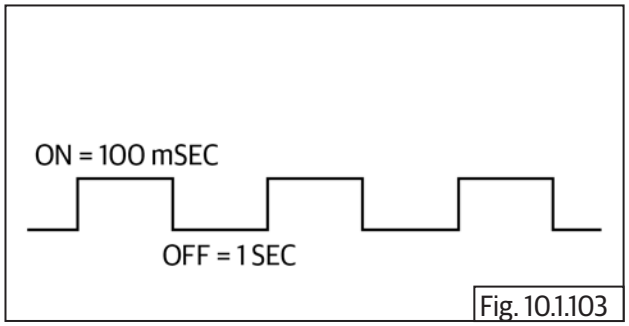

Fig. 10.1.103

7. To check O2 sensor heater, the sensor has to be removed from the exhaust pipe. When actuation is requested, the sensor will get heated up and this happens for 5 seconds.

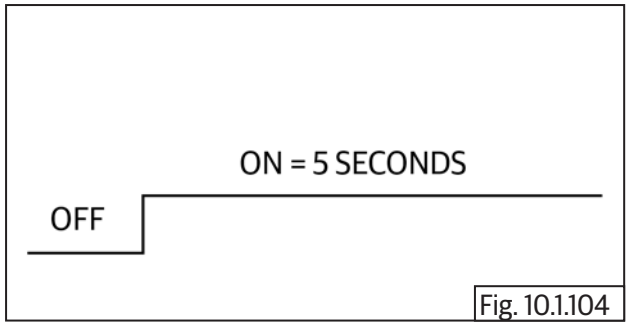

Fig. 10.1.104

8. When MIL is actuated, the bulb goes ON & OFF for 5 times.

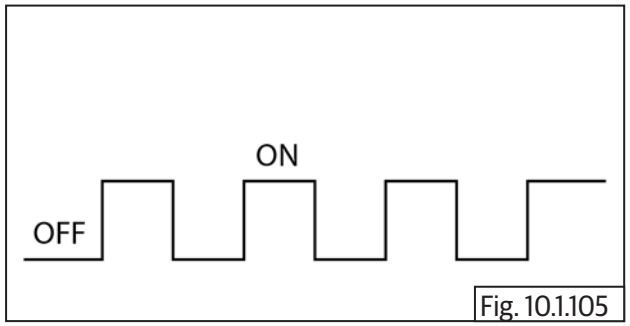

Fig. 10.1.105

9. Start and idle the engine before actuating IACV. If actuation command is given, one can observe the engine rpm rising up & falling down the target idle speed. Once actuation is completed, it settles back to target idle speed.

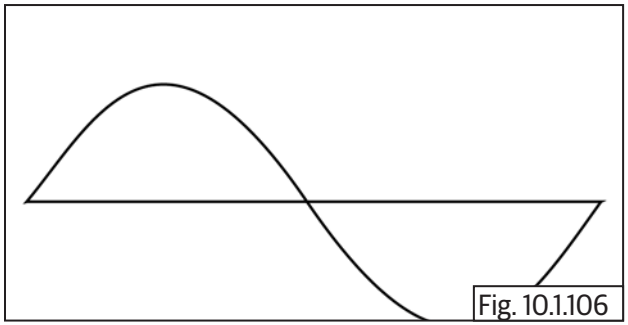
Fig. 10.1.106

10. When CPV is actuated, a pulsating sound can be observed. If not, the canister purge valve has to be manually touched to feel actuation.

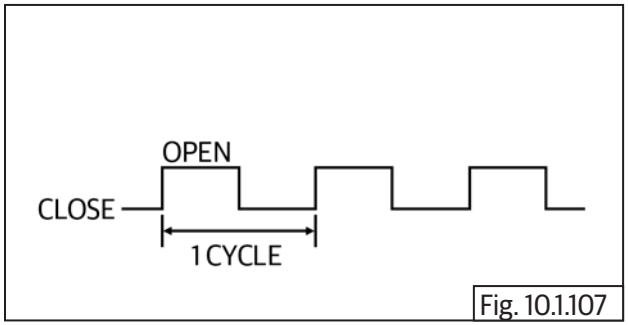

Fig. 10.1.107

11. Accessory relay gets actuated for 5 cycles.

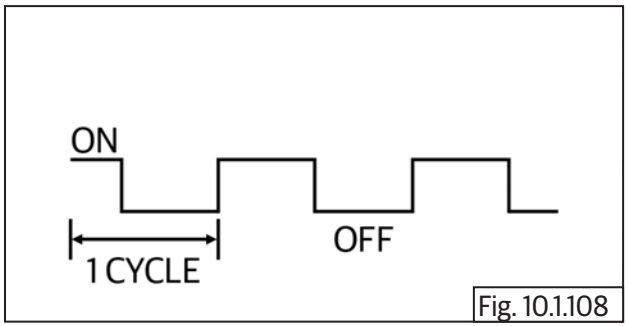

Fig. 10.1.108

EMS ADAPTATION PROCEDURE

EMS Adaptation procedure

The following procedure to be followed when if any change in the EMS sensors or fuel type:

Step 1 - Check for the Engine Oil Temperature (EOT) at start is less than **40°C.**

Step 2 - Allow the engine to idle and leave it undisturbed till the engine oil temperature reaches **115°C**. (Time required for the EOT to reach 115°C is 30 minutes approx.)

Step 3 - Once the engine oil temperature reached **115°C**, turn "OFF" the ignition key and DO NOT turn it back "ON" for 30 seconds.

ELECTRICAL SYSTEM

CONTENTS PAGE

11. Electrical System..... 525
11.1 Battery Dismantling..... 525
11.2 RR Unit..... 526
11.3 Electronic flasher..... 527
11.4 Starter relay with cable..... 527
11.5 Headlamp Dismantling..... 528
11.6 Front Trafficators LH..... 529
11.7 Front Trafficators RH..... 530
11.8 TFT Instrument Cluster..... 530
11.9 Ignition Switch Cum Steering Lock..... 531
11.10 Rear Trafficator..... 532
11.11 License plate illuminator..... 533
11.12 Ambient temperature sensor..... 533
11.13 Horn Dismantling..... 533
11.14 USB C type adaptor..... 534
11.15 Rear wiring harness..... 534
11.16 Complete Wiring Harness Removal..... 534
Inspection..... 539
Assembly..... 539
11.17. Complete Wiring Harness Installation..... 539
11.18 Rear wiring harness..... 544
11.19 USB C type adaptor..... 544
11.20 Horn Dismantling..... 545
11.21 Ambient temperature sensor..... 545
11.22 License plate illuminator..... 545
11.23 Rear Trafficator..... 546
11.24 Ignition Switch Cum Steering Lock..... 547
11.25 TFT Instrument Cluster..... 548
11.26 Front Trafficators RH..... 549
11.27 Front Trafficators LH..... 549
11.28 Headlamp..... 550
11.29 Starter relay with cable..... 550
11.30 Electronic flasher..... 552
11.31 RR Unit..... 552
11.32 Battery Assembly..... 553
ELECTRICAL SCHEMATIC..... 555
ECM & SPARK DELIVERY SYSTEM..... 556
LIGHTING SYSTEM..... 557
STARTING SYSTEM..... 558
COMPLETE SCHEMATIC - DOMESTIC/EUROPE..... 559
ABS - SYSTEM..... 572
ACCESSORY SYSTEM..... 573
CHARGING SYSTEM..... 574
HORN SYSTEM..... 575
IGNITION ,STARTING AND CHARGING SYSTEM..... 576
SIGNALLING SYSTEM..... 577

11.Electrical System

11.1 Battery Dismantling

- Remove the Seat assembly.
- Ensure Ignition and stop switch are in OFF position before disconnecting battery cables.

NOTE
• *If battery lead is difficult to disconnect due to rust or corrosion of battery terminals, pour recommended battery terminal cleaning solution on terminals and then try to disconnect.*

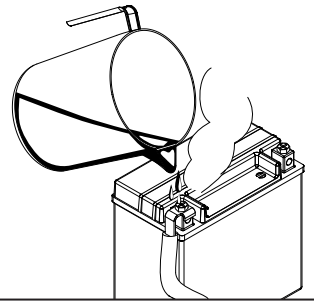

Fig. 11.5.1

- Switch "OFF" the engine and remove ignition key from the key barrel.

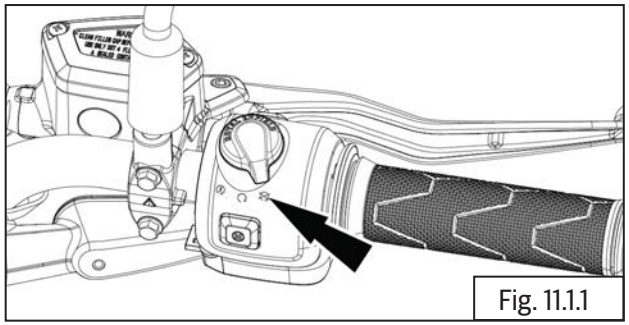

Fig. 11.1.1

- Disconnect the negative (- ve) coupler **(a)**.

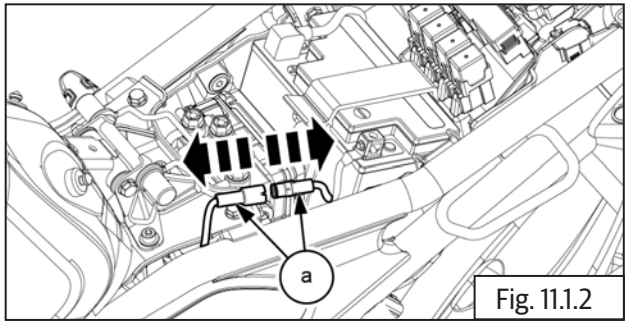

Fig. 11.1.2

- Disconnect battery negative (- ve) terminal bolt **(a)**.

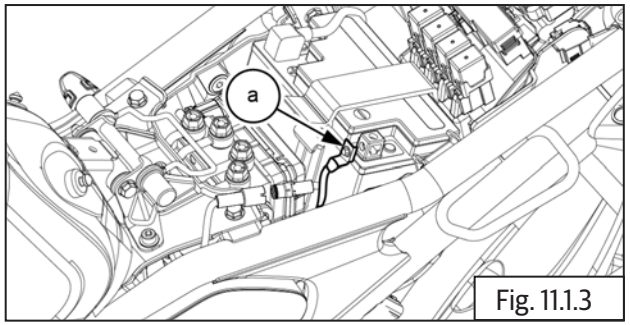

Fig. 11.1.3

	10 mm Socket with Ratchet

- Disconnect battery positive (+ ve) terminal bolt **(a)**.

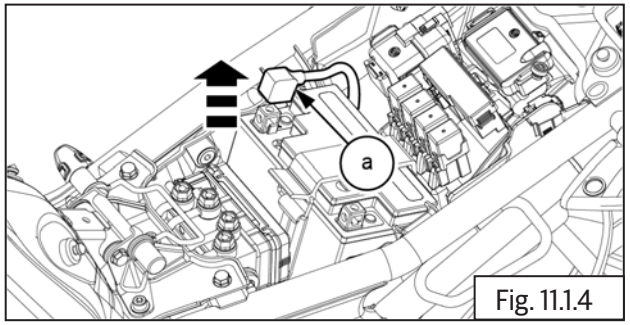

Fig. 11.1.4

	10 mm Socket with Ratchet

- Pull battery strap (belt) **(a)** downwards and release strap lock from battery strap bracket.

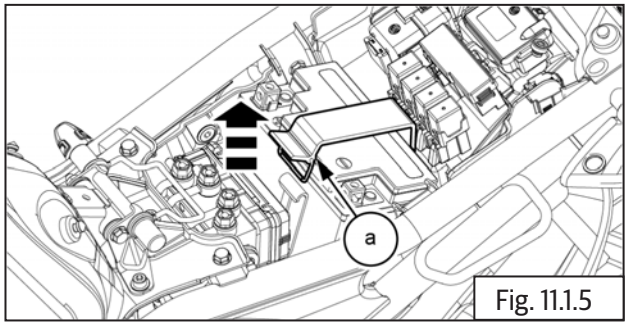

Fig. 11.1.5

- Remove battery **(a)** from tray.

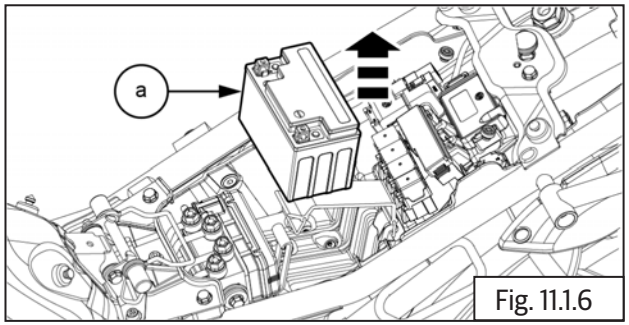

Fig. 11.1.6

11.2 RR Unit

- Disconnect 2 Nos electrical connector **(a)** from RR unit .

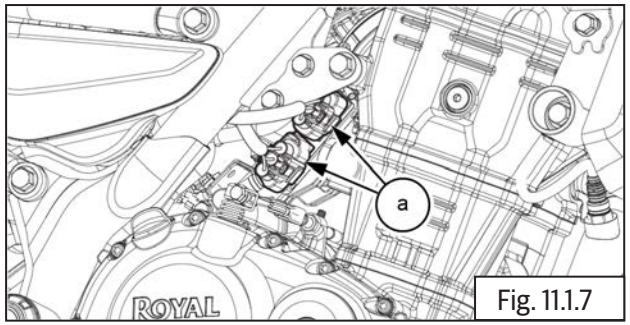

Fig. 11.1.7

- Loosen and remove Hex flange head bolts 2 Nos **(M6) (a)** from RR unit bracket .

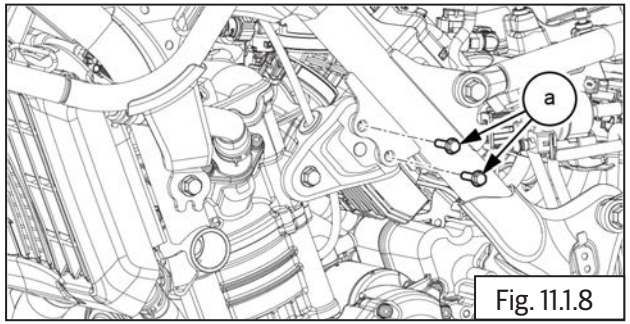

Fig. 11.1.8

	12 mm Socket with Ratchet

- Loosen and remove Hex flange head bolt 1 Nos **(M10) (a)** from RR unit bracket .

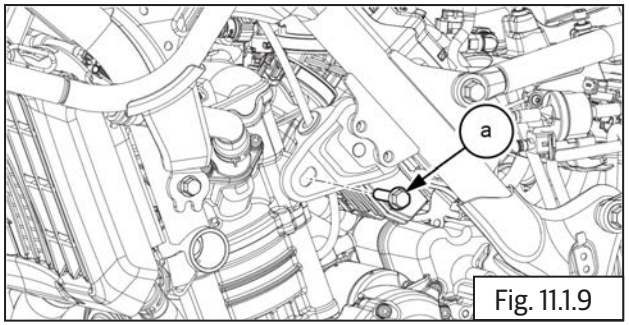

Fig. 11.1.9

	14 mm Socket with Ratchet

- Remove RR unit **(a)** with bracket.

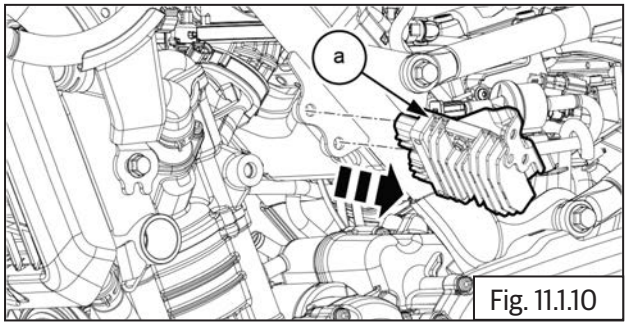

Fig. 11.1.10

- Loosen and remove Hex flange head nuts 2 Nos **(M6) (a)** from RR unit.
- Remove RR unit **(b)** from bracket **(c)**.

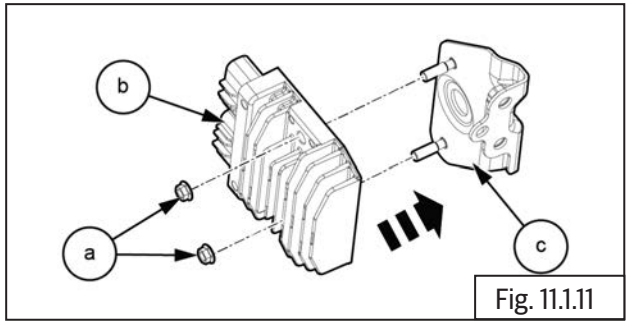

Fig. 11.1.11

11.3 Electronic flasher

- Disconnect the flasher coupler **(a)**.

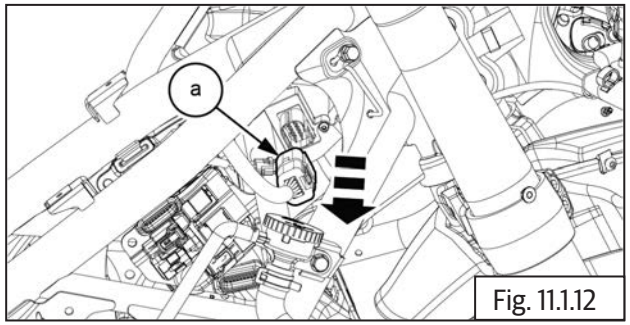

Fig. 11.1.12

- Loosen and remove 2 Nos screws **(a)** from Electronic flasher.

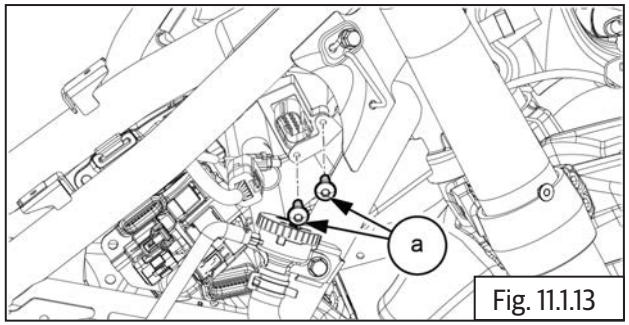

Fig. 11.1.13

	T20 Torx socket with Ratchet

- Remove the flasher **(a)** from chassis frame.

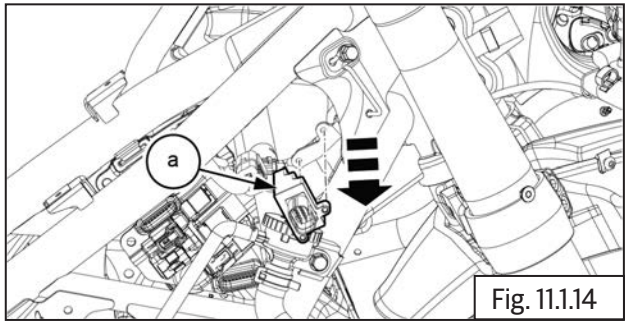

Fig. 11.1.14

11.4 Starter relay with cable

- Disconnect the starter relay coupler **(a)**.

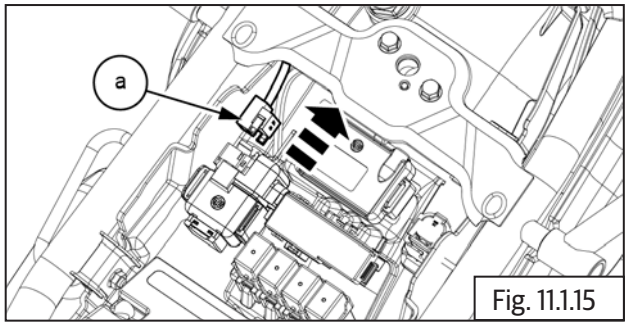

Fig. 11.1.15

- Open the cap **(a)** from the relay.

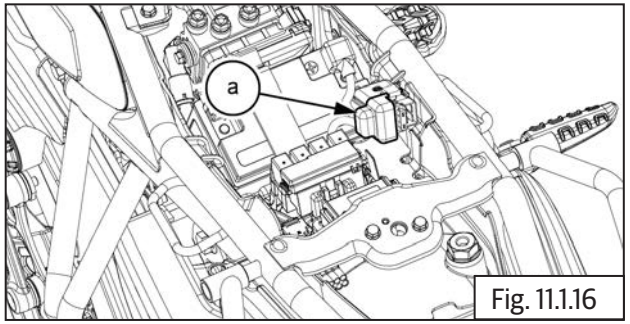

Fig. 11.1.16

- Remove the starter relay **(a)** from the slot.

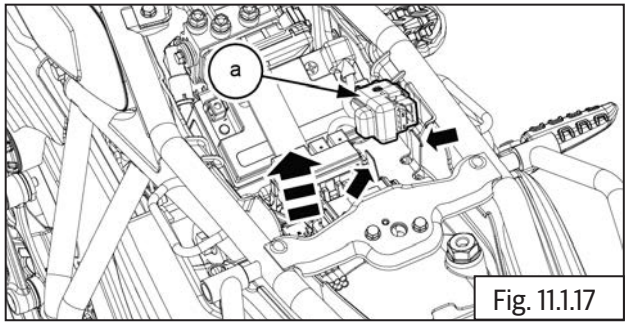

Fig. 11.1.17

- Remove the 2 Nos screws **(a)** from the main cable.

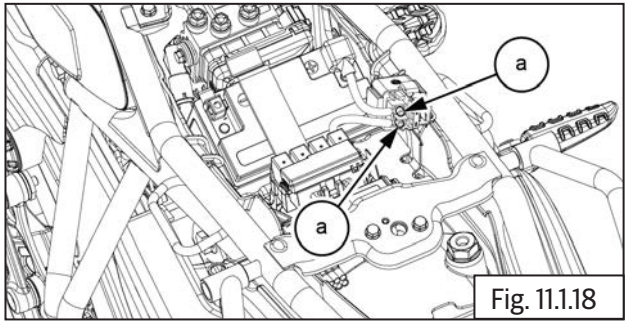

Fig. 11.1.18

	4 mm allen key with rachet

- Remove the battery main cables **(a)** from relay.

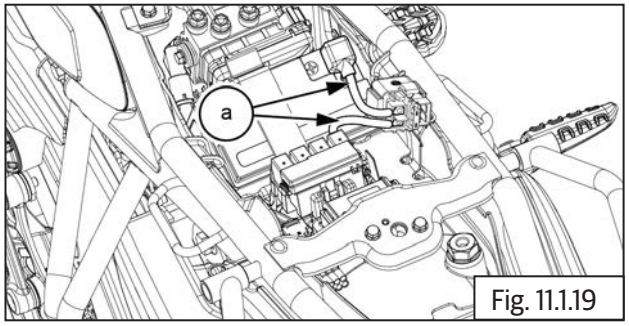

Fig. 11.1.19

- Remove the starter relay **(a)** from battery tray,

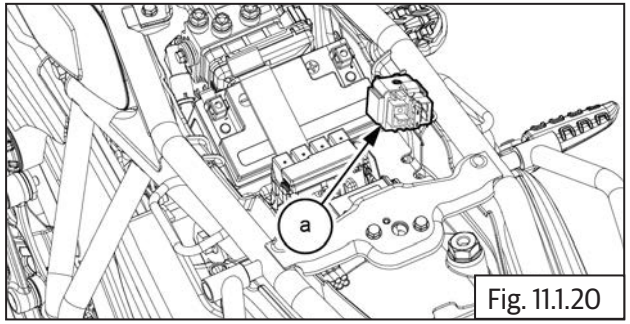

Fig. 11.1.20

- Loosen and remove the nut **(a)** from self motor and remove the main cable.

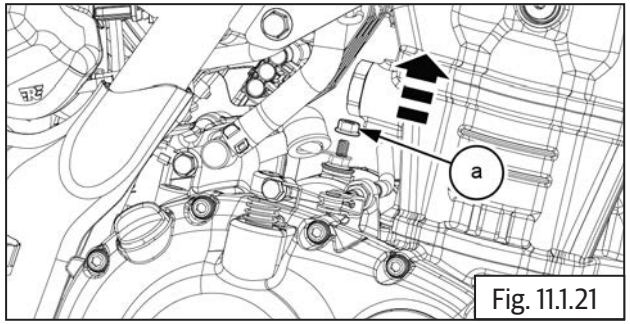

Fig. 11.1.21

	10 mm Socket with Ratchet

- Remove the 5 Nos wire tags **(a)** from the battery tray.
- Remove the main cable from battery tray.

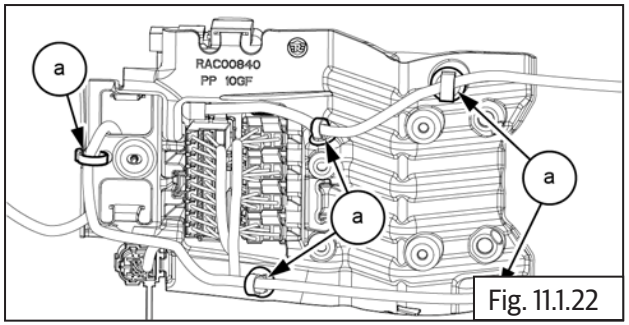

Fig. 11.1.22

11.5 Headlamp Dismantling

NOTE
• *Ensure ignition switch and stop switch in off condition.*

⚠ **CAUTION**
Support the Headlamp assembly carefully.

- Gently loosen and remove the head light beam adjustment screw **(a)**.

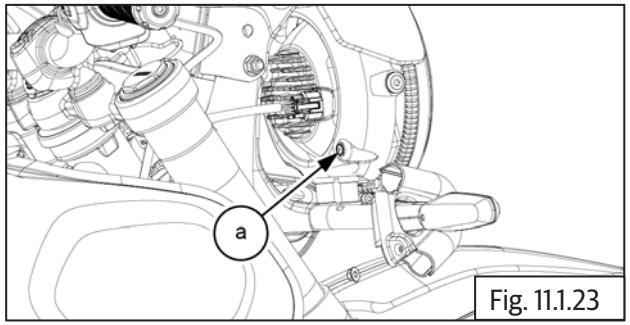

Fig. 11.1.23

	4 mm allen key with ratchet

- Disconnect head lamp coupler **(a)**.

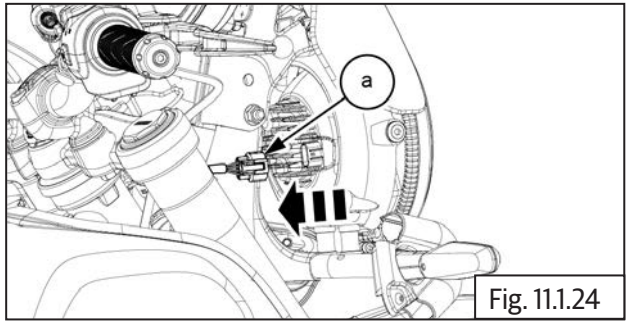

Fig. 11.1.24

- Gently loosen and remove the LH & RH **(a)** side head lamp holder.

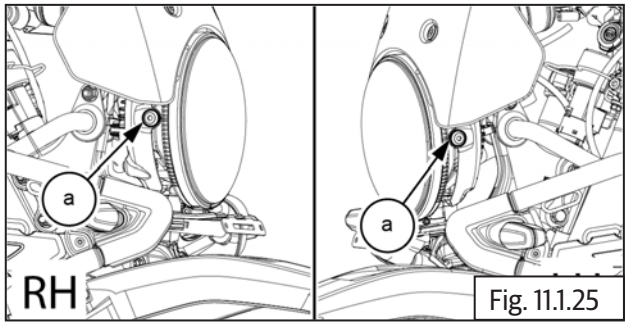

Fig. 11.1.25

	4 mm Allen key with ratchet

- Remove the head lamp assembly **(a)**.

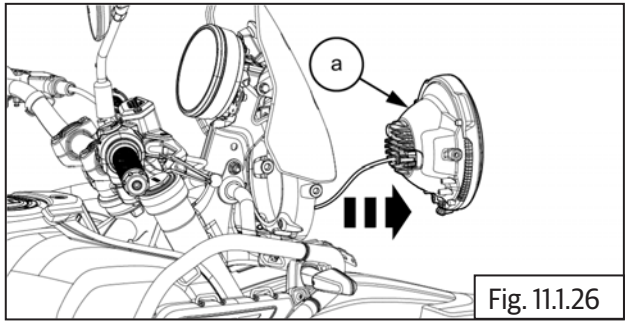

Fig. 11.1.26

NOTE
• The headlamp has a LED lighting system. In the event of failure, the headlamp LED assembly should be replaced.

11.6 Front Trafficators LH

- Remove the retainer clip **(a)** from trafficator LH.

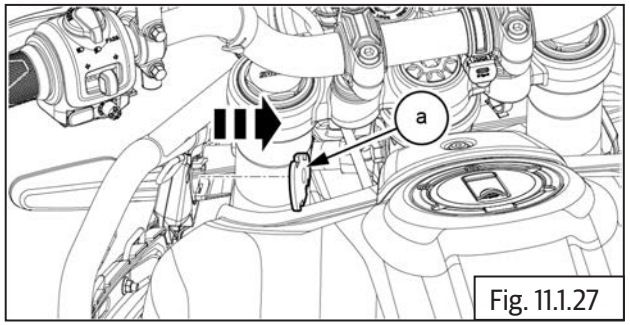

Fig. 11.1.27

	Screw driver

- Disconnect the trafficator coupler **(a)** .

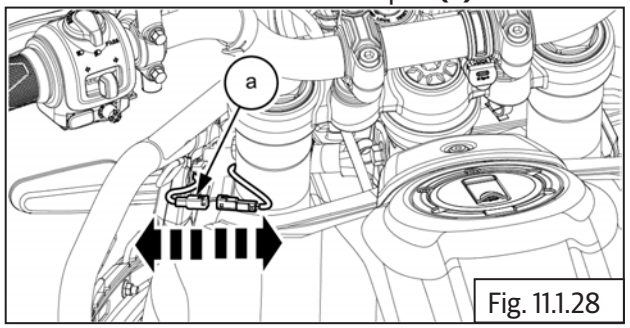

Fig. 11.1.28

- Gently Pull out and remove the front trafficator LH **(a)** from LH side bar.

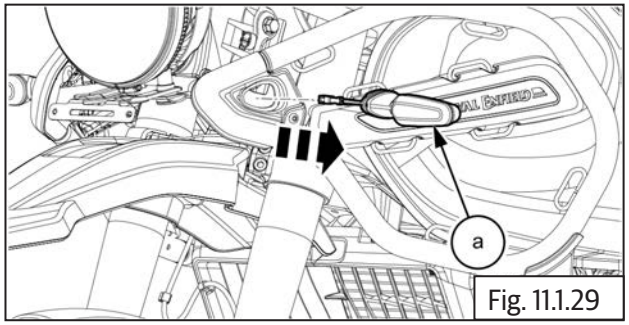

Fig. 11.1.29

11.7 Front Trafficators RH

- Remove the retainer clip **(a)** from trafficator RH.

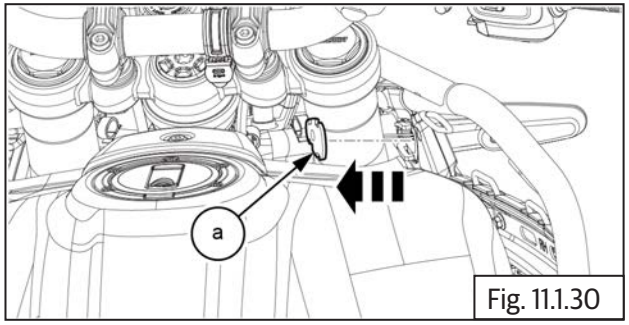

Fig. 11.1.30

	Screw driver

- Disconnect electrical coupler **(a)**.

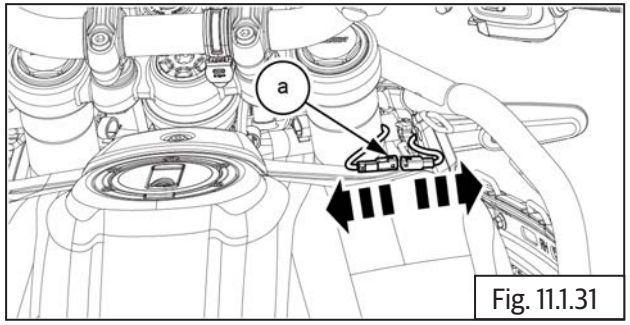

Fig. 11.1.31

- Gently pull out and remove front trafficator RH **(a)** from RH side bar.

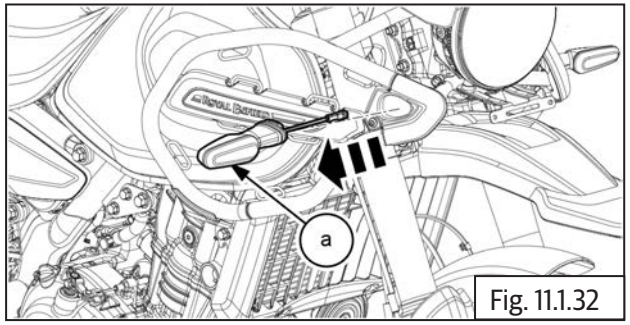

Fig. 11.1.32

11.8 TFT Instrument Cluster

- Loosen and remove **4 Nos** button head screws **(M6) (a)** from windscreen.

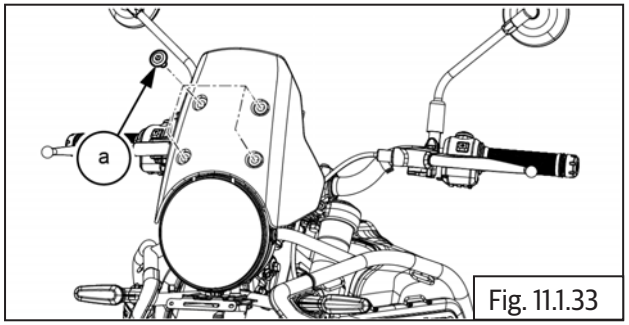

Fig. 11.1.33

	5mm Allen socket with ratchet

- Remove windscreen **(a)** from windscreen mount.

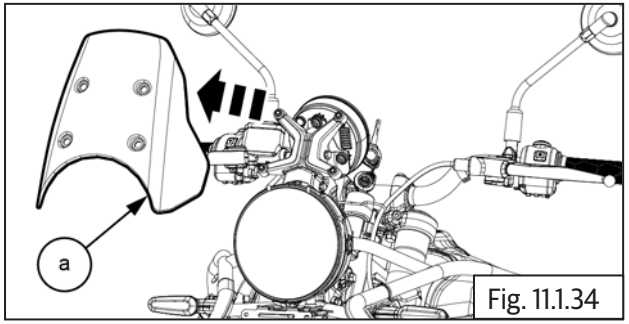

Fig. 11.1.34

- Loosen and remove **3 Nos** button head screws **(M6) (a)** from TFT cluster.

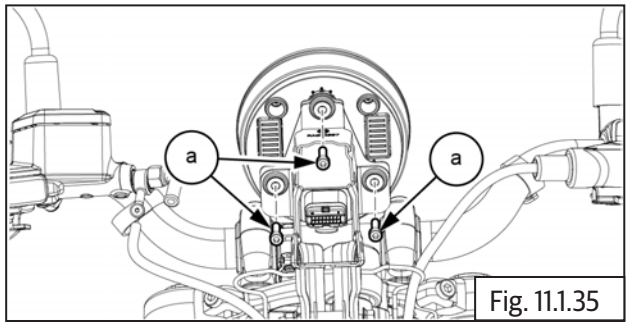

Fig. 11.1.35

	4mm Allen socket with ratchet

- Disconnect the TFT cluster coupler **(a)**.

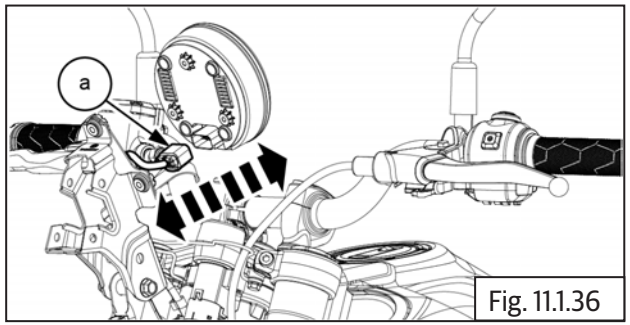

Fig. 11.1.36

- Remove the TFT cluster **(a)** from top bracket.

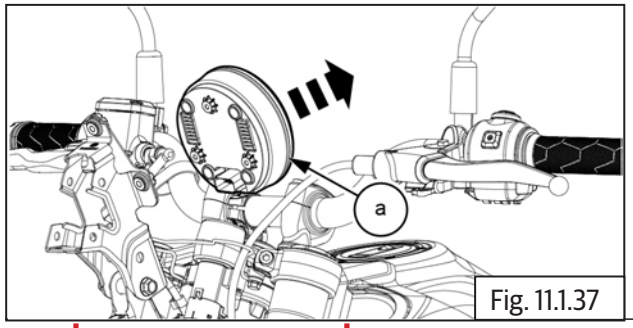

Fig. 11.1.37

11.9 Ignition Switch Cum Steering Lock

- Remove the fuel tank.
- Loosen and remove hex head flange bolt **(M6)**.
- Remove harness clip **(a)** from RHS chassis frame.

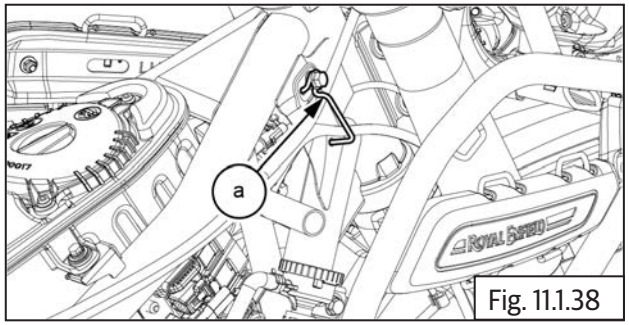

Fig. 11.1.38

	10 mm Socket with Ratchet

- Slightly pullout the RH connector holder to access the coupler.
- Disconnect the ignition switch coupler **(a)**.

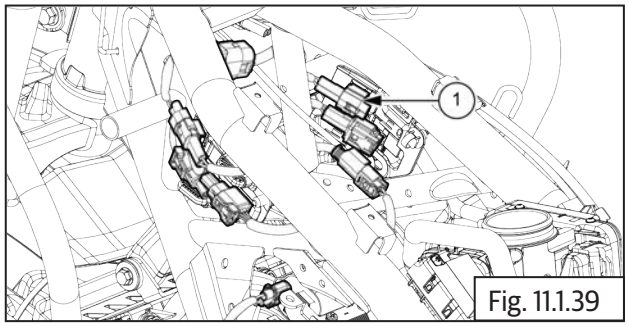

Fig. 11.1.39

- Remove 2 Nos. cap bolts **(M6) (a)** located below key set.

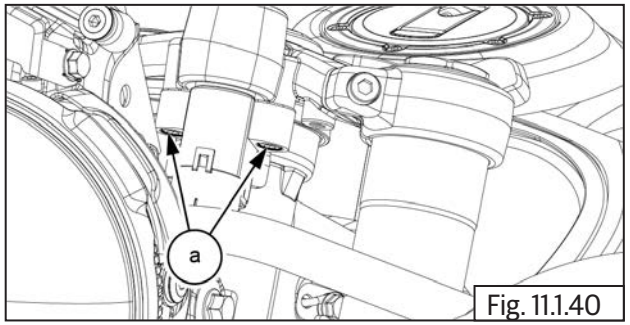

Fig. 11.1.40

	5 mm Allen socket with Ratchet

- Gently remove ignition key set **(a)**.

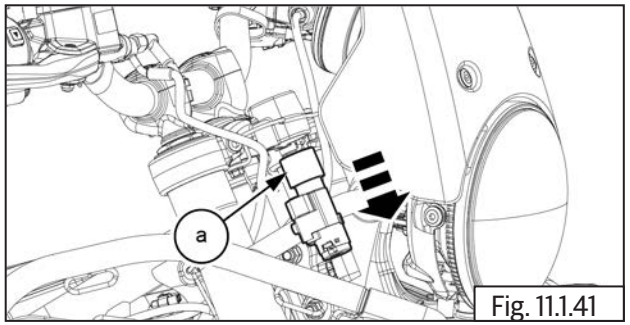

Fig. 11.1.41

11.10 Rear Trafficator

- Loosen and remove 2 Nos button head bolts **(M5) (a)** from rear mudguard.

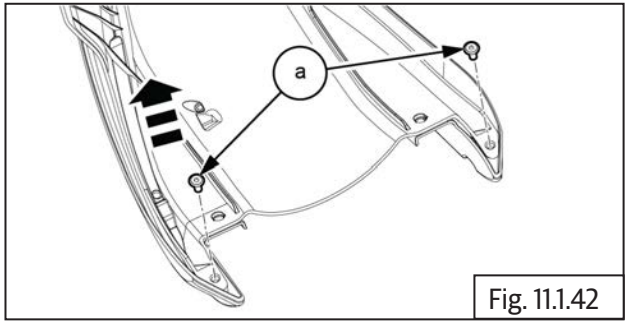

Fig. 11.1.42

	4 mm Allen socket with Ratchet

- Remove rear mudguard **(a)** from number plate hanger.

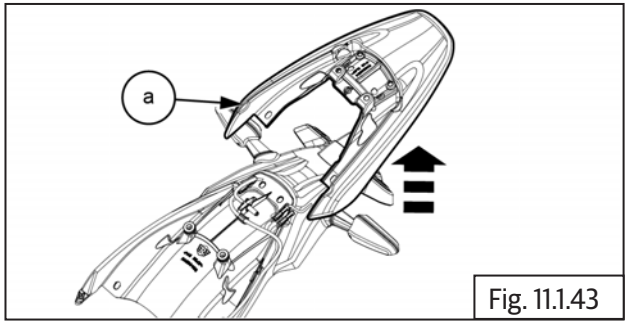

Fig. 11.1.43

- Loosen and remove 2 Nos hex head bolts **(M6) (a)** from cover.

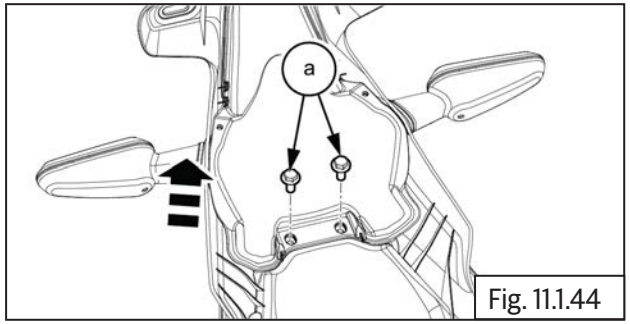

Fig. 11.1.44

	10 mm socket with Ratchet

- Loosen and remove 2 Nos screws **(a)** from cover.

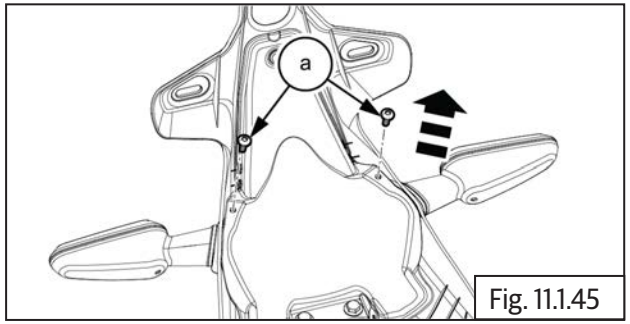

Fig. 11.1.45

	T20 Torx socket with Ratchet

- Loosen and remove button head bolt **(M5) (a)** from cover.

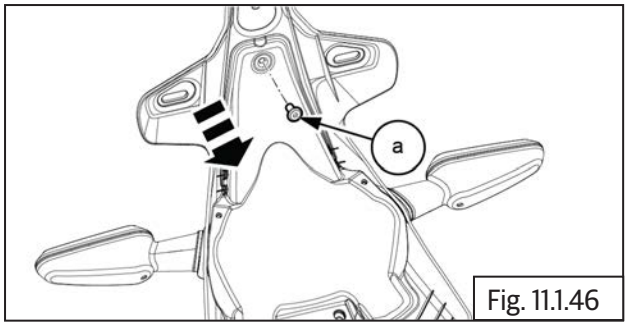

Fig. 11.1.46

	4 mm Allen socket with Ratchet

- Remove the cover **(a)** from rear mudguard .

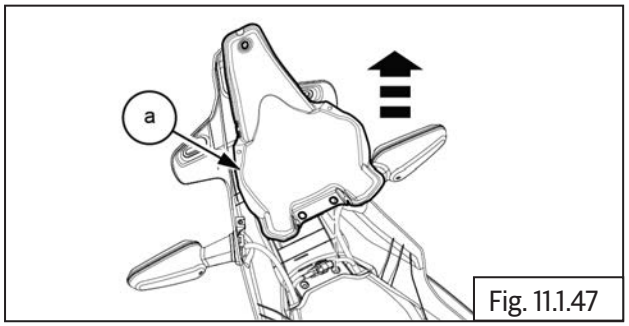

Fig. 11.1.47

- Disconnect LHS and RHS trafficator connector **(a)** and **(b)**.

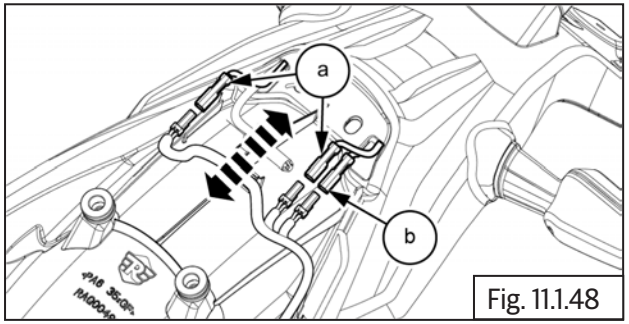

Fig. 11.1.48

- Remove end cap **(a)** from trafficator.

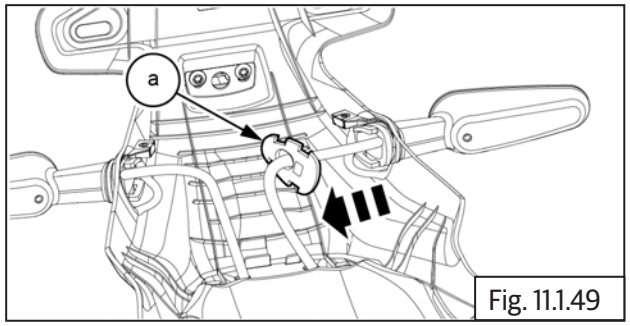

Fig. 11.1.49

- Gently Pull out and remove the rear trafficator **(a)**.

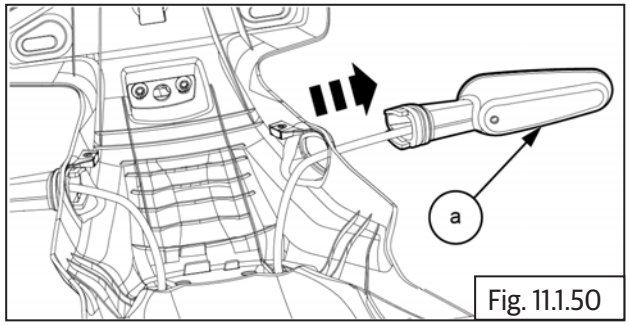

Fig. 11.1.50

Repeat the same procedure to LHS trafficator.

11.11 License plate illuminator

- Disconnect license plate illuminator connector **(b)**.

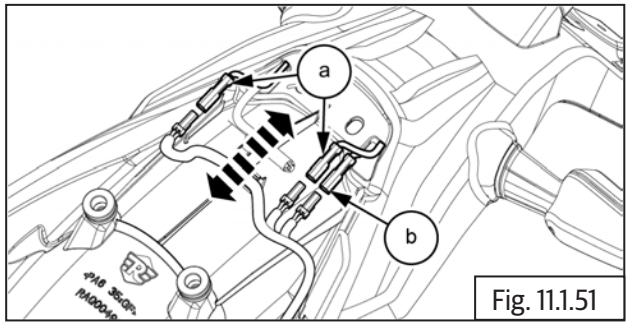

Fig. 11.1.51

- Loosen and remove 2 Nos button head screws **(M5) (a)** from license plate illuminator.

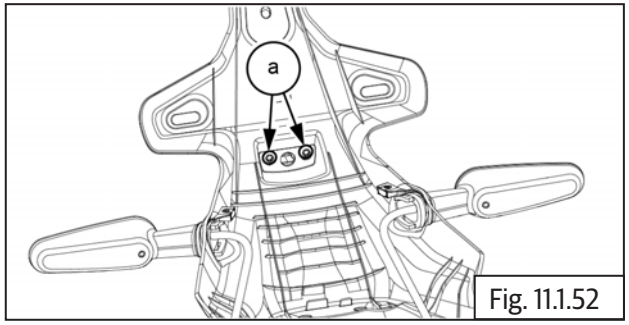

Fig. 11.1.52

	4 mm Allen socket with Ratchet

- Remove the license plate illuminator **(a)** from rear mudguard.

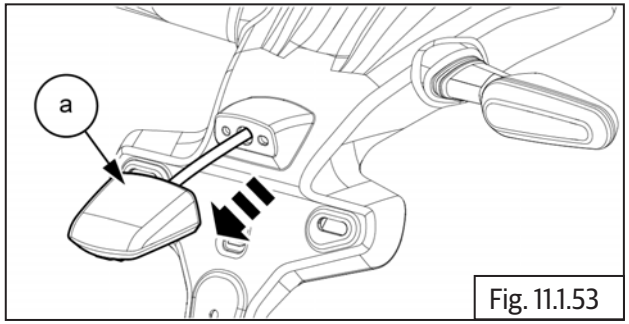

Fig. 11.1.53

11.12 Ambient temperature sensor

- Disconnect ambient temperature sensor coupler **(a)**.

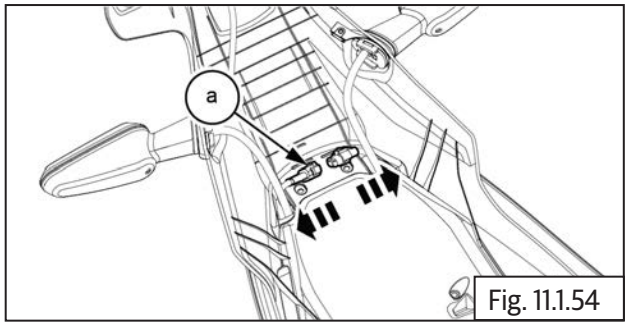

Fig. 11.1.54

- Remove ambient temperature sensor **(a)** from rear mudguard.

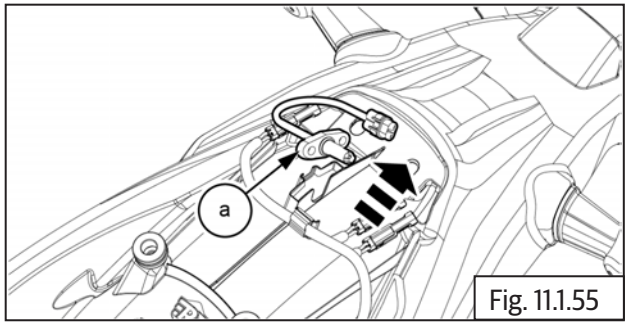

Fig. 11.1.55

11.13 Horn Dismantling

- Disconnect coupler **(a)** from horn.

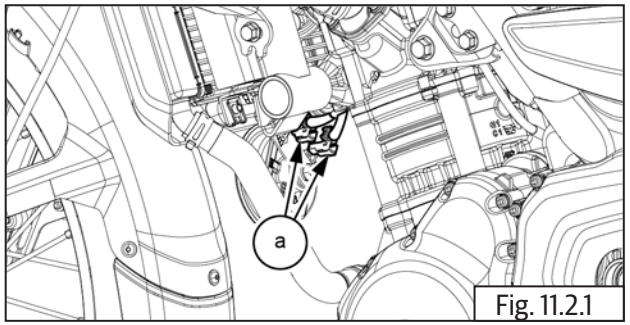

Fig. 11.2.1

- Loosen and remove Hex flange bolt and nut **(M8) (a)** to remove horn with bracket **(b)**.

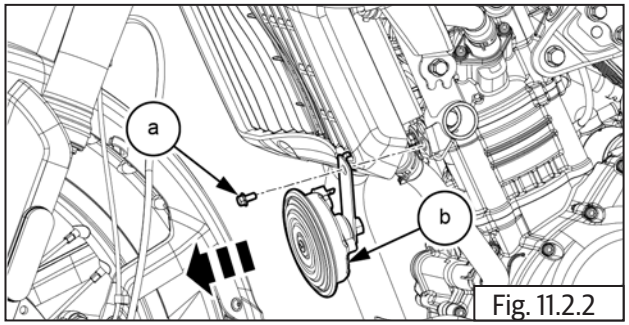

Fig. 11.2.2

	12 mm Socket with Ratchet

11.14 USB C type adaptor

- Loosen and remove cap bolt **(M4) (a)** from USB mount.

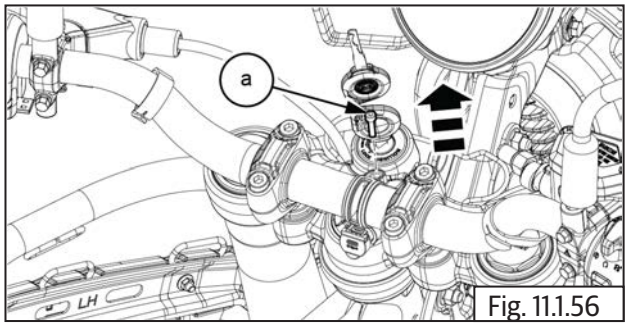

Fig. 11.1.56

	3 mm Allen socket with Ratchet

- Disconnect the USB coupler **(a).**

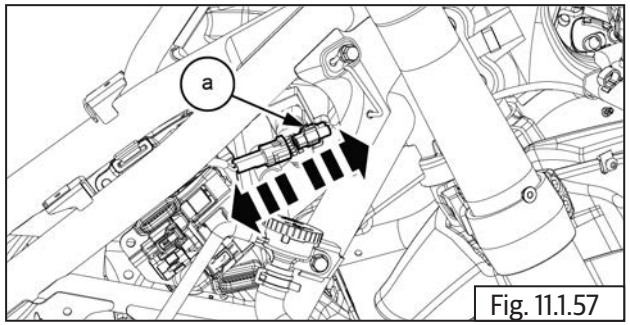

Fig. 11.1.57

- Reomve the USB and mount **(a)** from handle bar.

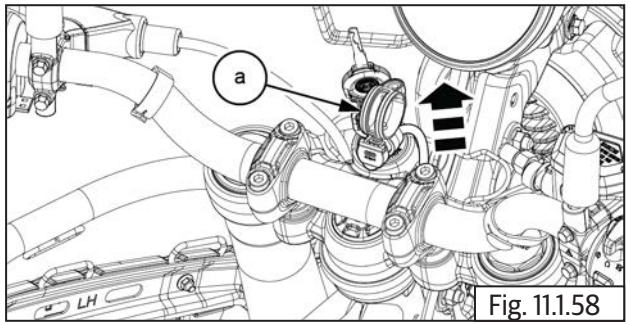

Fig. 11.1.58

- Detach the USB **(a)** from mount **(b)**.

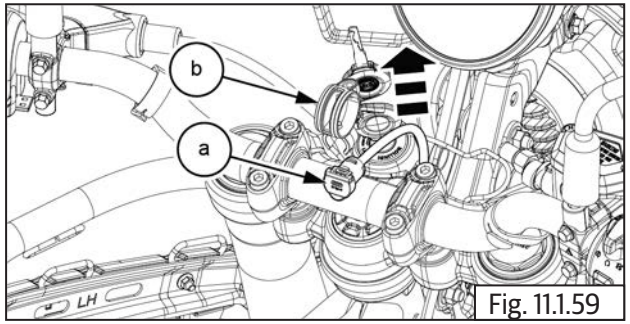

Fig. 11.1.59

11.15 Rear wiring harness

- Remove 2 Nos cable holder clips **(a)** from wiring harness.
- Detach the wire tag from wiring harness.

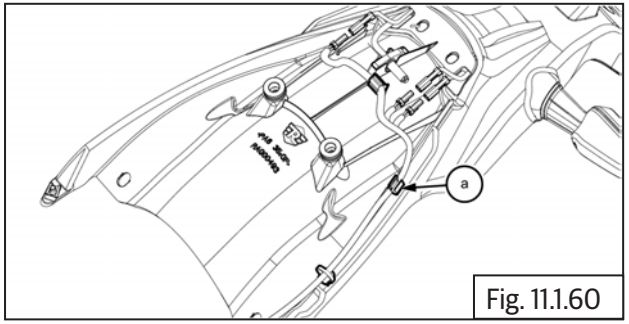

Fig. 11.1.60

- Remove wiring harness **(a)** from rear mudguard.

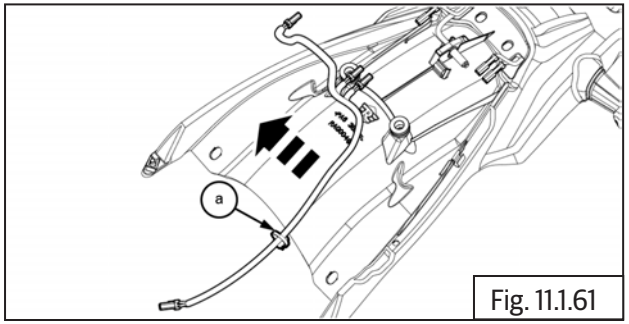

Fig. 11.1.61

11.16 Complete Wiring Harness Removal

- Remove the following parts:
- Remove the fuel tank.
- Remove the air filter.
- LHS and RHS side panels.

- Disconnect the Headlamp coupler **(a)**

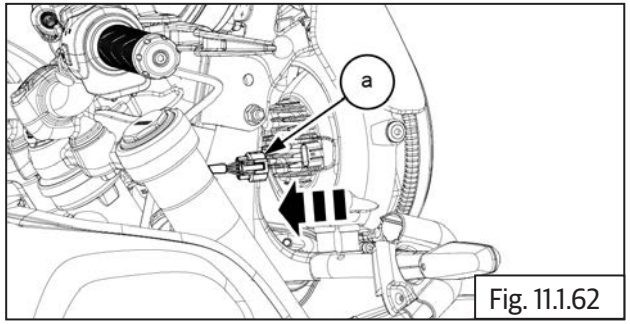

Fig. 11.1.62

- Disconnect the cluster coupler **(a)**.

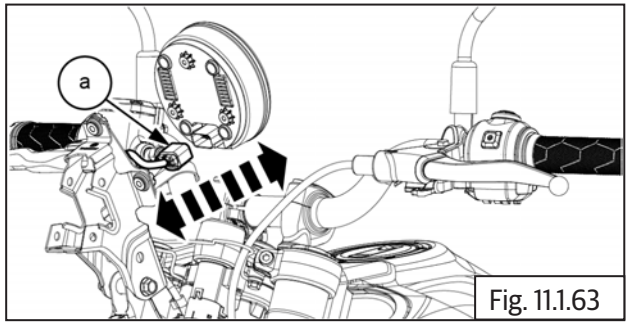

Fig. 11.1.63

- Disconnect the **2 Nos** ignition coil couplers **(a)**.

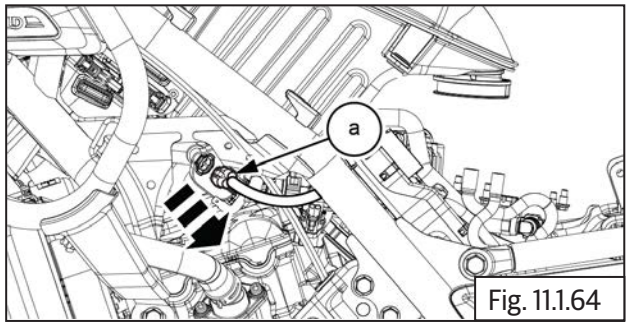

Fig. 11.1.64

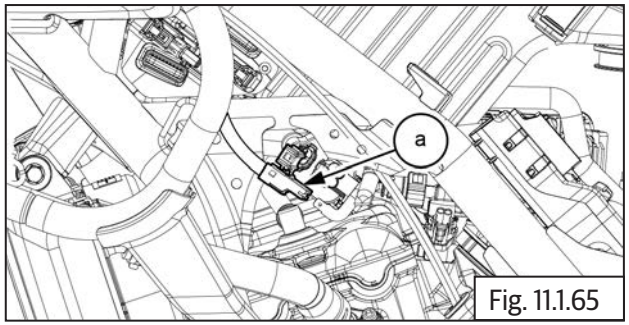

Fig. 11.1.65

- Disconnect the front brake pressure switch connector **(a)**.

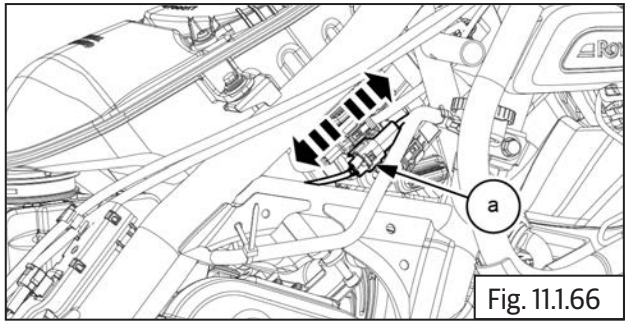

Fig. 11.1.66

- Disconnect rear brake pressure switch coupler **(a)**.

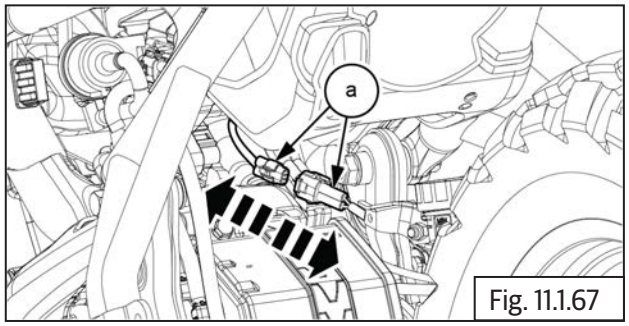

Fig. 11.1.67

- Disconnect the ABS modulator coupler.

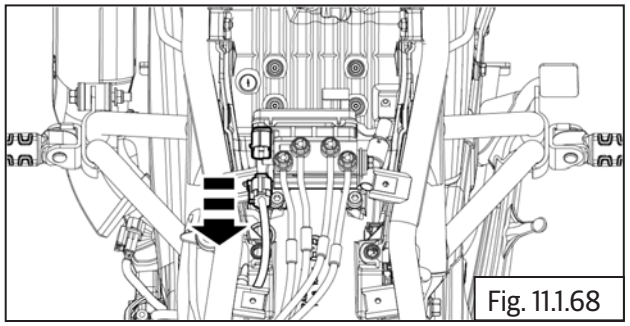
Fig. 11.1.68

- Disconnect the Front ABS sensor coupler **(a)** from near RHS air filter.

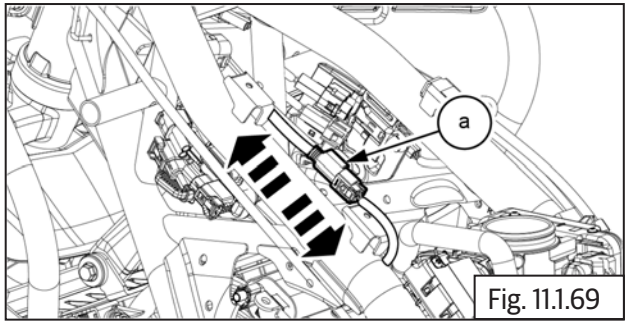

Fig. 11.1.69

- Remove ABS sensor coupler from rear RHS frame.

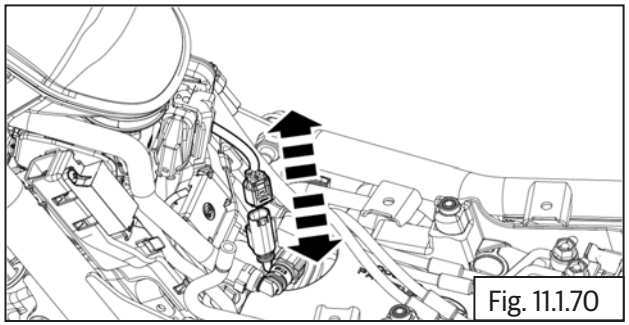
Fig. 11.1.70

- Disconnect the cooling fan coupler **(a)**.

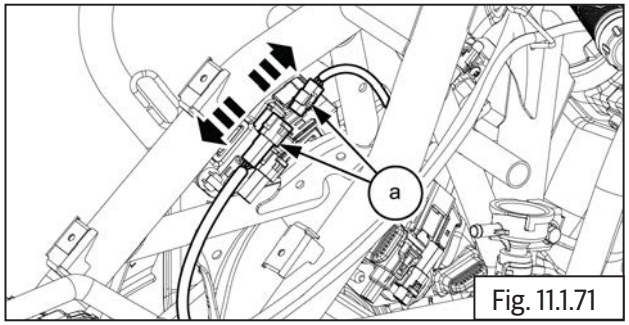

Fig. 11.1.71

- Coolant temperature sensor located on rear side of cylinder head.
- Remove coolant temperature sensor coupler **(a)**.

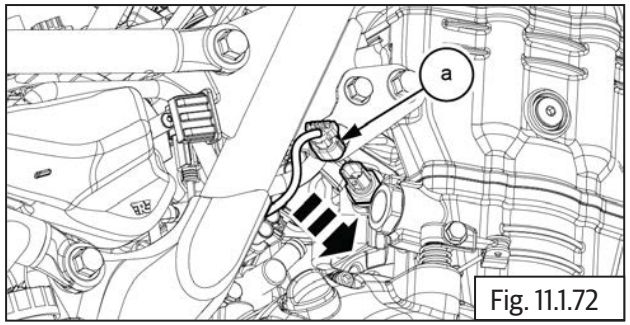

Fig. 11.1.72

- ECU is located on the throttle body assembly.

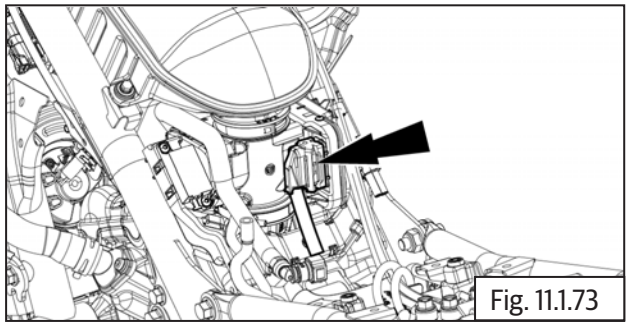
Fig. 11.1.73

- Disconnect coupler from ECU.

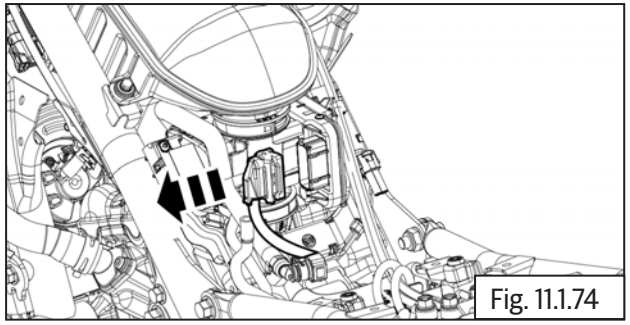
Fig. 11.1.74

- Disconnect the oil pressure switch coupler **(a).**

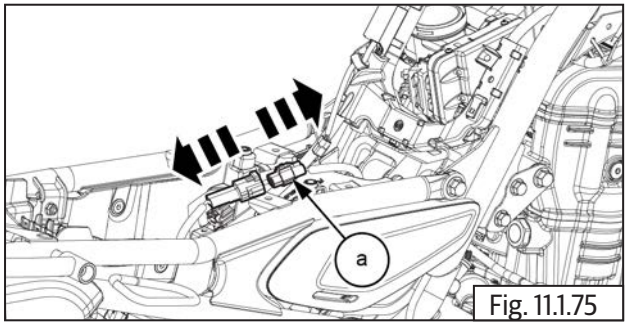

Fig. 11.1.75

- Disconnect below listed couplers from LH bottom battery tray.
- **1. Side stand switch**
- **2. Gear position sensor**
- **3. Crank position sensor**
- **4. Purge valve**
- **5.Charger Module**

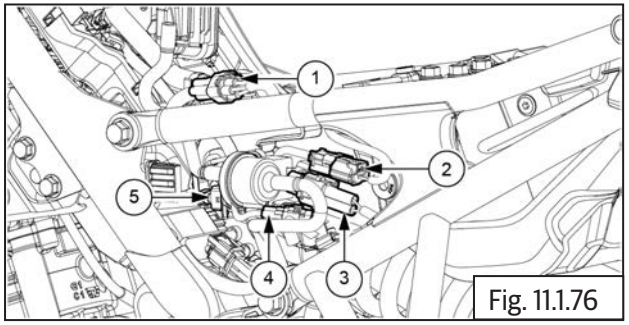

Fig. 11.1.76

- Disconnect below listed couplers from outside LH & RH connector holders.
- **1. Flasher Unit.**
- **2.Accessories coupler**
- **3 & 4. LH switch cube coupler 2Nos.**
- **5 . Ignition coil.**
- **6.Ignition key set coupler**
- **7. O2 Sensor**
- **8. Front wheel speed Sensor**

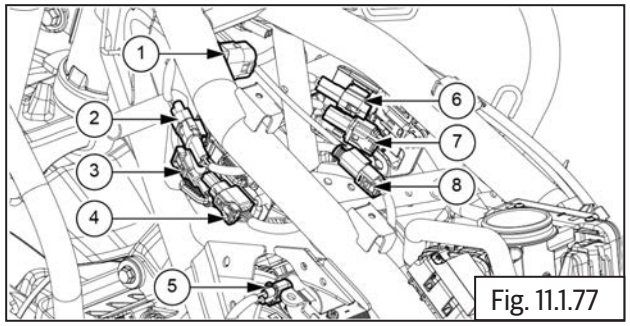

Fig. 11.1.77

- Disconnect below listed couplers from outside RH connector holder.
- **1. Fuel level sensor coupler**
- **2 & 3. RH switch cube coupler 2Nos.**
- **4.Throttle sensor coupler.**

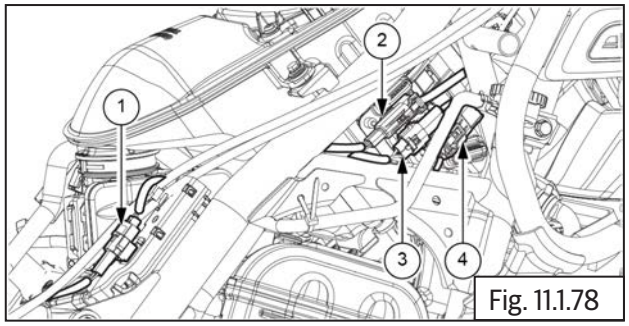

Fig. 11.1.78

- Disconnect below listed couplers from inside LH connector holder.
- **1. Cooling fan coupler**
- **2 Clutch switch.**
- **3.USP port coupler.**

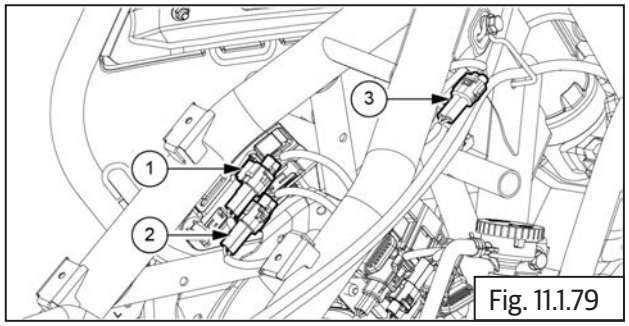

Fig. 11.1.79

- Remove the telematics control unit **(a)** from rubber boot.

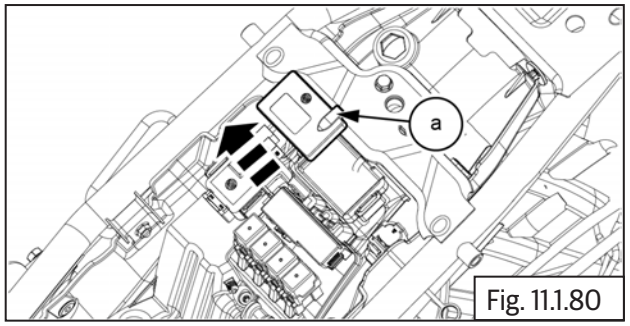

Fig. 11.1.80

- Remove the rubber boot **(a)** from battery tray.

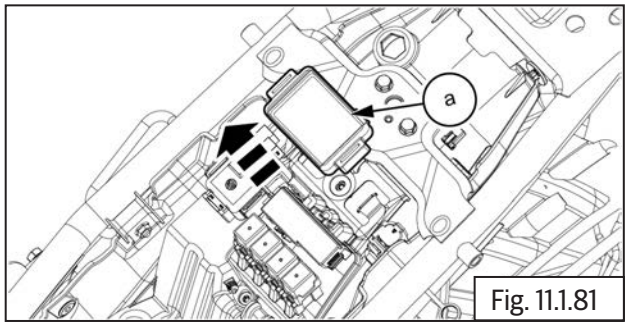

Fig. 11.1.81

- Loosen and Remove 7Nos screws **(a)** with washers **(b)** from battery tray.

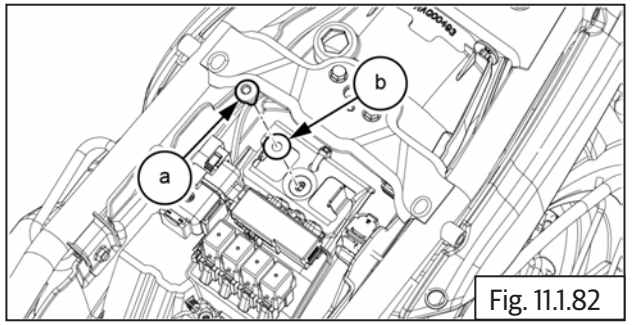

Fig. 11.1.82

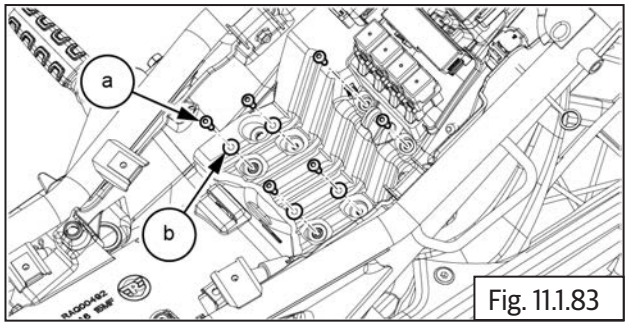

Fig. 11.1.83

	T20 Torx socket with Ratchet

- Slide and move the battery tray with relay holders **(a)**

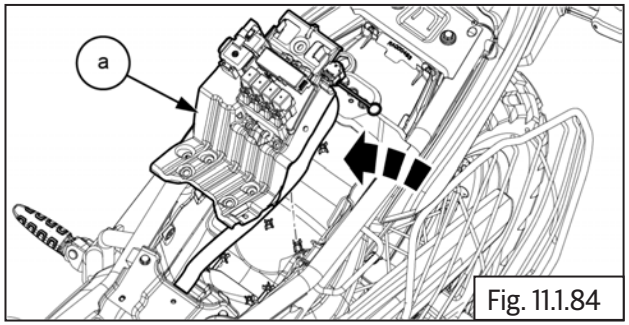

Fig. 11.1.84

- Remove OBD coupler **(1)** from battery tray.
- Release the lock and detach the fuse with holders **(2)** from battery tray.
- Remove starter relay **(3)** from battery tray.
- Release the lock and detach the relay with holders **(4)** from battery tray.

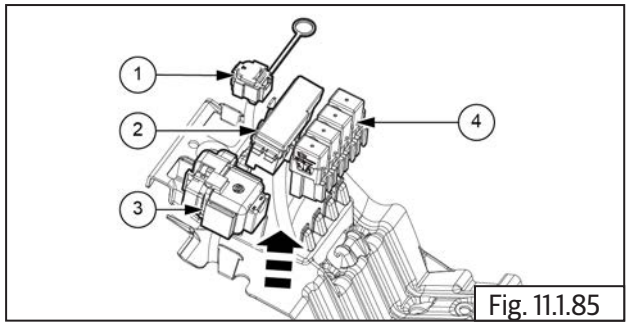

Fig. 11.1.85

- Remove the wire tag and clips **(a)** from main battery and wiring harness.

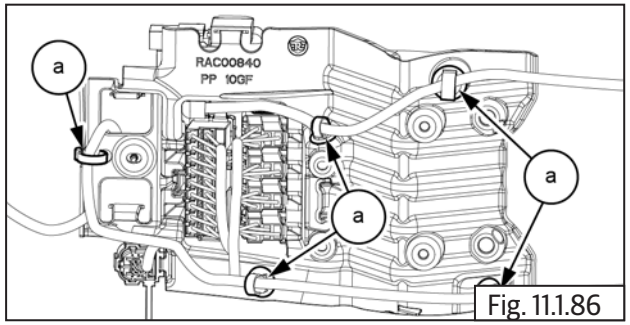

Fig. 11.1.86

- Remove the battery tray **(a)** from wiring harness.

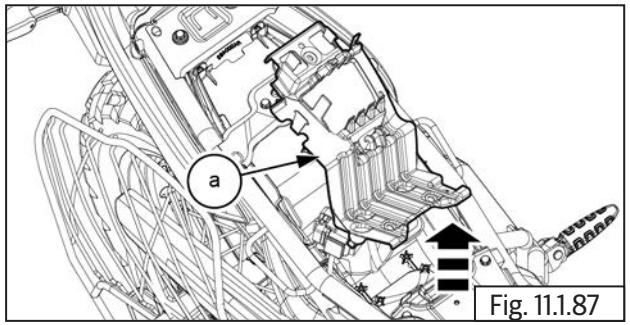

Fig. 11.1.87

- Loosen and Remove 2Nos screws **(a)** from charger module.

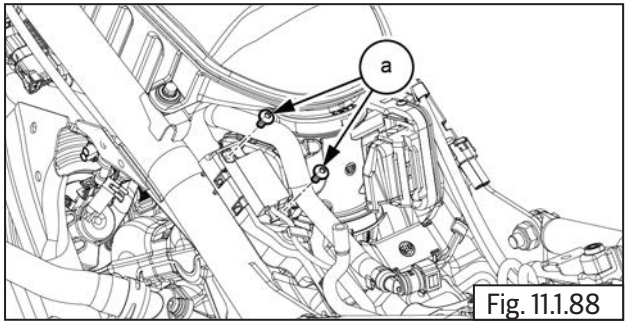

Fig. 11.1.88

	T20 Torx socket with Ratchet

- Remove charger module **(a)** from conduit cover.

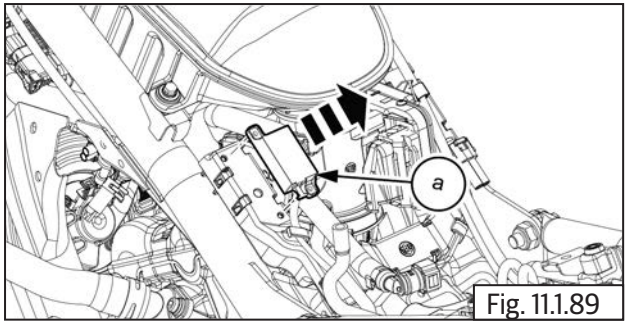

Fig. 11.1.89

- Remove 2Nos wire tags **(a)** from conduit cover.

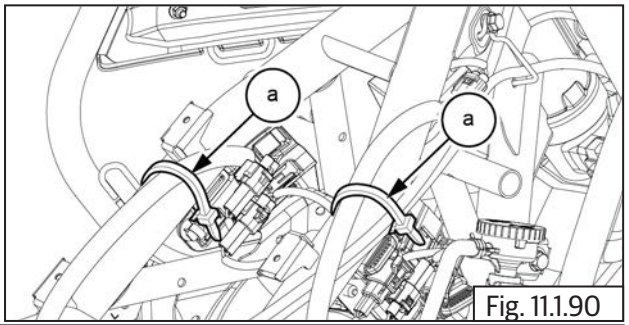

Fig. 11.1.90

- Release the lock and open the top conduit cover **(a)**.

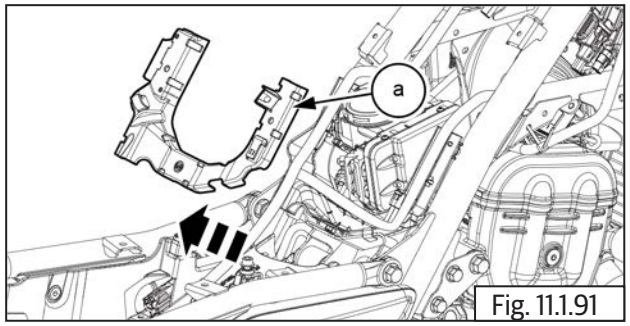

Fig. 11.1.91

- Remove the bottom conduit cover **(a)**.

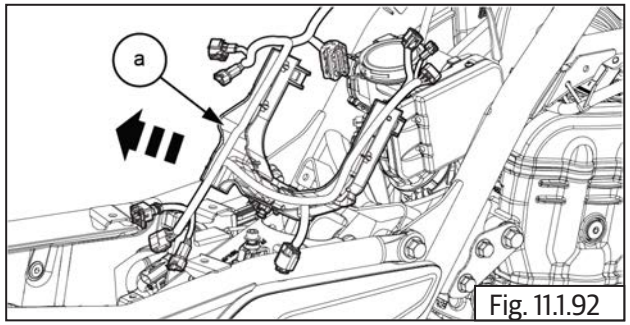

Fig. 11.1.92

- Remove the wiring harness from chassis frame **(a)**.

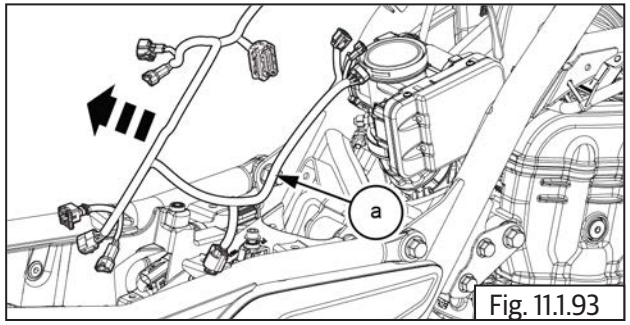

Fig. 11.1.93

Inspection

- Inspect connector pins for any bends, corrosions and damages.
- Inspect headlamp holder for any scratches, rust, cracks and damages. Replace if it is defective.
- Inspect and replace reflector if it has any damages and/or distraction.
- Inspect if wire clips are loosened and tighten appropriately.
- Inspect if headlamp holder bolt is loosened and tighten appropriately.
- Inspect the trafficators bulb filament for any damages and replace.

Battery

- Check battery for any damages.
- Check the battery terminals for sulfating, corrosion or damages.
- Test voltage level. It should be 12.8V to 13.2V approximately.

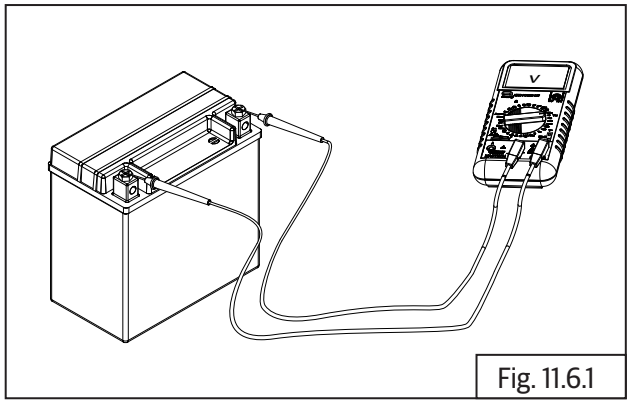

Fig. 11.6.1

Assembly

11.17. Complete Wiring Harness Installation

- Locate and align the wiring harness **(a)** to the chassis frame.

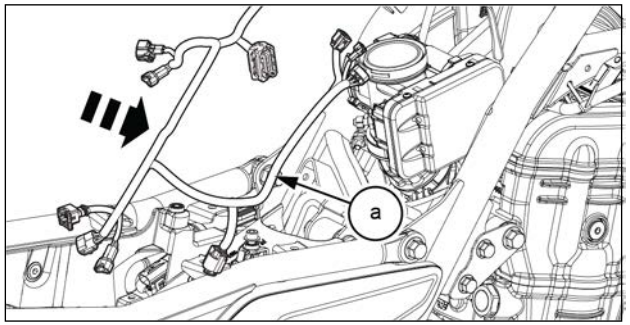

- Locate and fix the bottom conduit cover **(a)**.

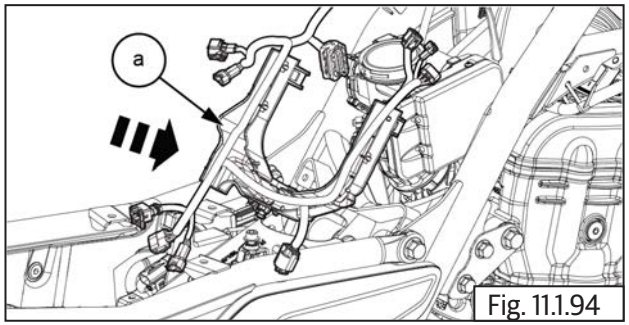

Fig. 11.1.94

- Close the top conduit cover **(a)** and secure the lock.

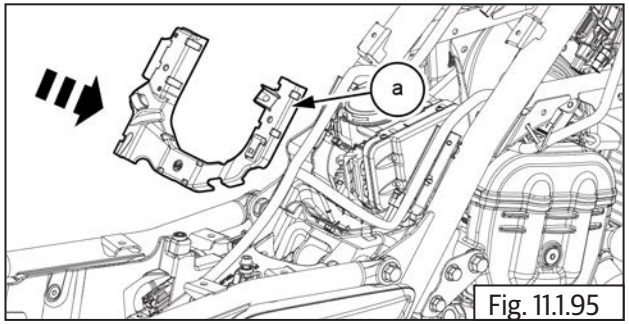

Fig. 11.1.95

- Fix the 2Nos wire tags **(a)** to the conduit cover.

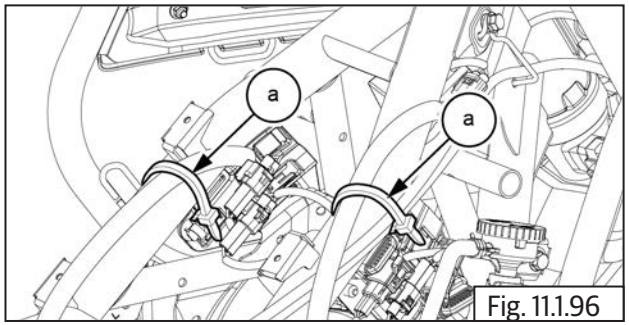

Fig. 11.1.96

- Locate the USB charger module on top conduit cover.

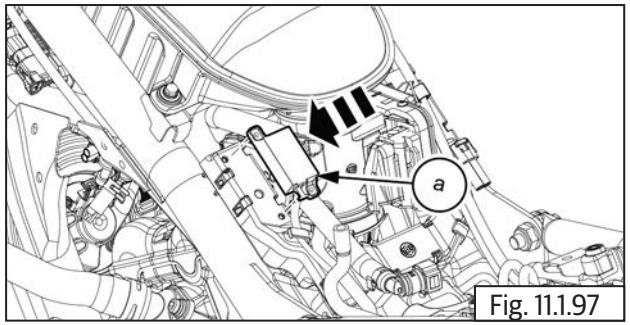

Fig. 11.1.97

- Locate and tighten 2Nos screws **(a)** on USB charger module.

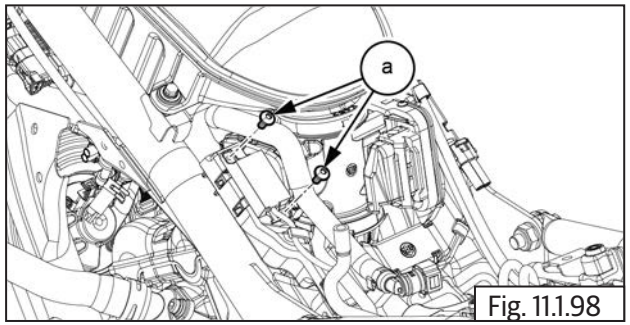

Fig. 11.1.98

	T20 Trox socket with ratchet
Torque	3 N-m / 0.3 kgf-m

⚠ CAUTION

DO NOT over tighten bolts and nuts as it may crack or break the plastic parts and cause vibration and noise while driving..

- Locate the battery tray **(a)** to the wiring harness.

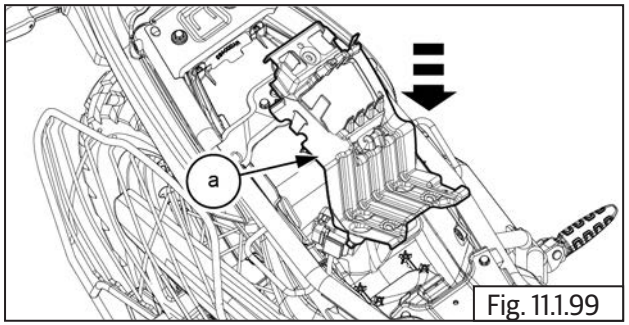

Fig. 11.1.99

- Fix the wire tag and clips **(a)** to the main battery and wiring harness.

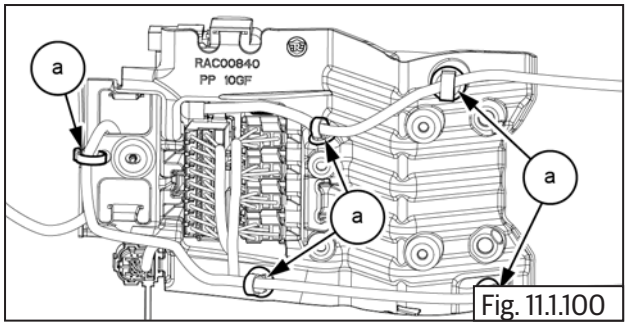

Fig. 11.1.100

- Locate and fix OBD coupler **(1)** on battery tray
- Fix the fuse with holders **(2)** to the battery tray and secure the lock.
- Fix the relay with holders **(4)** to the battery tray and secure the lock.
- Locate and fix starter relay **(3)** on battery tray

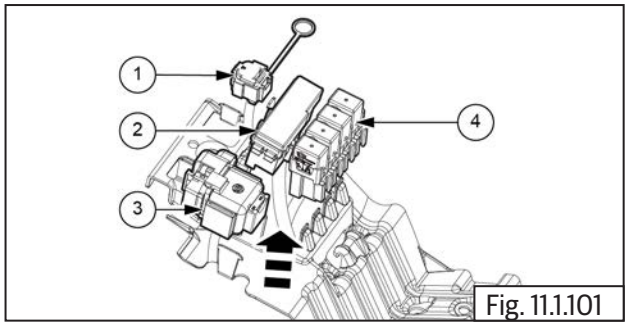

Fig. 11.1.101

- Locate and fix the battery tray with relay holders **(a)**.

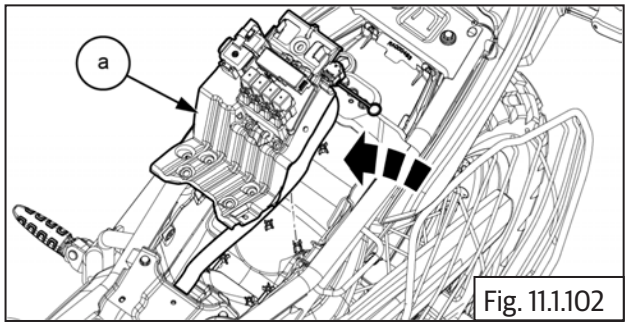

Fig. 11.1.102

- Locate and tighten 7Nos screws **(a)** with washers **(b)** on battery tray.

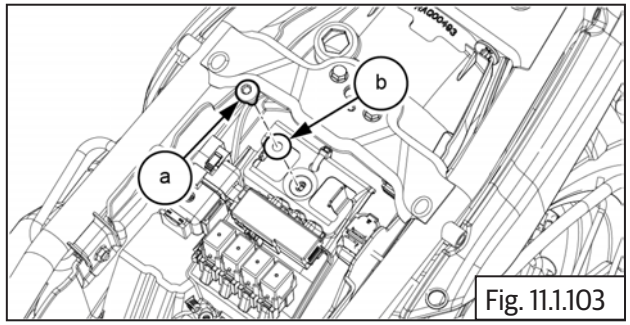

Fig. 11.1.103

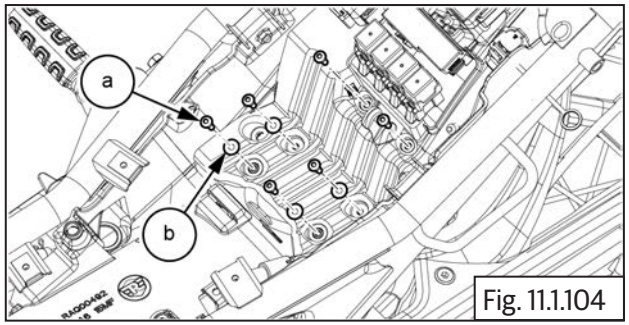

Fig. 11.1.104

	T20 Trox socket with ratchet
Torque	1.5 N-m / 0.15 kgf-m

- Locate and fix the rubber boot **(a)** on battery tray.

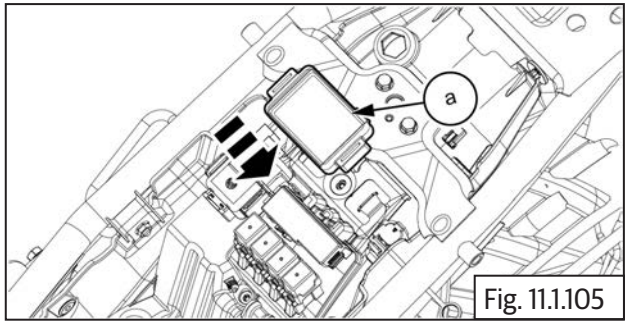

Fig. 11.1.105

- Locate and fix the telematics control unit **(a)** on battery tray.

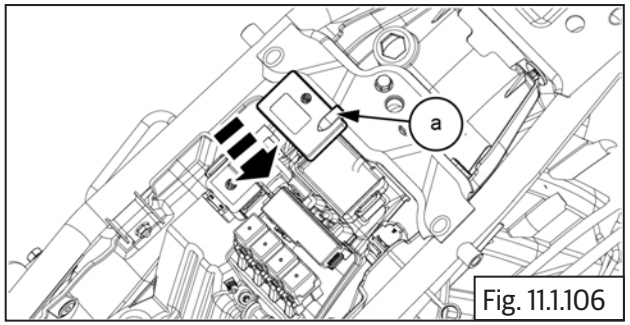

Fig. 11.1.106

- Connect below listed couplers to inside LH connector holder.
- **1. Cooling fan coupler**
- **2 Clutch switch.**
- **3.USP port coupler**.

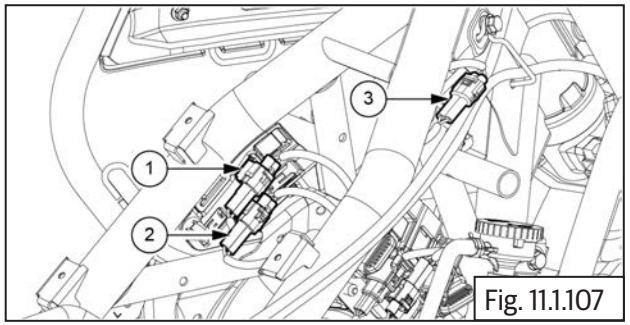

Fig. 11.1.107

- Connect below listed couplers on outside RH connector holder.
- **1. Fuel level sensor coupler**
- **2 & 3. RH switch cube coupler 2Nos.**
- **4.Throttle sensor coupler.**

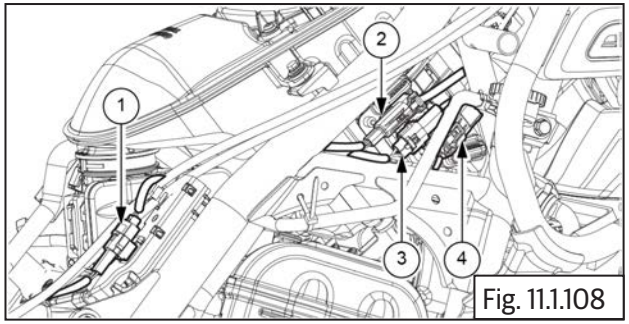

Fig. 11.1.108

- Connect below listed couplers on outside LH & RH connector holders.
- **1. Flasher Unit.**
- **2.Accessories coupler**
- **3 & 4. LH switch cube coupler 2Nos.**
- **5 . Ignition coil.**
- **6.Ignition key set coupler**
- **7. O2 Sensor**
- **8. Front wheel speed Sensor**

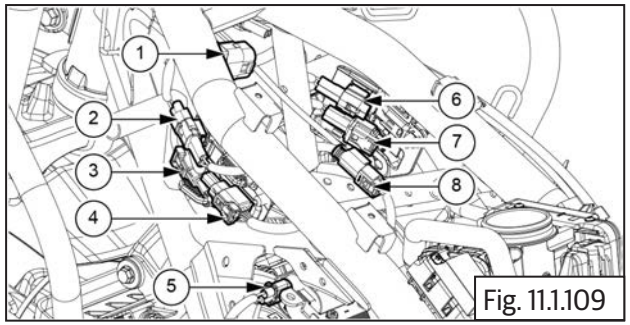

Fig. 11.1.109

- Connect below listed couplers on LH bottom battery tray.
- **1. Side stand switch**
- **2. Gear position sensor**
- **3. Crank position sensor**
- **4. Purge valve**
- **5.Charger Module**

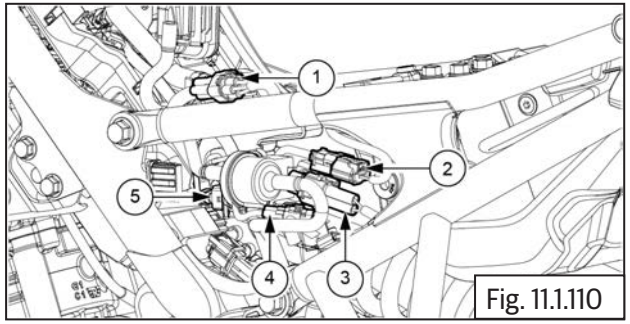

Fig. 11.1.110

- Connect oil pressure switch coupler **(a)**.

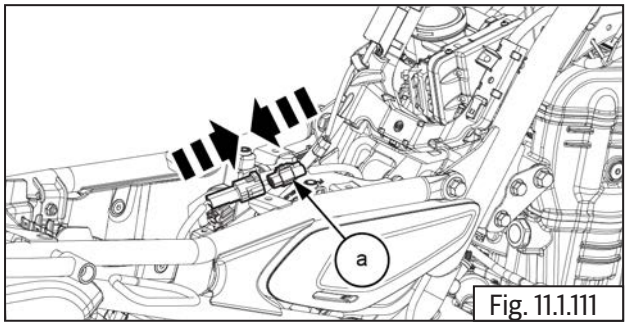

Fig. 11.1.111

- Connect coupler to ECU **(a)**.

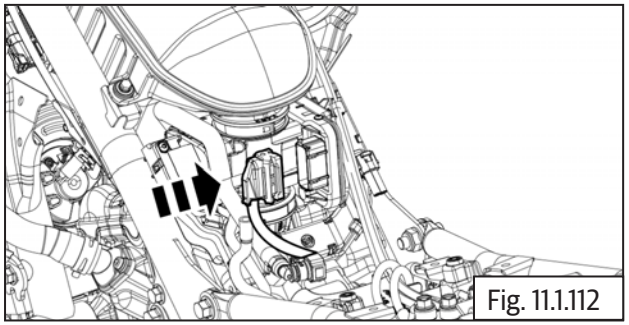
Fig. 11.1.112

- Coolant temperature sensor **(a)** located on rear side of cylinder head.
- Connect coolant temperature sensor coupler **(a)**.

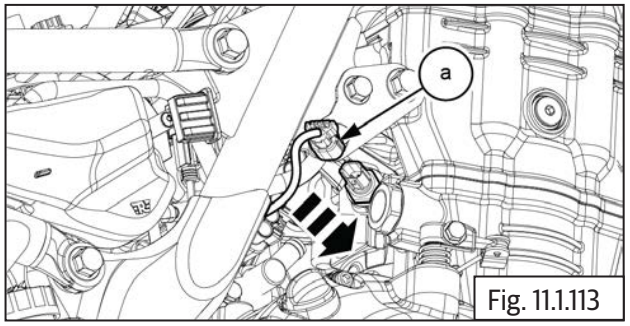

Fig. 11.1.113

- Connect cooling fan coupler **(a)**.

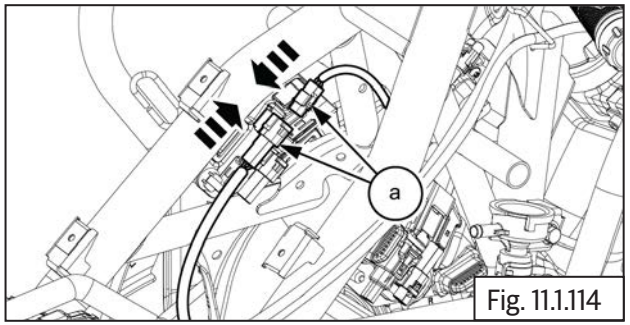

Fig. 11.1.114

- Connect ABS sensor coupler.

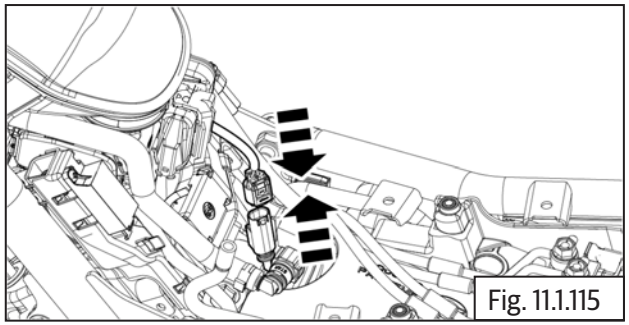
Fig. 11.1.115

- Connect Front ABS sensor coupler **(a)** from near RHS air filter.
- Connect Front wheel ABS sensor coupler **(a)**.

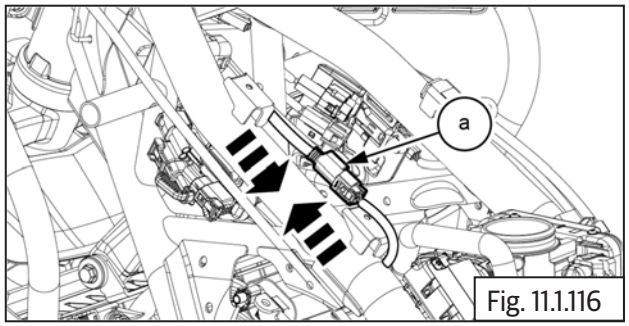

Fig. 11.1.116

- Connect ABS modulator coupler.

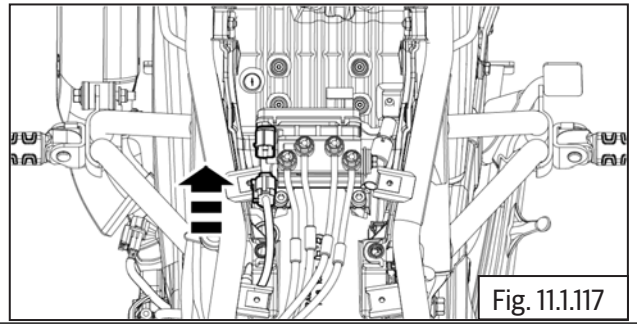
Fig. 11.1.117

- Connect rear brake pressure switch coupler **(a)**.

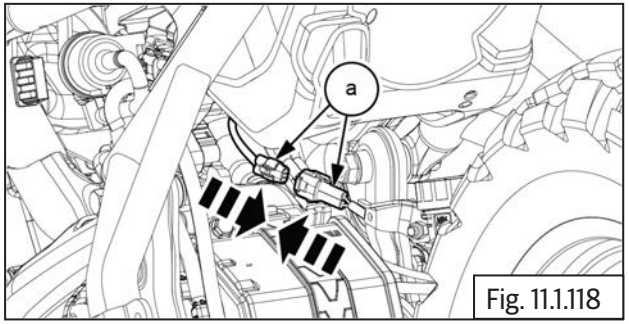

Fig. 11.1.118

- Connect front brake pressure switch connector **(a)**.

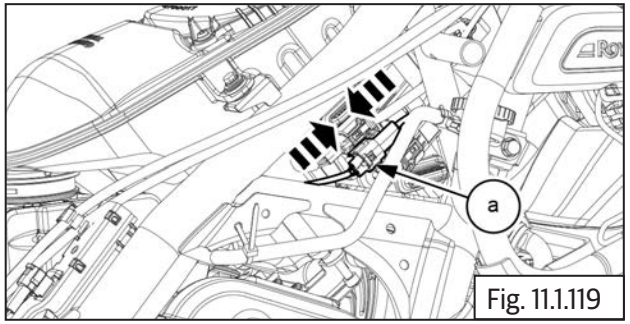

Fig. 11.1.119

- Connect 2 Nos ignition coil couplers **(a)**.

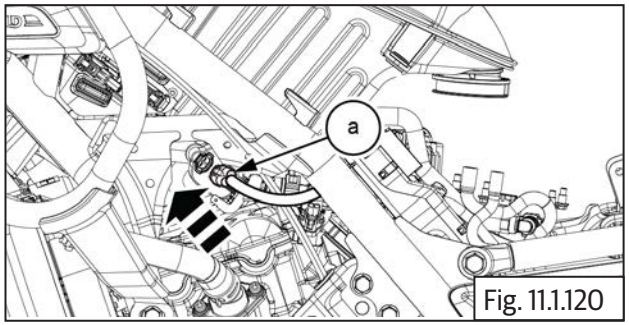

Fig. 11.1.120

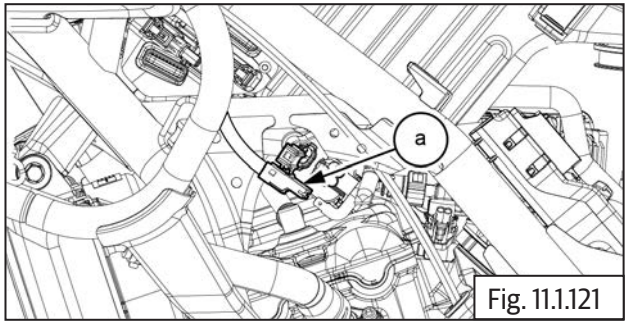

Fig. 11.1.121

- Connect cluster coupler **(a)**.

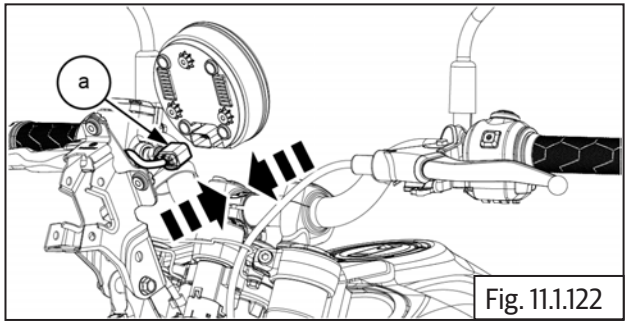

Fig. 11.1.122

- Connect Headlamp coupler **(a)**.

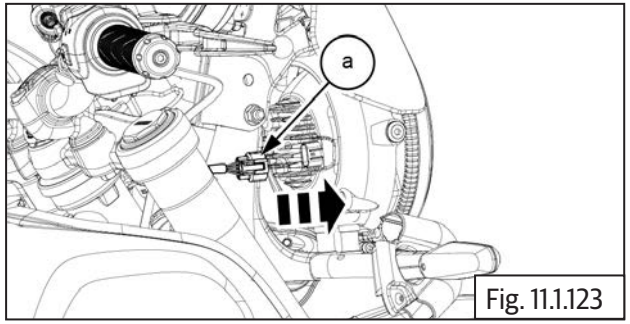

Fig. 11.1.123

- Fix LHS and RHS side panels.
- Fix air filter.
- Fix fuel tank.

11.18 Rear wiring harness

- Locate and align the wiring harness **(a)** on rear mudguard.

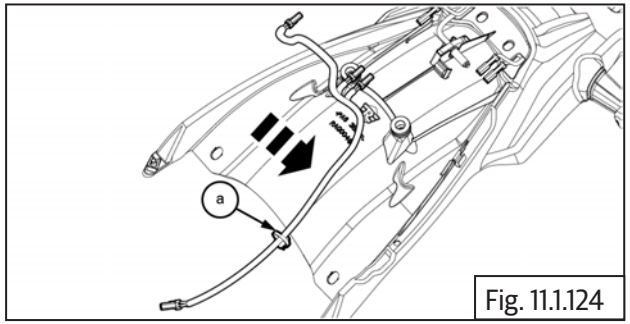

Fig. 11.1.124

- Attach 2 Nos cable holder clips **(a)** on wiring harness.

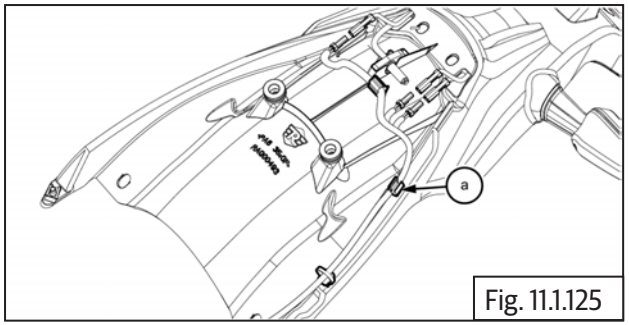

Fig. 11.1.125

11.19 USB C type adaptor

- Align the USB **(a)** to mount **(b)**.

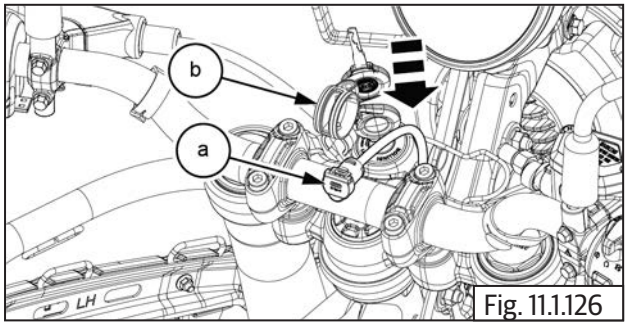

Fig. 11.1.126

- Locate and align the USB and mount **(a)** to handle bar.

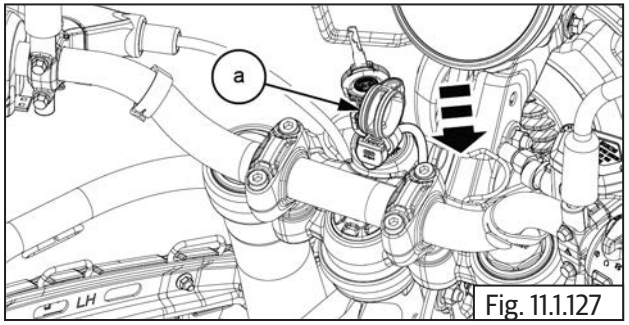

Fig. 11.1.127

- Connect the USB coupler **(a)**.

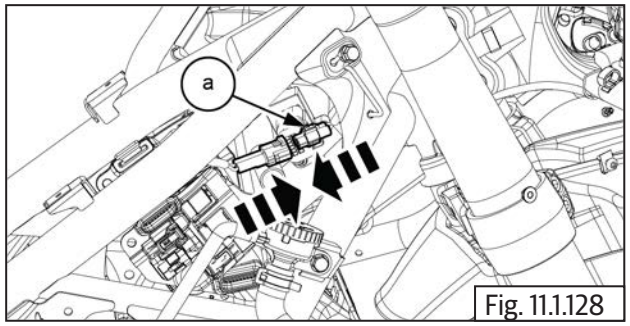

Fig. 11.1.128

- Locate and tighten the cap bolt **(M4) (a)** to USB mount.

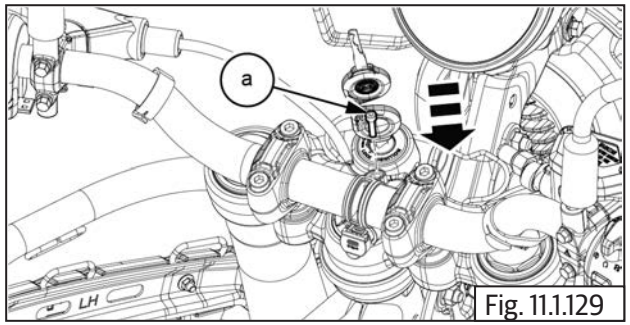

Fig. 11.1.129

	3 mm Allen socket with Ratchet
Torque	1 N-m / 0.1 kgf-m

11.20 Horn Dismantling

- Locate and tighten Hex flange bolt with nut **(M8) (a)** on horn bracket **(b)**.

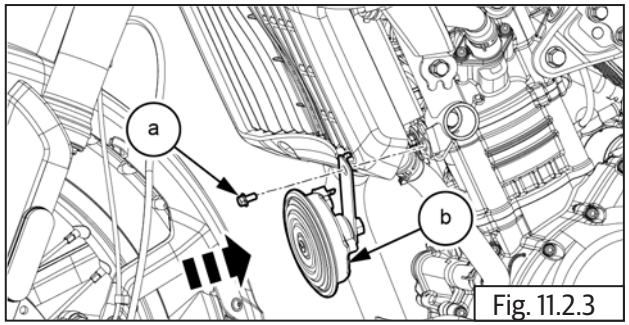

Fig. 11.2.3

	12 mm Socket with Ratchet
Torque	25 N-m / 2.5 kgf-m

- Connect coupler **(a)** to horn.

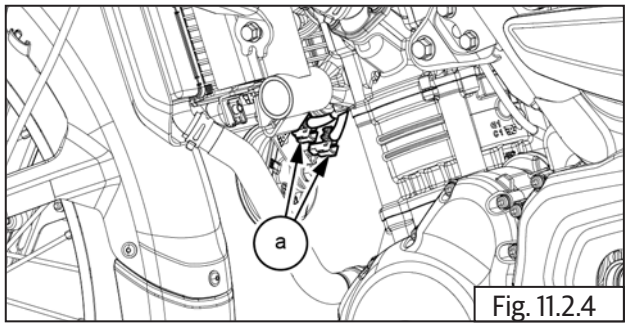

Fig. 11.2.4

11.21 Ambient temperature sensor

- Locate and align ambient temperature sensor **(a)** on rear mudguard.

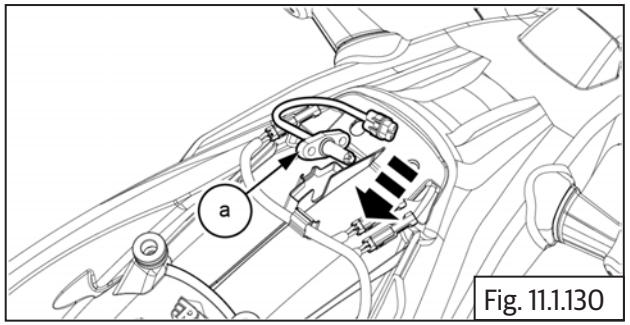

Fig. 11.1.130

- Connect ambient temperature sensor coupler **(a)**.

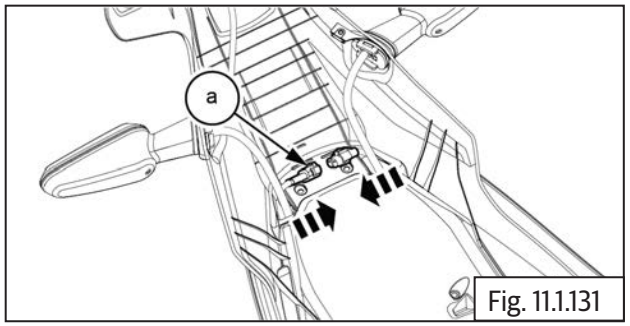

Fig. 11.1.131

11.22 License plate illuminator

- Locate and align the license plate illuminator **(a)** to rear mudguard.

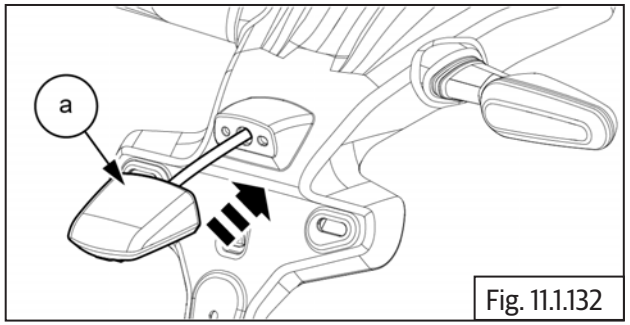

Fig. 11.1.132

- Locate and Tighten 2 Nos button head screws **(M5) (a)** to license plate illuminator.

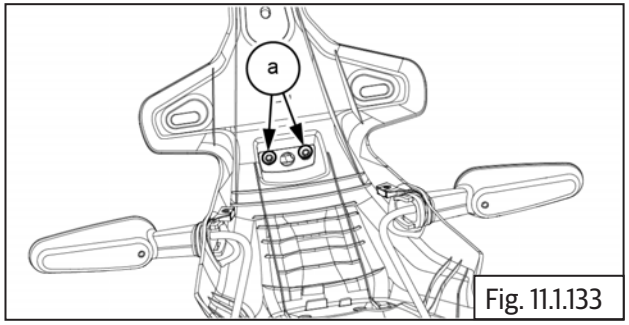

Fig. 11.1.133

	4 mm Allen socket with Ratchet
Torque	5 N-m / 0.5 kgf-m

- Connect license plate illuminator connector **(b)**.

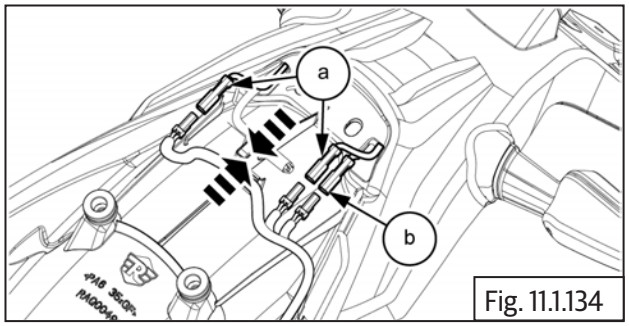

Fig. 11.1.134

11.23 Rear Trafficator

- Gently insert and attach the rear trafficator **(a)**.

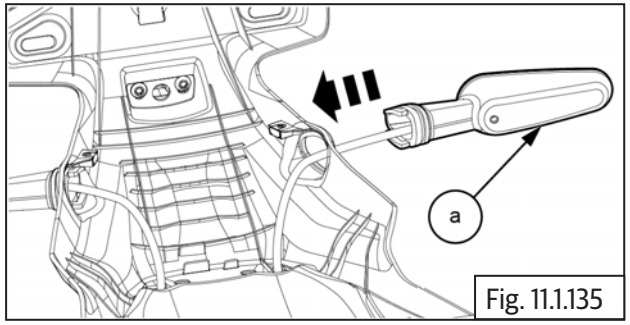

Fig. 11.1.135

- Locate and fix end cap **(a)** to trafficator.

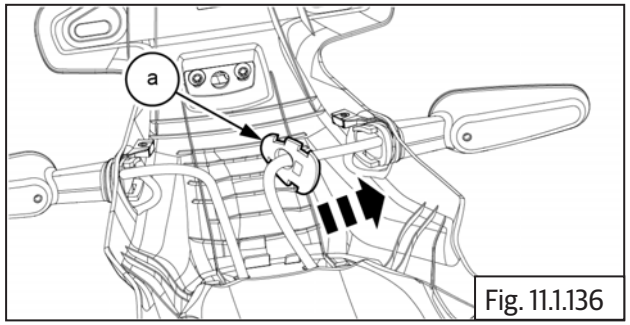

Fig. 11.1.136

- Connect LHS and RHS traficator connector **(a)**.

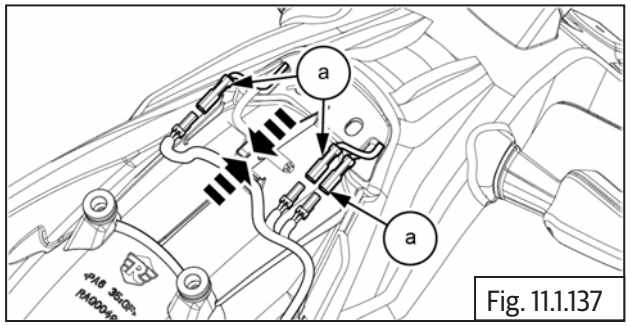

Fig. 11.1.137

- Locate and align the cover **(a)** on rear mudguard.

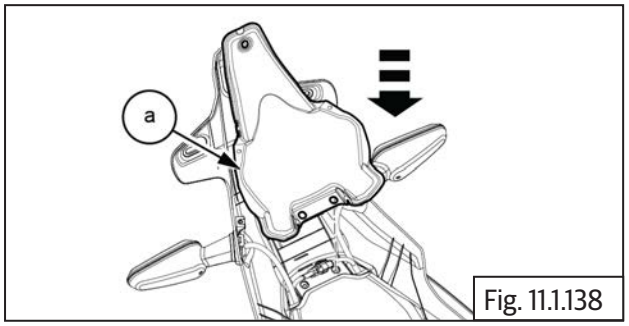

Fig. 11.1.138

- Locate and Tighten the button head bolt **(M5) (a)** on cover.

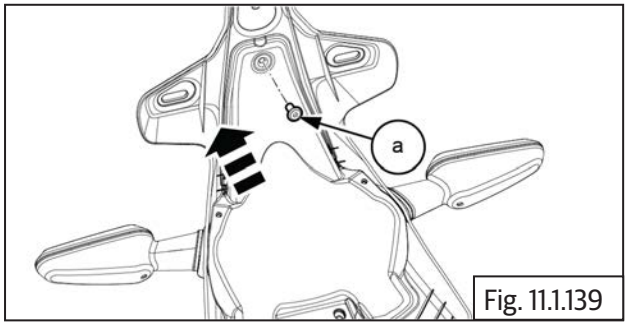

Fig. 11.1.139

	4 mm Allen socket with Ratchet
Torque	5 N-m / 0.5 kgf-m

- Locate and tighten 2 Nos screws **(a)** on cover.

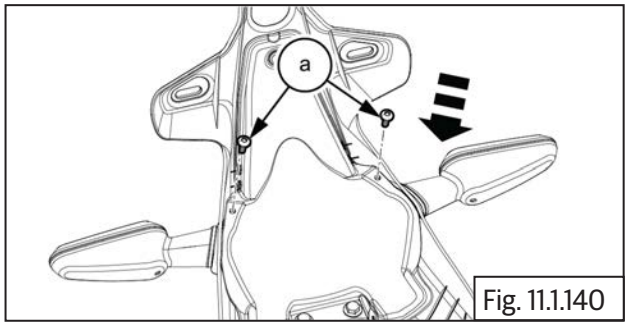

Fig. 11.1.140

	T20 Torx socket with Ratchet
Torque	1.5 N-m / 0.15 kgf-m

- Locate and tighten 2 Nos hex head bolts **(M6) (a)** from cover.

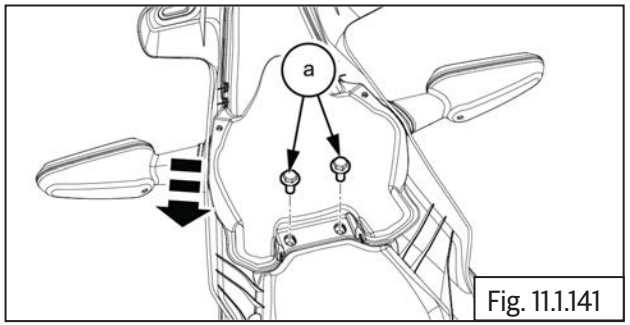

Fig. 11.1.141

	10 mm socket with Ratchet
Torque	10 N-m / 1.0 kgf-m

- Locate the rear mudguard **(a)** on number plate hanger.

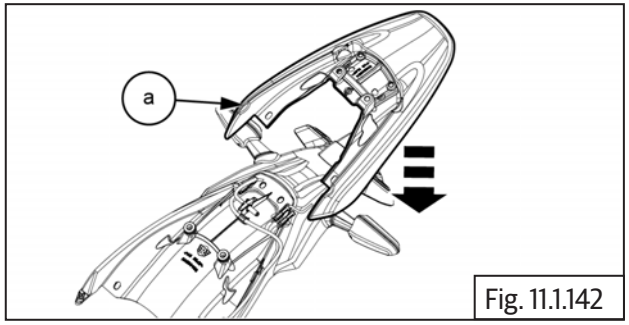

Fig. 11.1.142

- Locate and tighten 2 Nos button head bolts **(M5) (a)** on rear mudguard.

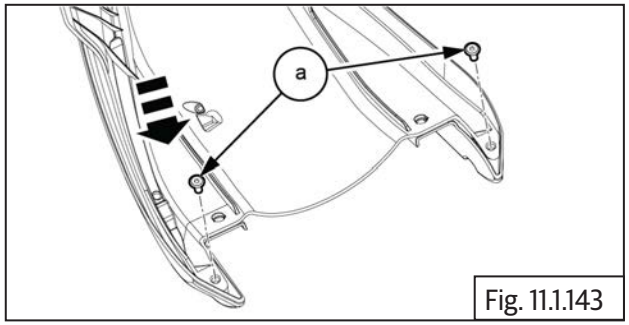

Fig. 11.1.143

	4 mm Allen socket with Ratchet
Torque	5 N-m / 0.5 kgf-m

- Repeat the same procedure to LHS trafficator.

11.24 Ignition Switch Cum Steering Lock

- Gently locate the ignition key set **(a)**.

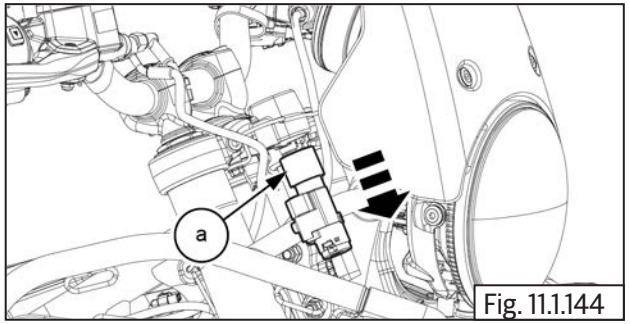

Fig. 11.1.144

- Locate and tighten 2 Nos. cap bolts **(M6) (a)** to below key set.

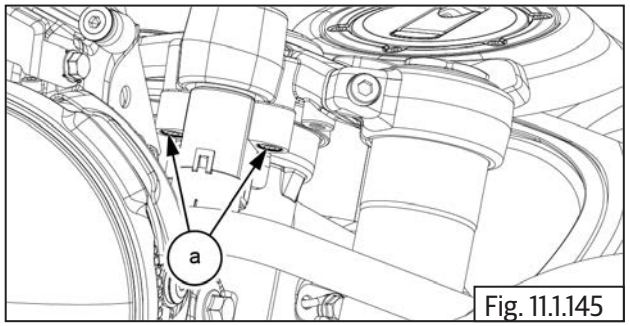

Fig. 11.1.145

	5 mm Allen socket with Ratchet
Torque	10 N-m / 1.0 kgf-m

- Connect the ignition switch coupler.

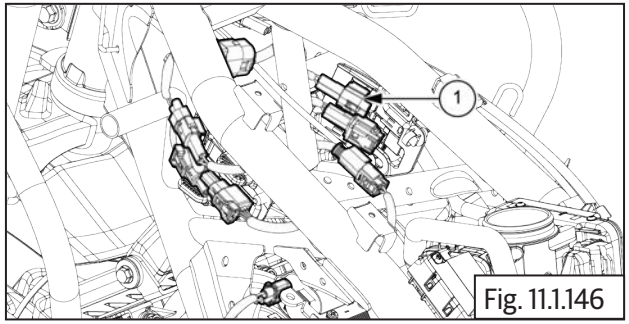

Fig. 11.1.146

- Locate the harness clip **(a)** to RHS chassis frame.
- Tighten the hex head flange bolt (M6).
- Attach the fuel tank.

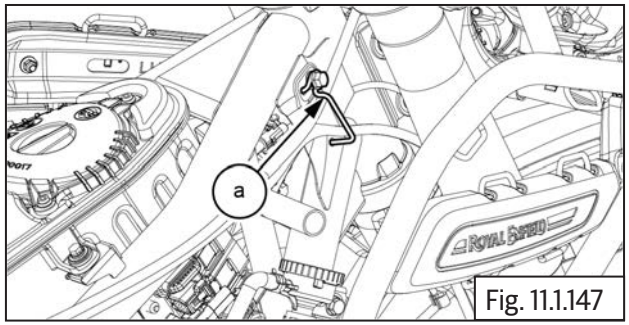

Fig. 11.1.147

	10 mm Socket with Ratchet
Torque	10 N-m / 1.0 kgf-m

11.25 TFT Instrument Cluster

Locate and align the TFT cluster **(a)** on top bracket.

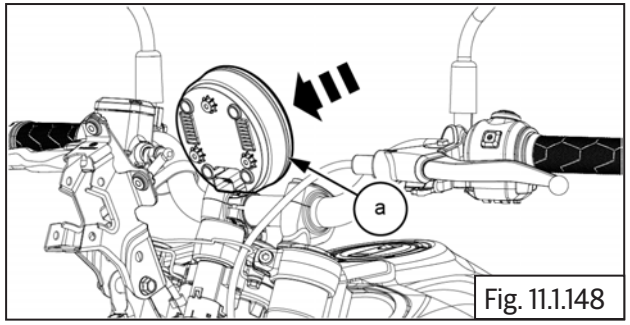

Fig. 11.1.148

- Connect the TFT cluster coupler **(a)**.

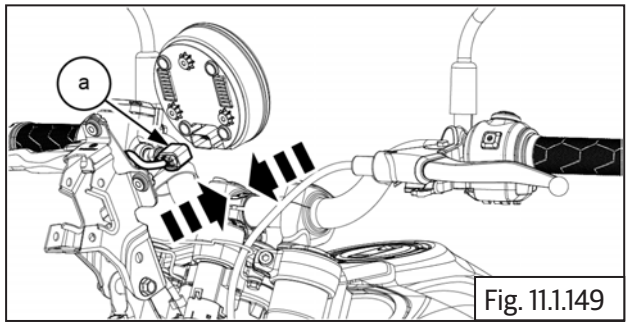

Fig. 11.1.149

- Locate and tighten 3 Nos button head screws **(M6) (a)** to the TFT cluster.

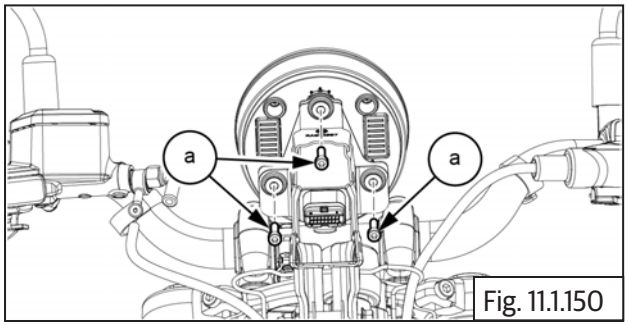

Fig. 11.1.150

	4mm Allen socket with ratchet
Torque	5 N-m / 0.5 kgf-m

- Locate and align windscreen **(a)** to windscreen mount bracket.

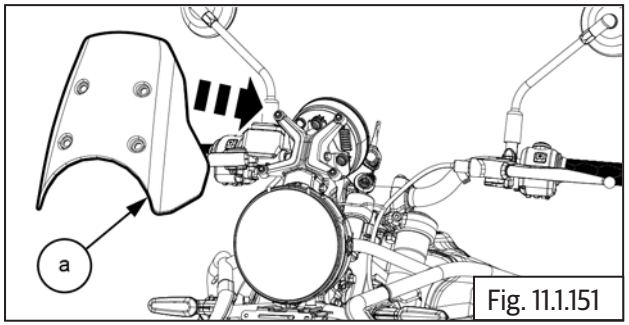

Fig. 11.1.151

- Locate and tighten 4 Nos button head screws **(M6)** **(a)** on windscreen.

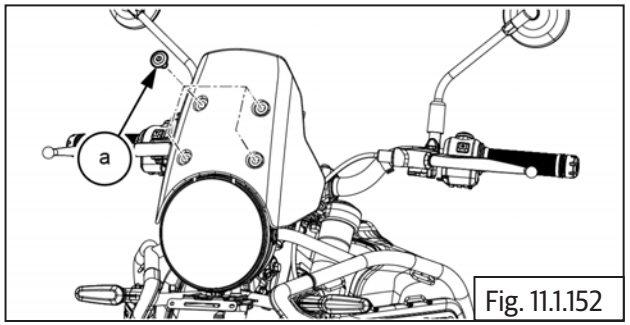

Fig. 11.1.152

	5mm Allen socket with ratchet
Torque	10 N-m / 1.0 kgf-m

11.26 Front Trafficators RH

- Locate front trafficator RH **(a)** into RH side bar.

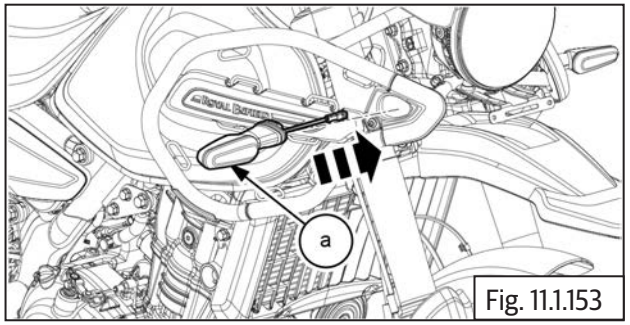

Fig. 11.1.153

- Connect electrical coupler **(a)** into front trafficator RH.

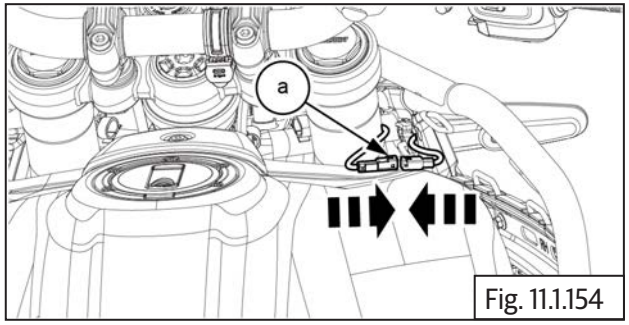

Fig. 11.1.154

- Gently press and locate retainier clip **(a)** into trafficator RH.

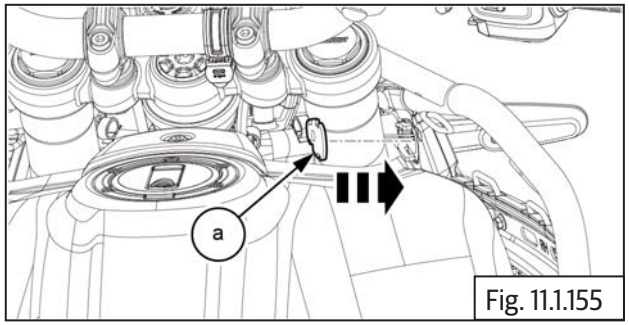

Fig. 11.1.155

11.27 Front Trafficators LH

- Locate front trafficator LH **(a)** into LH side bar.

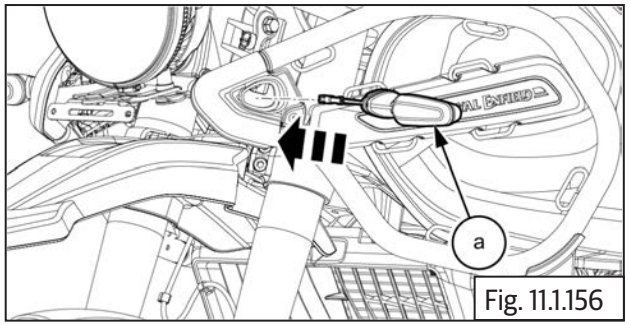

Fig. 11.1.156

- Connect electrical coupler **(a)** .

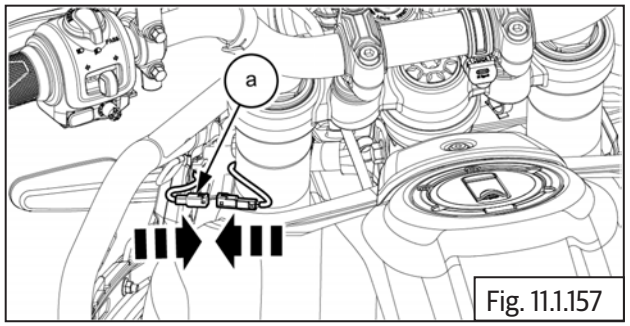

Fig. 11.1.157

- Gently press and locate retainer clip **(a)** into trafficator LH.

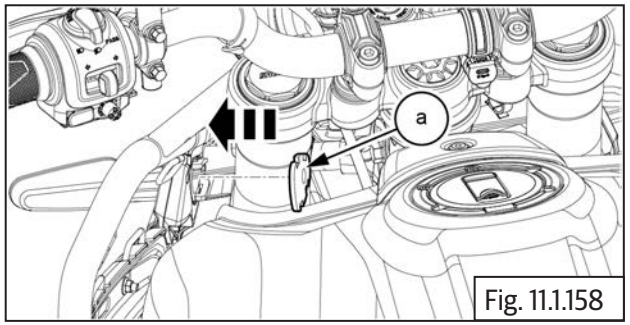

Fig. 11.1.158

- Connect the battery terminals.
- Make sure the cluster, front trafficators, and head lamps work properly.

11.28 Headlamp

NOTE
• *Ensure ignition switch and stop switch in off condition.*

⚠ **CAUTION**
Support the Headlamp assembly carefully.

- Locate and align the head lamp **(a)** assembly.

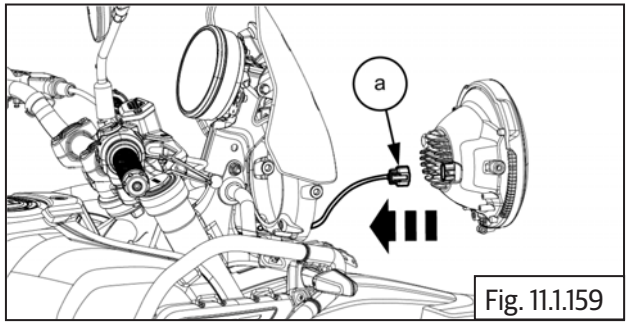

Fig. 11.1.159

- Locate and tighten the LH & RH **(a)** side head lamp holder.

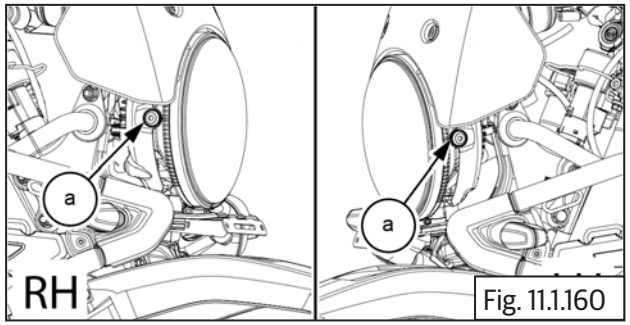

Fig. 11.1.160

	4mm Allen socket with ratchet
Torque	3 - 4 N-m / 0.3 - 0.4 kgf-m

- Connect head lamp coupler **(a)**.

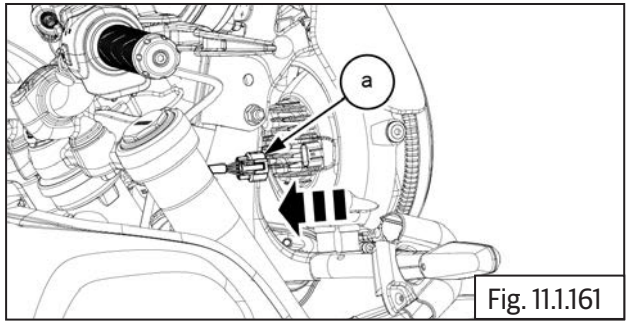

Fig. 11.1.161

- Locate and tighten the head light beam adjustment screw **(a)**.

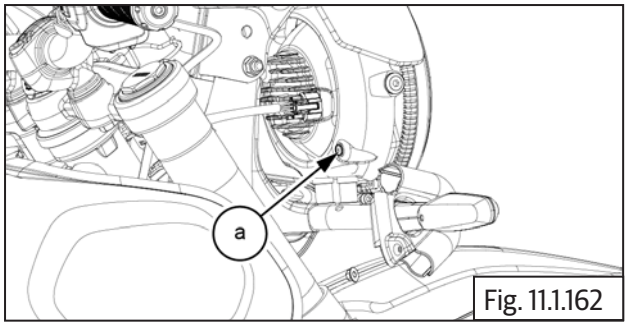

Fig. 11.1.162

	4 mm Allen key with ratchet

11.29 Starter relay with cable

- Locate and align the main cable.
- Fix the 2Nos wire tags **(a)** to the battery tray.

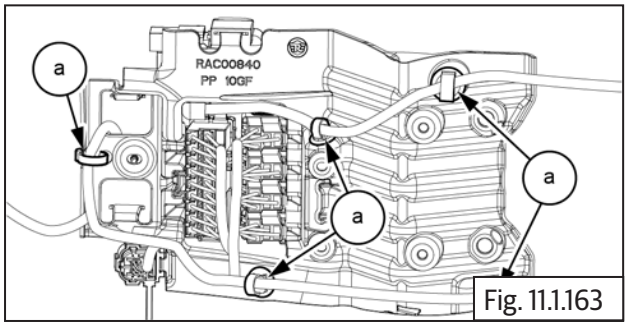

Fig. 11.1.163

- Locate and tighten the nut to self motor main cable **(a)**.

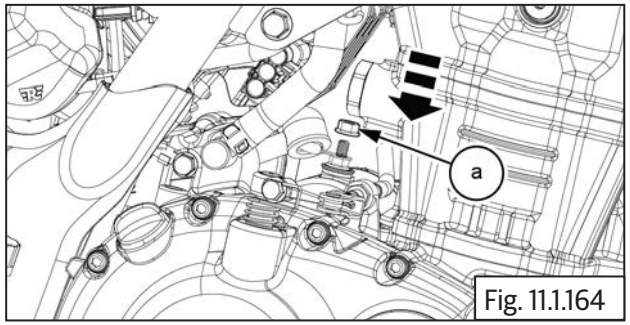

Fig. 11.1.164

	10 mm Socket with Ratchet
Torque	3.5 - 4 N-m / 0.35 - 0.4 kgf-m

- Locate and align starter relay **(a)** to battery tray.

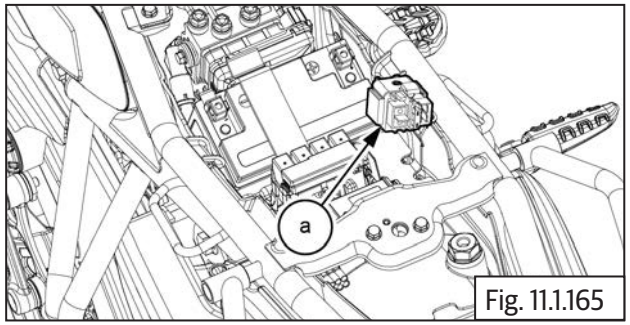

Fig. 11.1.165

- Locate the battery main cables **(a)** to starter relay.

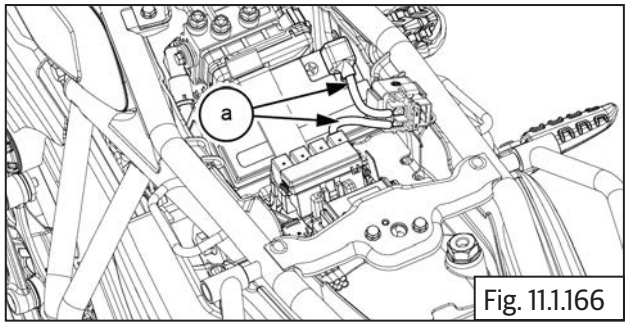

Fig. 11.1.166

- Locate and tighten the 2 Nos screws **(a)** to the main cable.

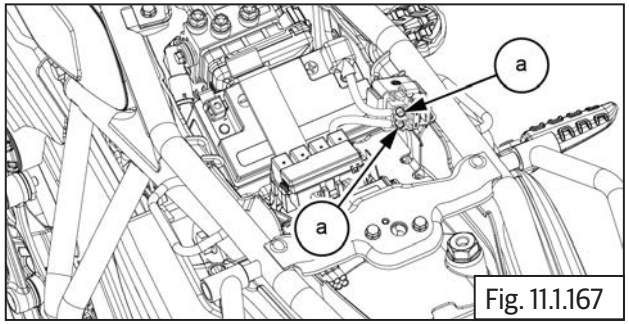

Fig. 11.1.167

	4mm Allen socket with ratchet
Torque	5 N-m / 0.5 kgf-m

- Insert the starter relay **(a)** into the slot.

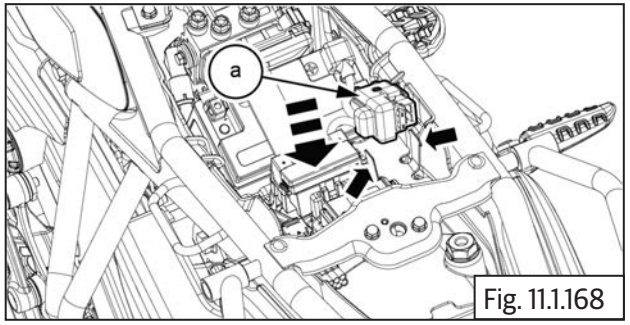

Fig. 11.1.168

- Close the cap **(a)** on the starter relay.

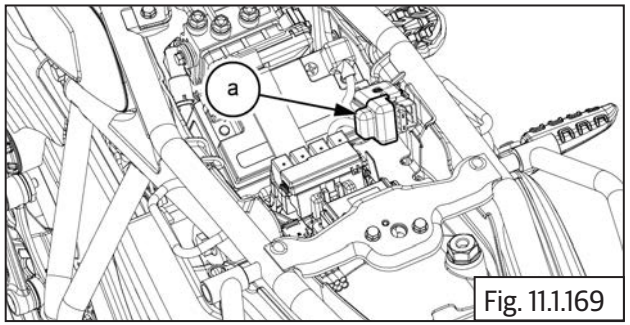

Fig. 11.1.169

- Connect the starter relay coupler **(a)**.

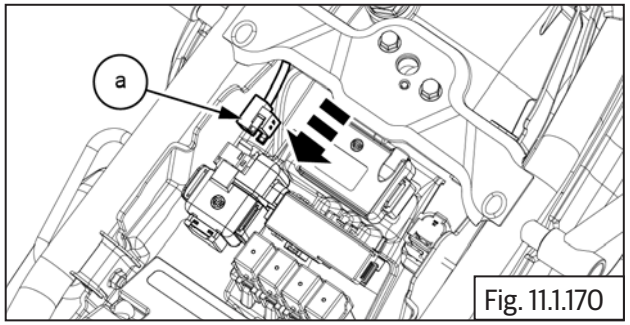

Fig. 11.1.170

11.30 Electronic flasher

- Locate and align the flasher **(a)** to the chassis frame.

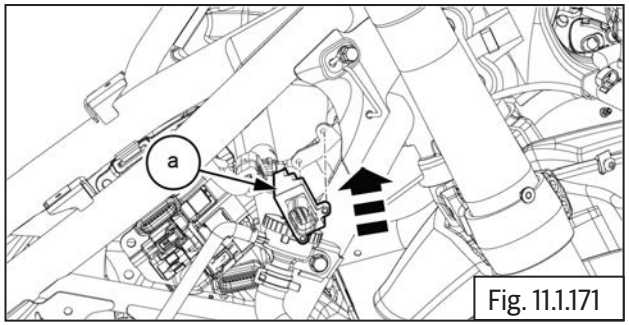

Fig. 11.1.171

- Locate and tighten 2 Nos screws **(a)** to the Electronic flasher.

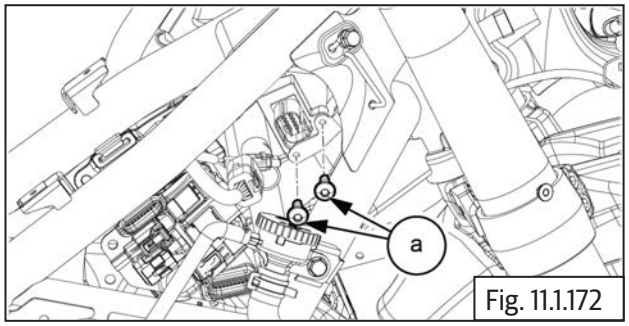

Fig. 11.1.172

	T20 Torx socket with Ratchet
Torque	1.5 N-m / 0.15 kgf-m

- Connect the flasher coupler **(a)**.

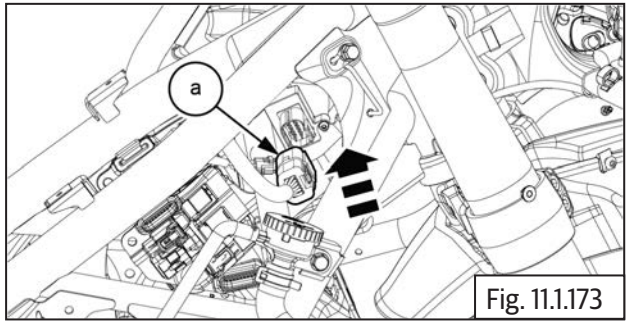

Fig. 11.1.173

11.31 RR Unit

- Locate and align RR unit **(b)** to bracket **(c)**.
- Locate and tighten 2 Nos nut **(M6) (a)** to the RR unit **(b)**.

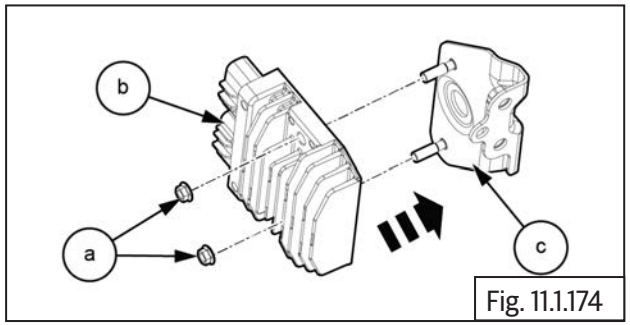

Fig. 11.1.174

	10 mm Socket with Ratchet
Torque	10 N-m / 1.0 kgf-m

- Tighten and attach Hex flange head bolt 1 Nos **(M10) (a)** to RR unit bracket.

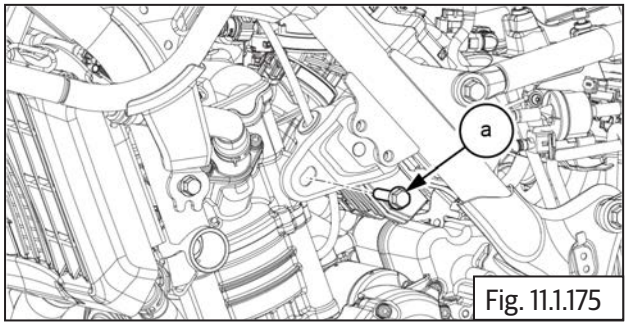

Fig. 11.1.175

	14 mm Socket with Ratchet
Torque	45 N-m / 4.5kgf-m

- Tighten and attach Hex flange head bolts **2 Nos (M6) (a)** to RR unit bracket.

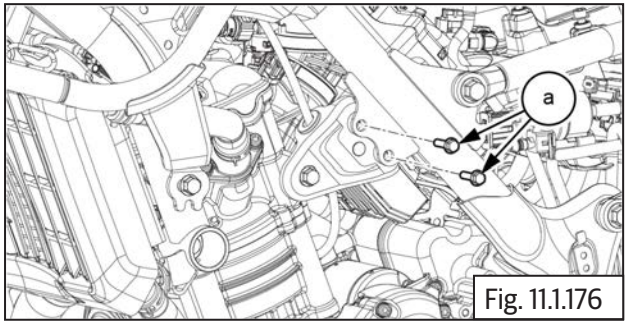

Fig. 11.1.176

	12 mm Socket with Ratchet
Torque	25 N-m / 2.5kgf-m

- Connect 2 Nos electrical connector **(a)** to RR unit.

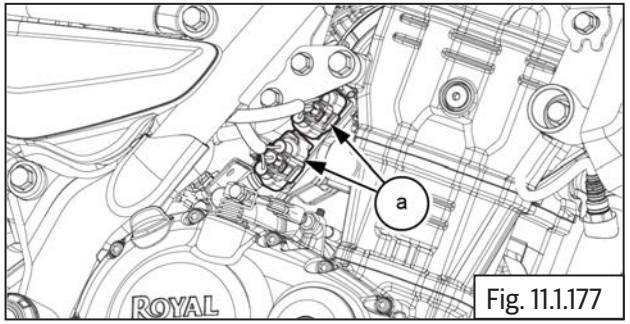

Fig. 11.1.177

11.32 Battery Assembly

Battery Terminals

- Ensure Ignition and stop switch are in OFF position before connecting battery cables.
- Locate the battery **(a)** to tray.

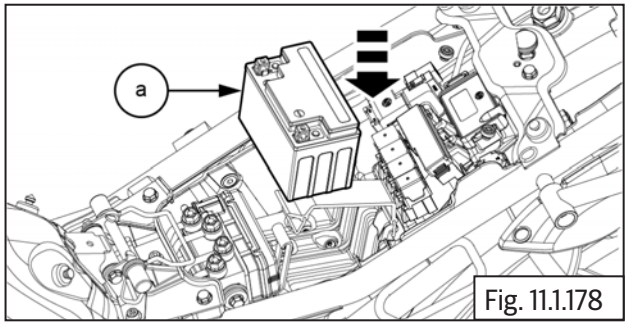

Fig. 11.1.178

- Pull battery strap (belt) **(a)** downwards and secure strap lock to battery strap bracket.

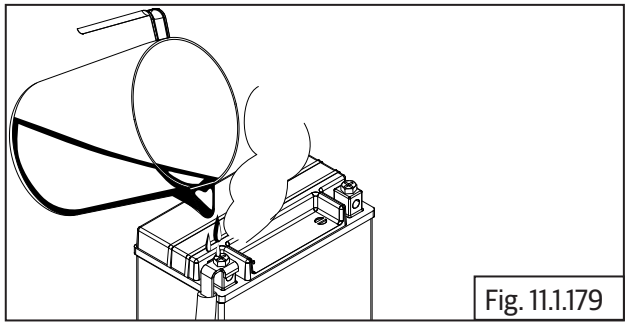
Fig. 11.1.179

- Connect battery negative (- ve) terminal bolt **(a).**

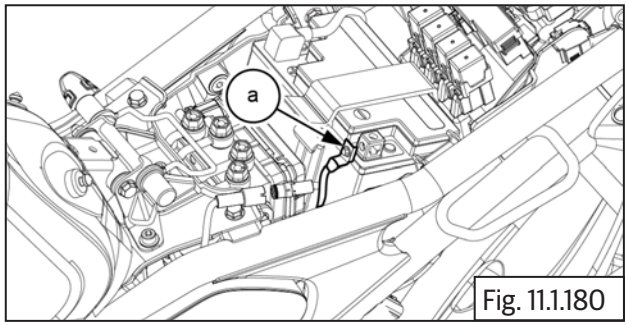

Fig. 11.1.180

	10 mm Socket with Ratchet
Torque	3-4 N-m / 0.3 - 0.4 kgf-m

- Connect battery positive (+ ve) terminal bolt **(a)**.

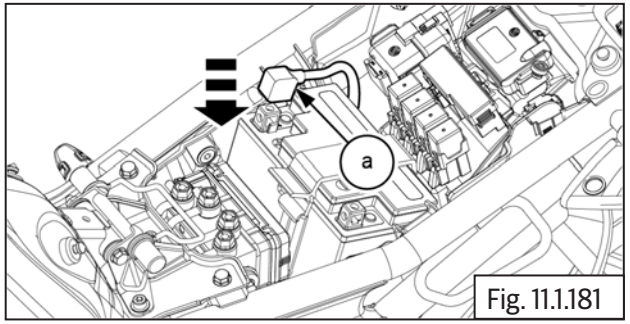

Fig. 11.1.181

	10 mm Socket with Ratchet
Torque	3-4 N-m / 0.3 - 0.4 kgf-m

- Connect the negative (- ve) coupler **(a)**.

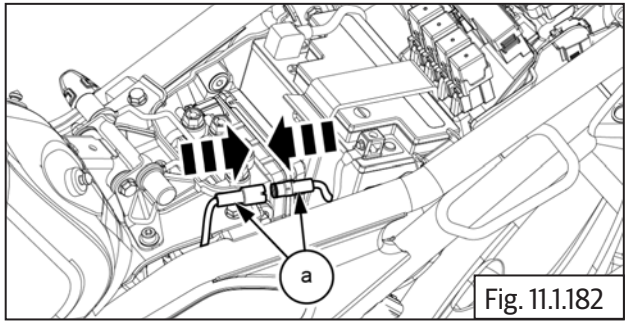

Fig. 11.1.182

- Insert ignition key into the key barrel and switch "ON" the engine.
- Make sure the cluster, front trafficators, and head lamps work properly.
- Install the Pillion seat and rider seat.
- Install the fuel tank

ELECTRICAL SCHEMATIC

HIMALAYAN WIRING HARNESS - EMS & SPARK

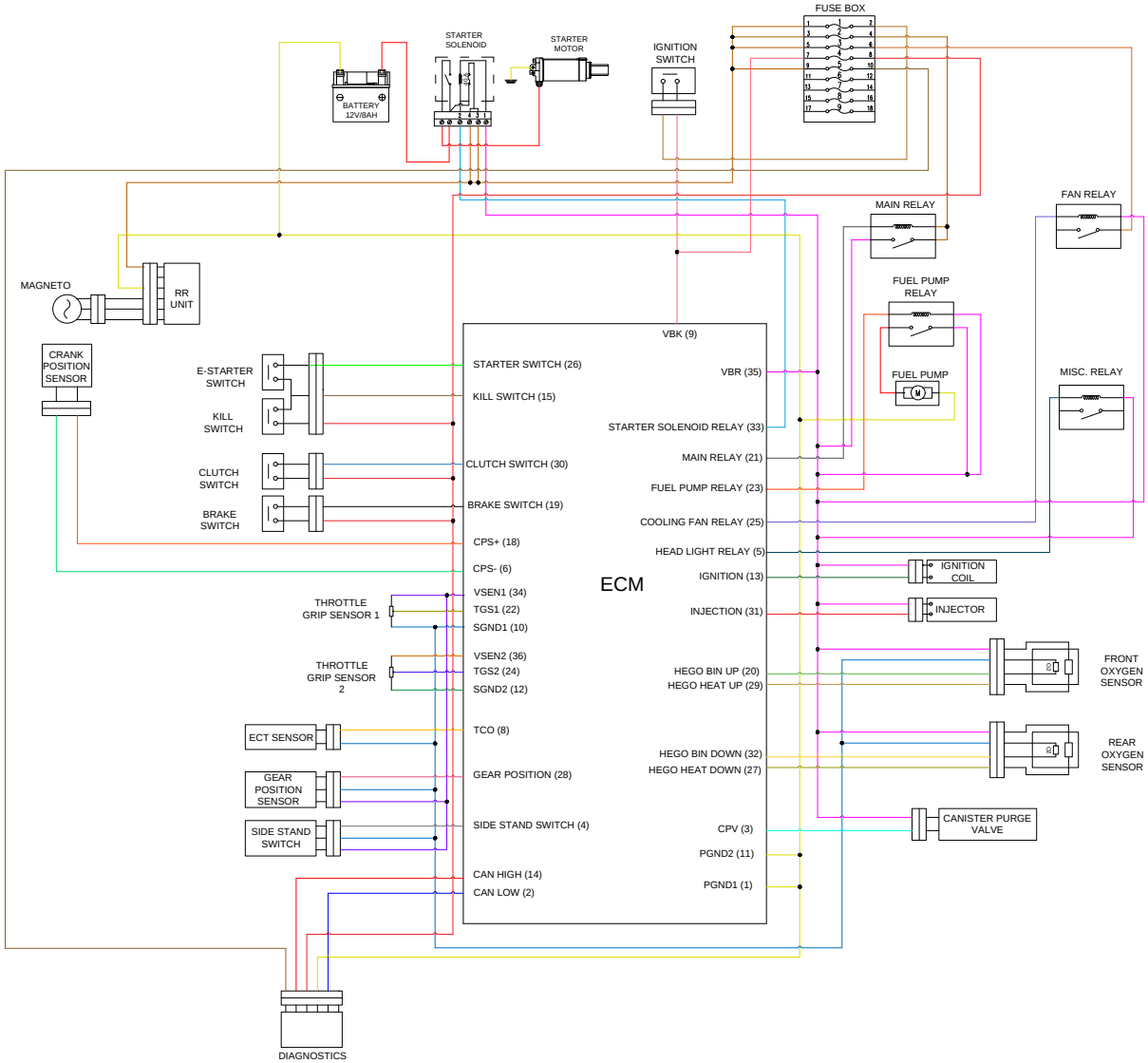

HIMALAYAN WIRING HARNESS - LIGHTING SYSTEM

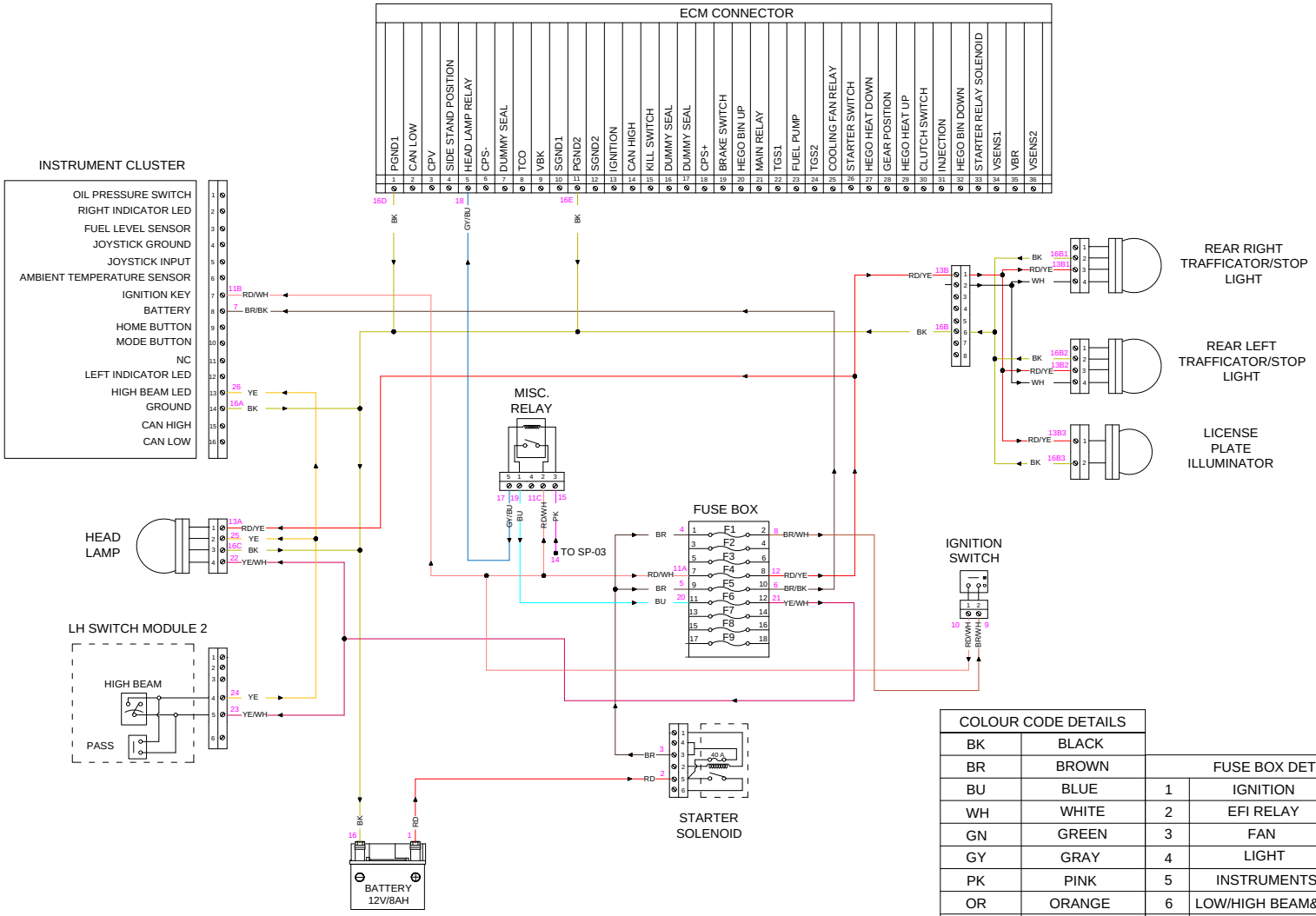

COLOUR CODE DETAILS	
BK	BLACK
BR	BROWN
BU	BLUE
WH	WHITE
GN	GREEN
GY	GRAY
PK	PINK
OR	ORANGE
RD	RED
VT	VIOLET
YE	YELLOW

FUSE BOX DETAILS		
1	IGNITION	15A
2	EFI RELAY	15A
3	FAN	10A
4	LIGHT	5A
5	INSTRUMENTS	5A
6	LOW/HIGH BEAM&ACC	10A
7	HORN	10A
8	ABS MOTOR	15A
9	ABS VALVE	10A

HIMALAYAN WIRING HARNESS - STARTING SYSTEM

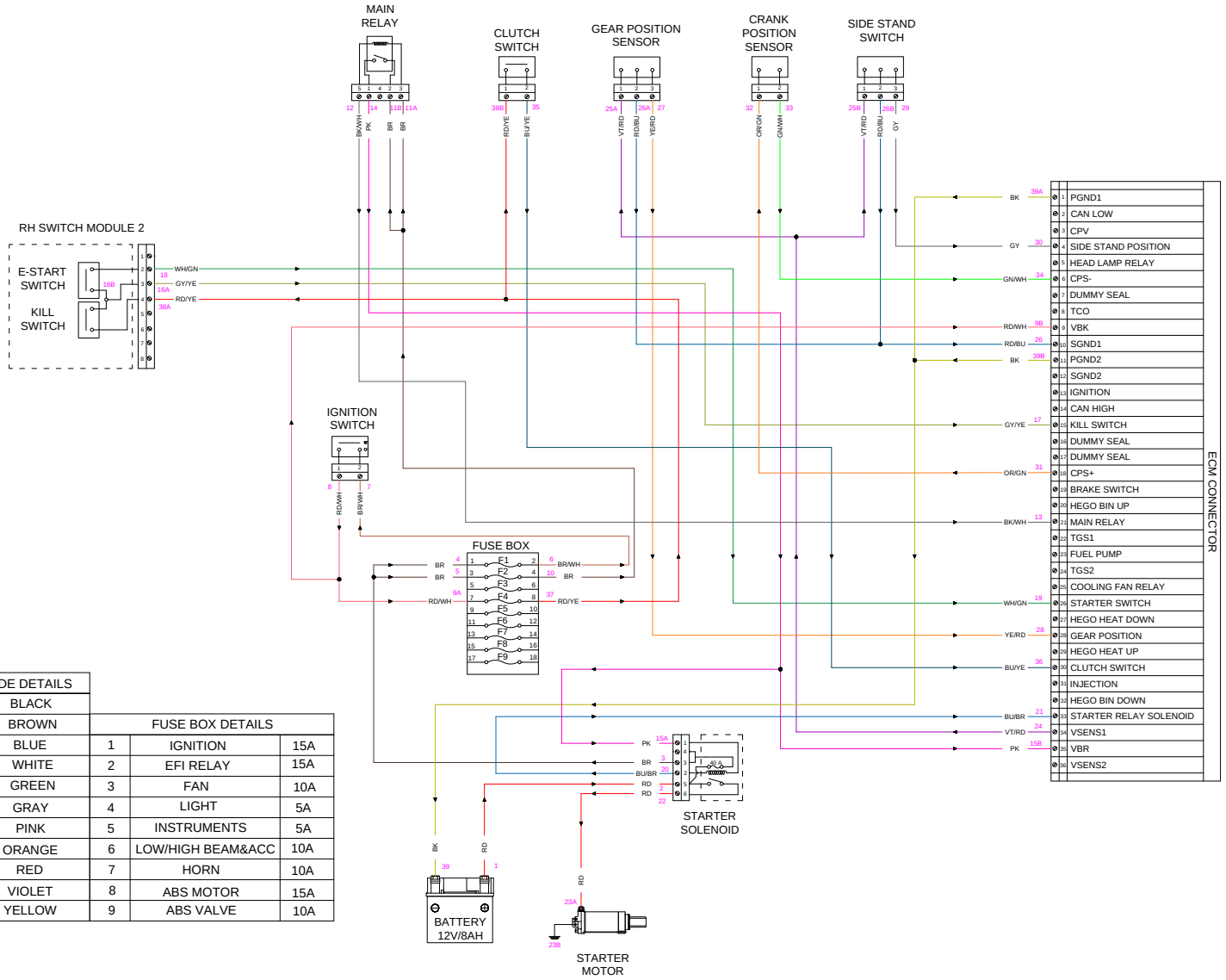

COLOUR CODE DETAILS	
BK	BLACK
BR	BROWN
BU	BLUE
WH	WHITE
GN	GREEN
GY	GRAY
PK	PINK
OR	ORANGE
RD	RED
VT	VIOLET
YE	YELLOW

FUSE BOX DETAILS		
1	IGNITION	15A
2	EFI RELAY	15A
3	FAN	10A
4	LIGHT	5A
5	INSTRUMENTS	5A
6	LOW/HIGH BEAM&ACC	10A
7	HORN	10A
8	ABS MOTOR	15A
9	ABS VALVE	10A

HIMALAYAN WIRING HARNESS - DOMESTIC/EUROPE

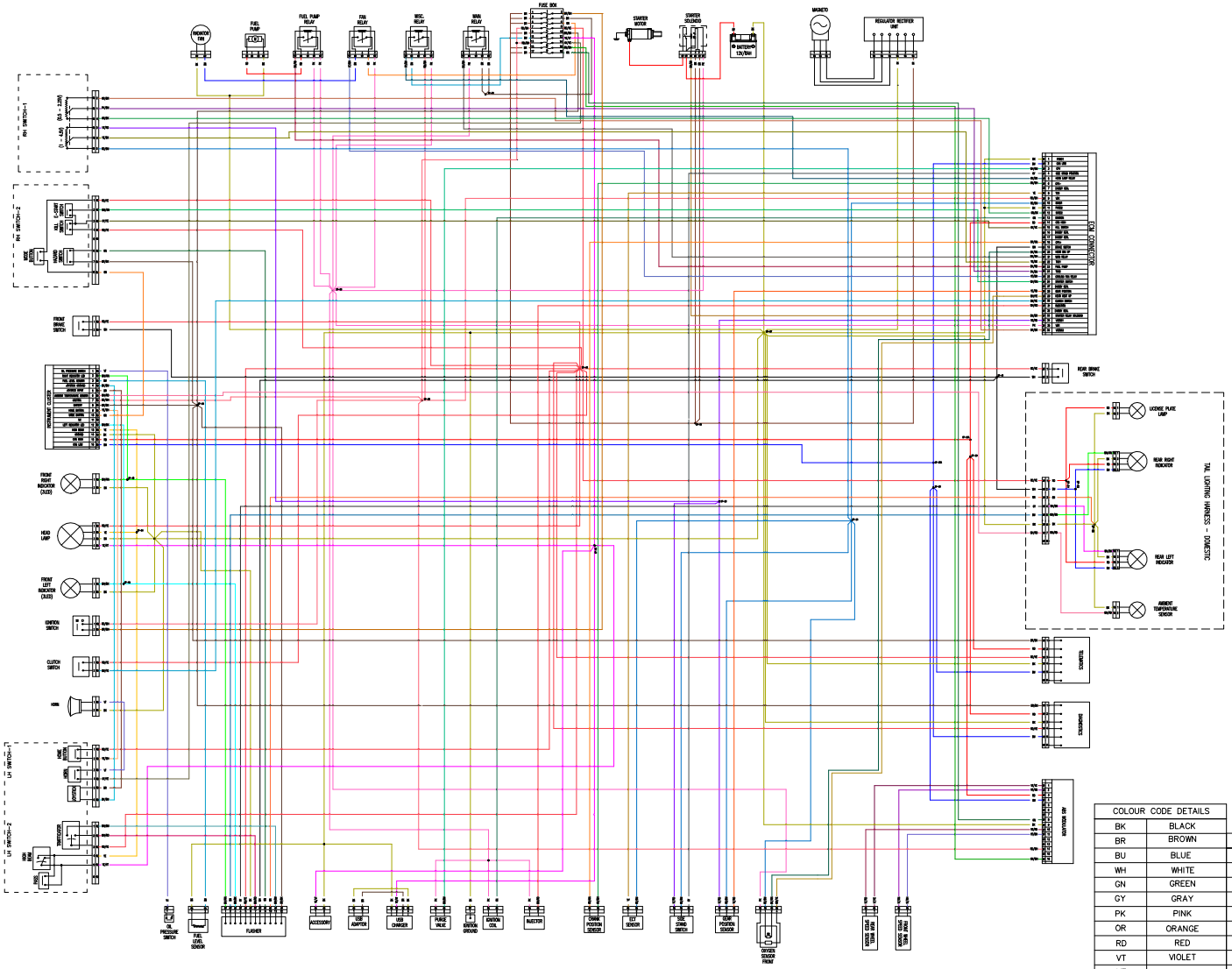

COLOUR CODE DETAILS	
BK	BLACK
BR	BROWN
BU	BLUE
WH	WHITE
GN	GREEN
GY	GRAY
PK	PINK
OR	ORANGE
RD	RED
VT	VIOLET
YE	YELLOW

FUSE BOX DETAILS		
1	IGNITION	15A
2	EFI RELAY	15A
3	FAN	10A
4	POS. LIGHTS	5A
5	INSTRUMENTS	5A
6	LOW/HIGH BEAM/ACCESSORY	10A
7	HORN	10A
8	ABS MOTOR	15A
9	ABS VALVE	10A

HIMALAYAN WIRING HARNESS - ABS SYSTEM

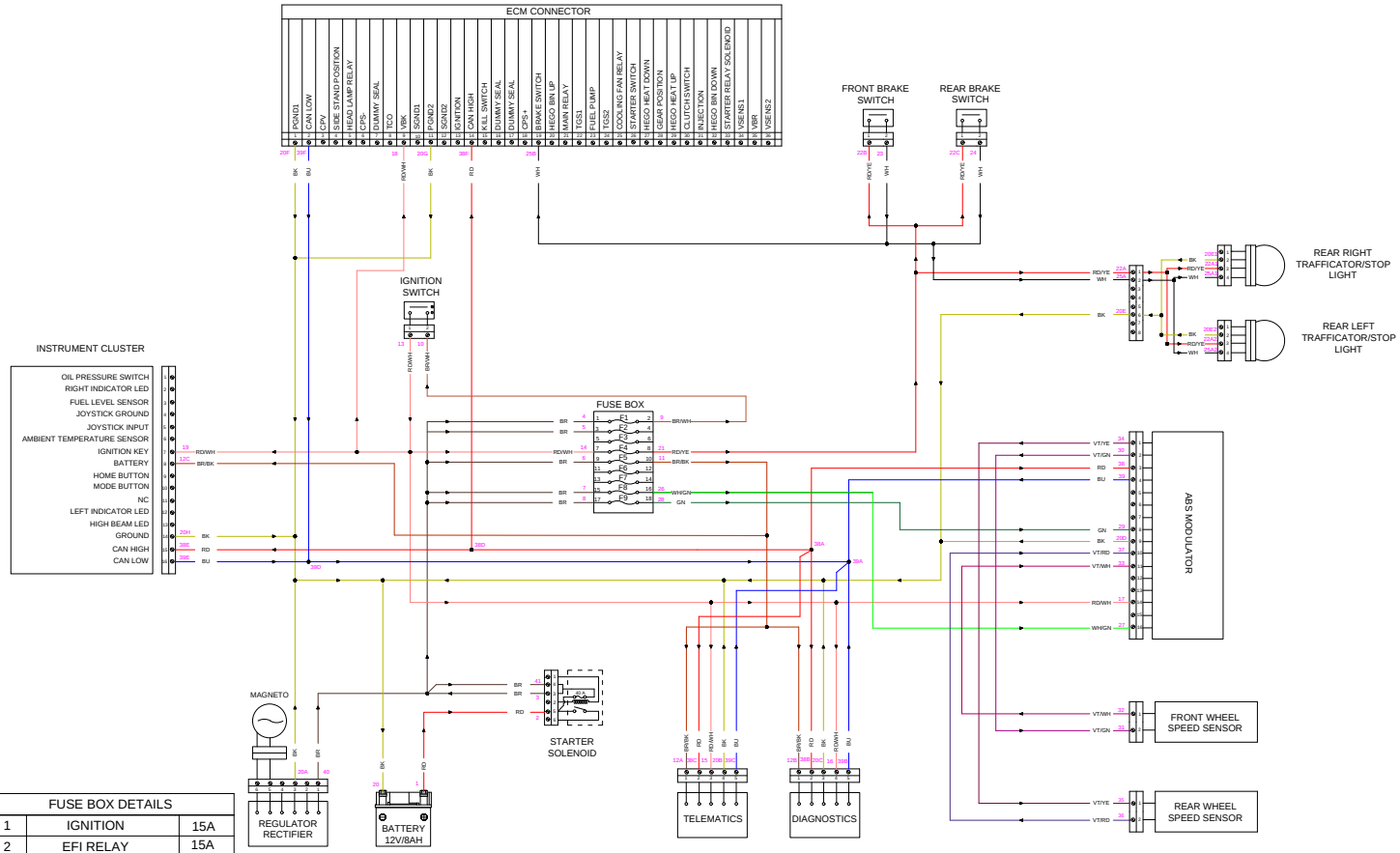

COLOUR CODE DETAILS	
BK	BLACK
BR	BROWN
BU	BLUE
WH	WHITE
GN	GREEN
GY	GRAY
PK	PINK
OR	ORANGE
RD	RED
VT	VIOLET
YE	YELLOW

FUSE BOX DETAILS		
1	IGNITION	15A
2	EFI RELAY	15A
3	FAN	10A
4	LIGHT	5A
5	INSTRUMENTS	5A
6	LOW/HIGH BEAM&ACC	10A
7	HORN	10A
8	ABS MOTOR	15A
9	ABS VALVE	10A

HIMALAYAN WIRING HARNESS - ACCESSORY SYSTEM

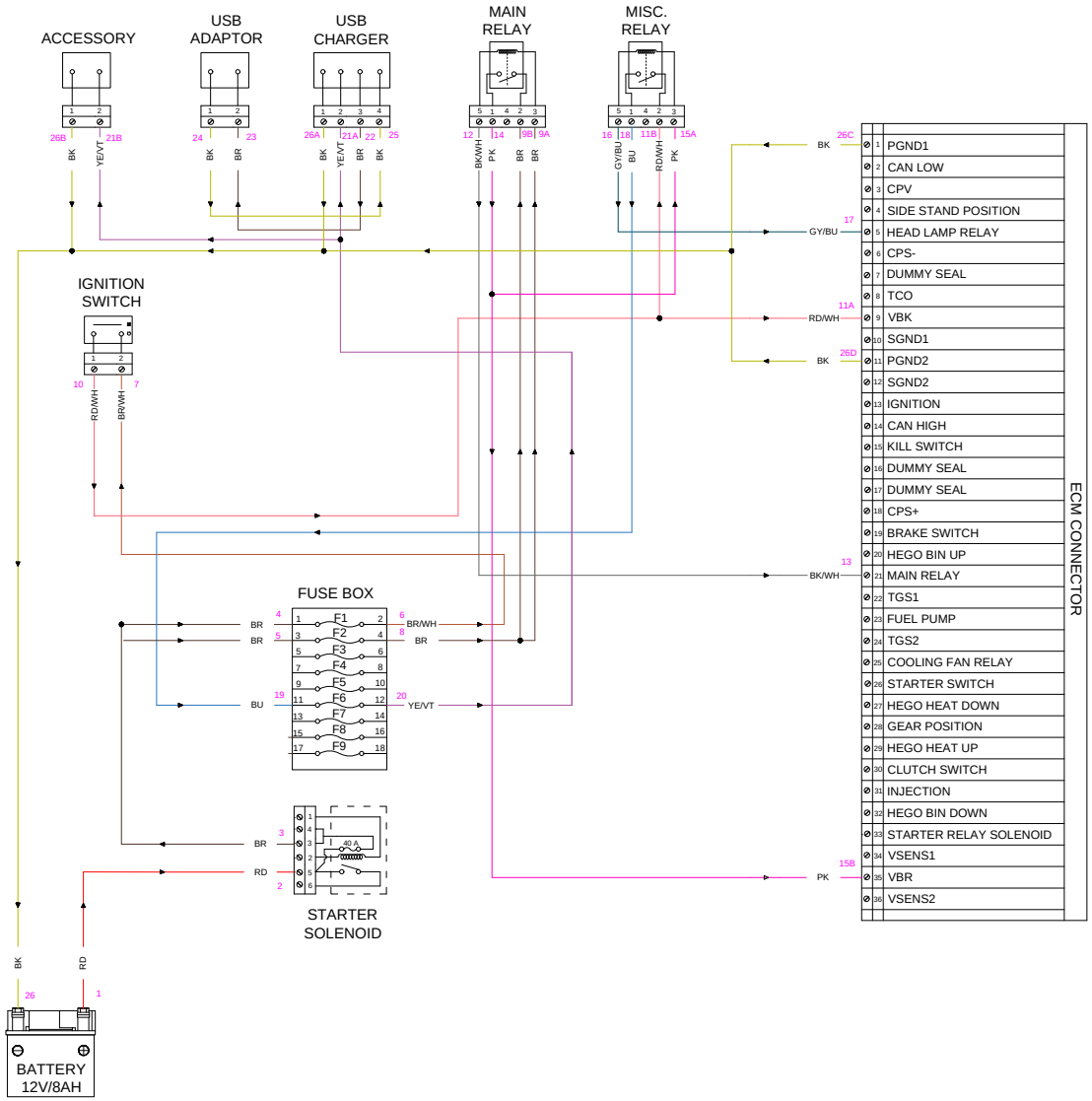

COLOUR CODE DETAILS				
BK	BLACK			
BR	BROWN	FUSE BOX DETAILS		
BU	BLUE	1	IGNITION	15A
WH	WHITE	2	EFI RELAY	15A
GN	GREEN	3	FAN	10A
GY	GRAY	4	LIGHT	5A
PK	PINK	5	INSTRUMENTS	5A
OR	ORANGE	6	LOW/HIGH BEAM&ACC	10A
RD	RED	7	HORN	10A
VT	VIOLET	8	ABS MOTOR	15A
YE	YELLOW	9	ABS VALVE	10A

HIMALAYAN WIRING HARNESS - CHARGING SYSTEM

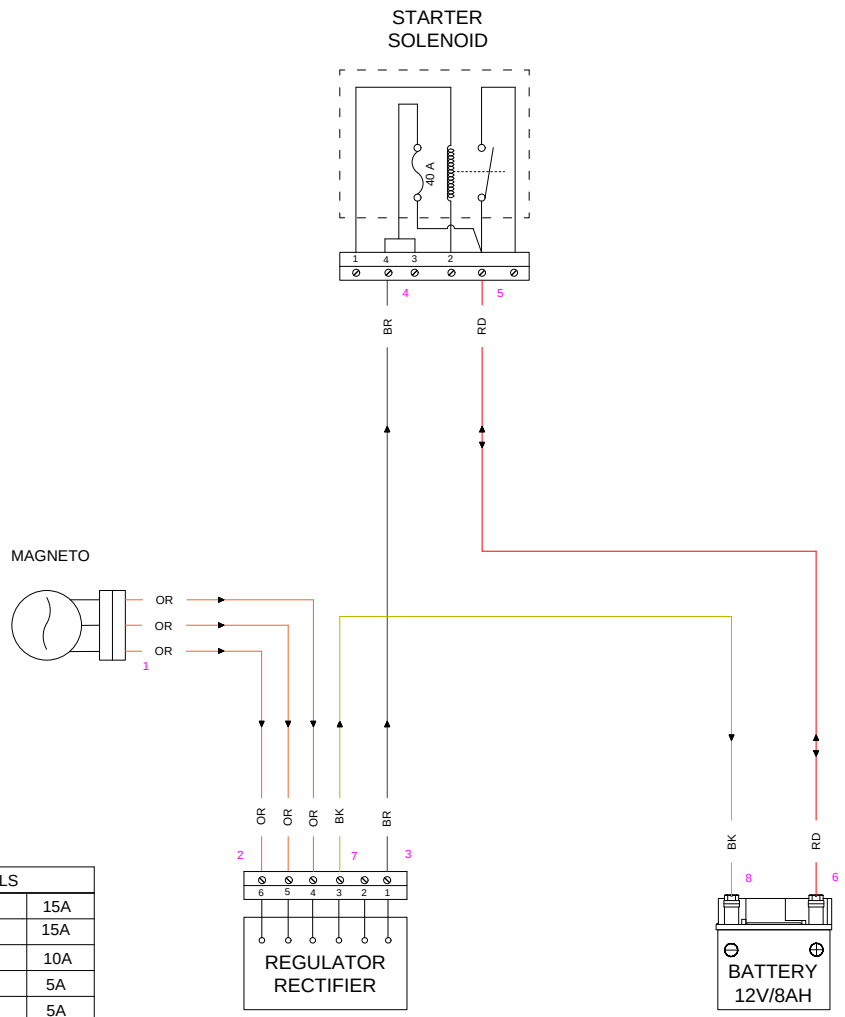

COLOUR CODE DETAILS	
BK	BLACK
BR	BROWN
BU	BLUE
WH	WHITE
GN	GREEN
GY	GRAY
PK	PINK
OR	ORANGE
RD	RED
VT	VIOLET
YE	YELLOW

FUSE BOX DETAILS		
1	IGNITION	15A
2	EFI RELAY	15A
3	FAN	10A
4	LIGHT	5A
5	INSTRUMENTS	5A
6	LOW/HIGH BEAM&ACC	10A
7	HORN	10A
8	ABS MOTOR	15A
9	ABS VALVE	10A

HIMALAYAN WIRING HARNESS - HORN SYSTEM

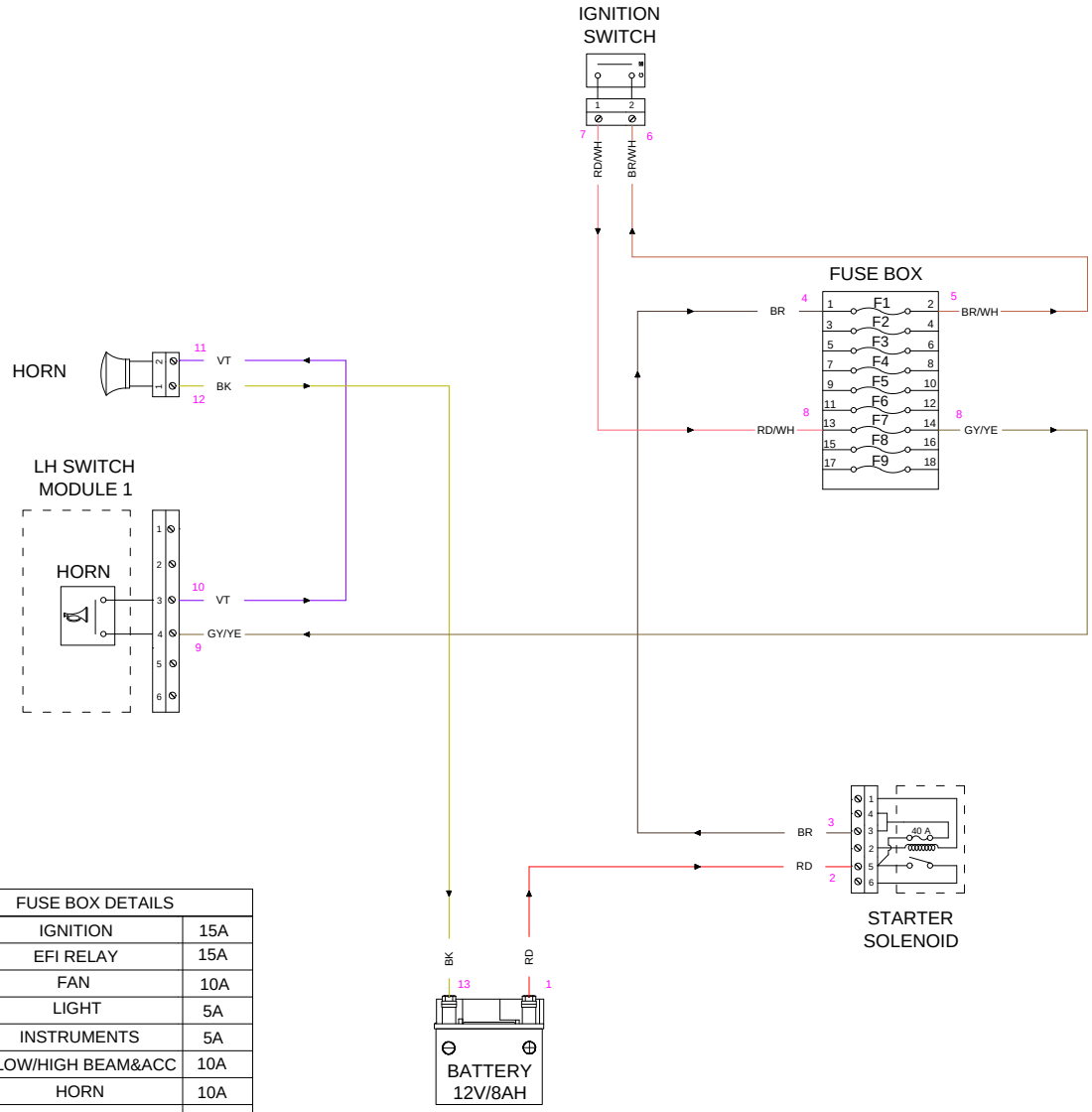

COLOUR CODE DETAILS	
BK	BLACK
BR	BROWN
BU	BLUE
WH	WHITE
GN	GREEN
GY	GRAY
PK	PINK
OR	ORANGE
RD	RED
VT	VIOLET
YE	YELLOW

FUSE BOX DETAILS		
1	IGNITION	15A
2	EFI RELAY	15A
3	FAN	10A
4	LIGHT	5A
5	INSTRUMENTS	5A
6	LOW/HIGH BEAM&ACC	10A
7	HORN	10A
8	ABS MOTOR	15A
9	ABS VALVE	10A

HIMALAYAN WIRING HARNESS - IGNITION, STARTING & CHARGING SYSTEM

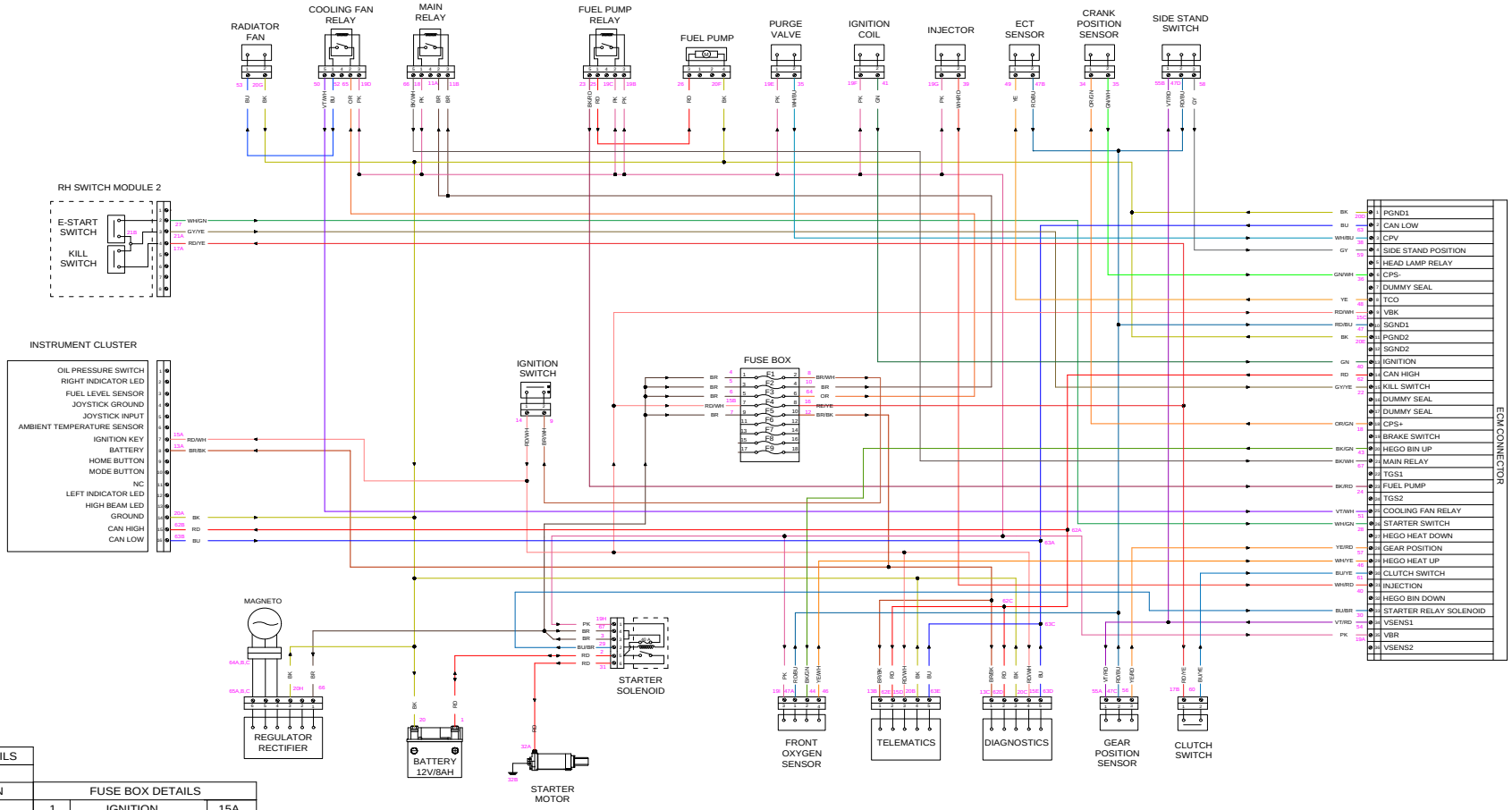

COLOUR CODE DETAILS	
BK	BLACK
BR	BROWN
BU	BLUE
WH	WHITE
GN	GREEN
GY	GRAY
PK	PINK
OR	ORANGE
RD	RED
VT	VIOLET
YE	YELLOW

FUSE BOX DETAILS			
1	IGNITION	15A	
2	EFI RELAY	15A	
3	FAN	10A	
4	LIGHT	5A	
5	INSTRUMENTS	5A	
6	LOW/HIGH BEAM&ACC	10A	
7	HORN	10A	
8	ABS MOTOR	15A	
9	ABS VALVE	10A	

HIMALAYAN WIRING HARNESS - SIGNALLING SYSTEM

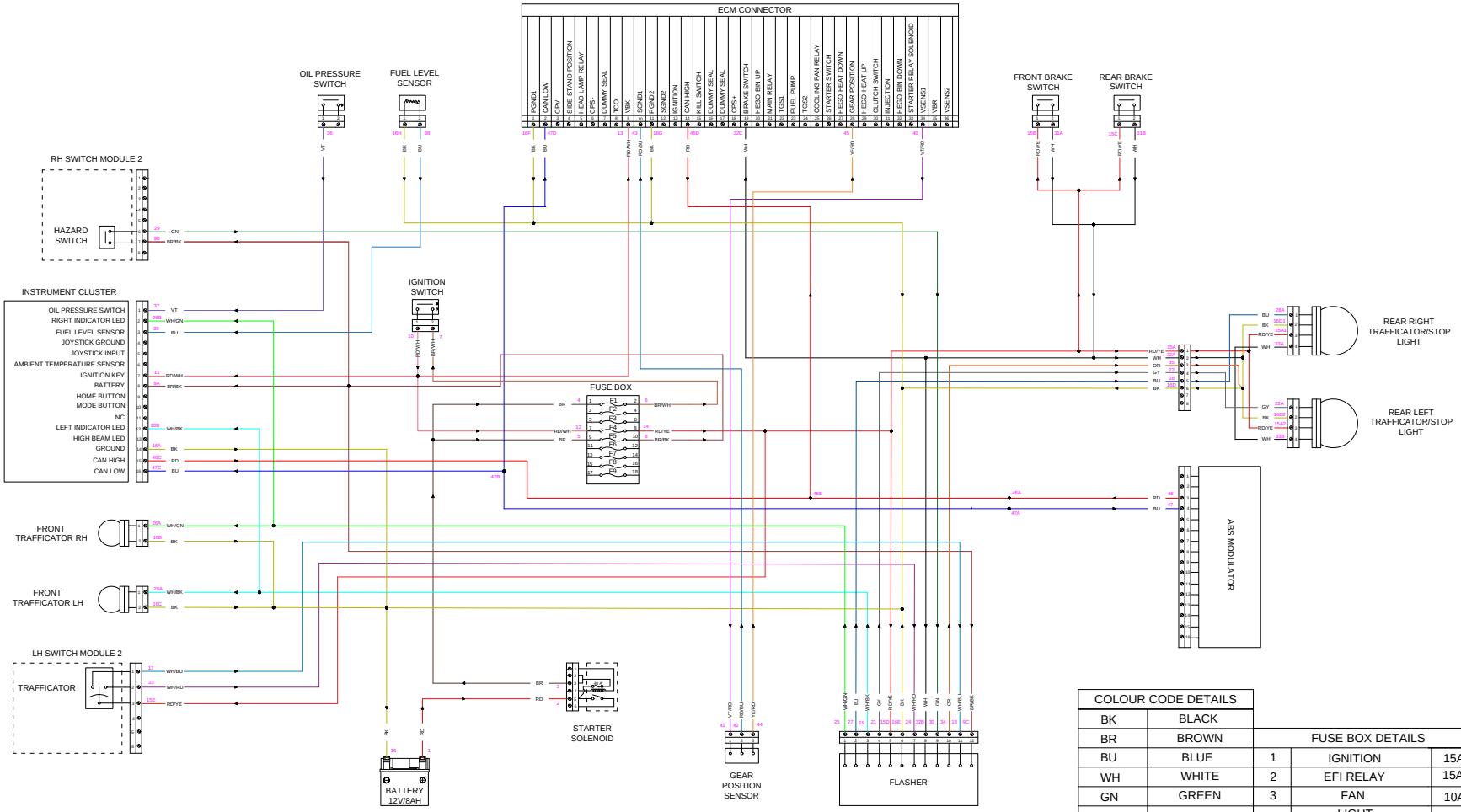

COLOUR CODE DETAILS	
BK	BLACK
BR	BROWN
BU	BLUE
WH	WHITE
GN	GREEN
GY	GRAY
PK	PINK
OR	ORANGE
RD	RED
VT	VIOLET
YE	YELLOW

FUSE BOX DETAILS		
1	IGNITION	15A
2	EFI RELAY	15A
3	FAN	10A
4	LIGHT	5A
5	INSTRUMENTS	5A
6	LOW/HIGH BEAM&ACC	10A
7	HORN	10A
8	ABS MOTOR	15A
9	ABS VALVE	10A

Market Selection in Himalayan Tripper Dash

CONTENTS **PAGE**

12. Cluster Country Selection.....569

12.1. DOL Software version installation 569

12.2. Software update to ECU.....573

12.3. Countries, units & second service reminders 575

12. Cluster Country selection:

Instructions:

- If already DOL software is installed in your computer, proceed with **Software update to ECU.**
- Do not disturb the Motorcycles/ Connections/ Ensure proper internet connectivity during this process.
- Ensure you have admin rights and the firewall or antivirus software is disabled before starting the flashing.

Installation

- Installation of Program file in Laptop/ Desktop (One time Activity).
- Here we have enabled the market selection in Himalayan Tripper dash.
- Install and update the latest DOL software link , for further clarifications please contact your Service Manager.

12.1. DOL Software version installation:

Follow the below steps to install the DOL software:

- An exe file ROYAL ENFIELD DOL V0_17_BETA** will be downloaded, right click and select Run as administrator.

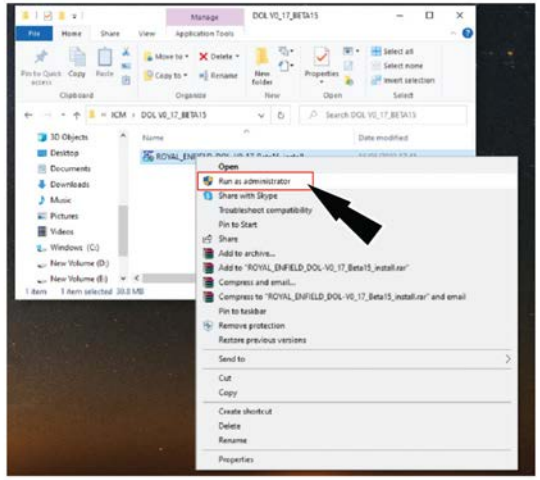

Fig. 12.1.1

- Click on More info in the below screen.

Fig. 12.1.2

- Click on Run anyway button.

Fig. 12.1.3

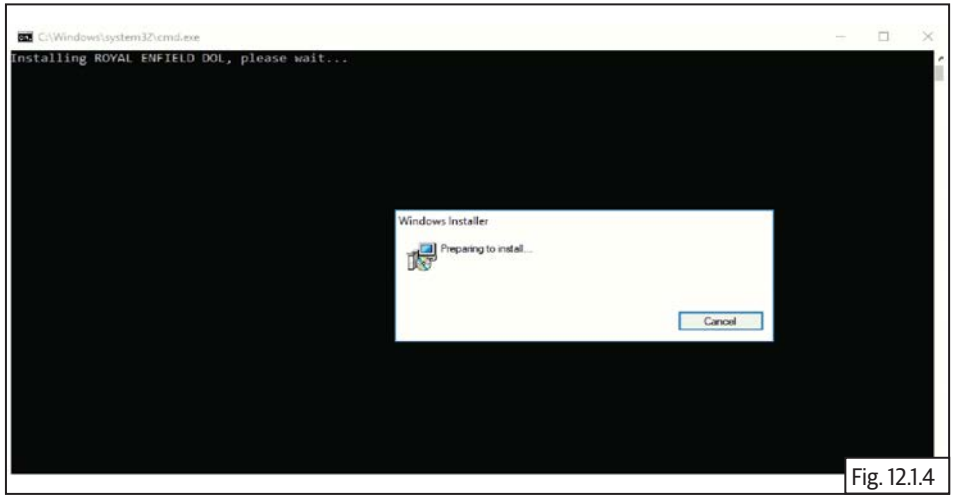

Fig. 12.1.4

- Select folder/ default it will save in the C drive.

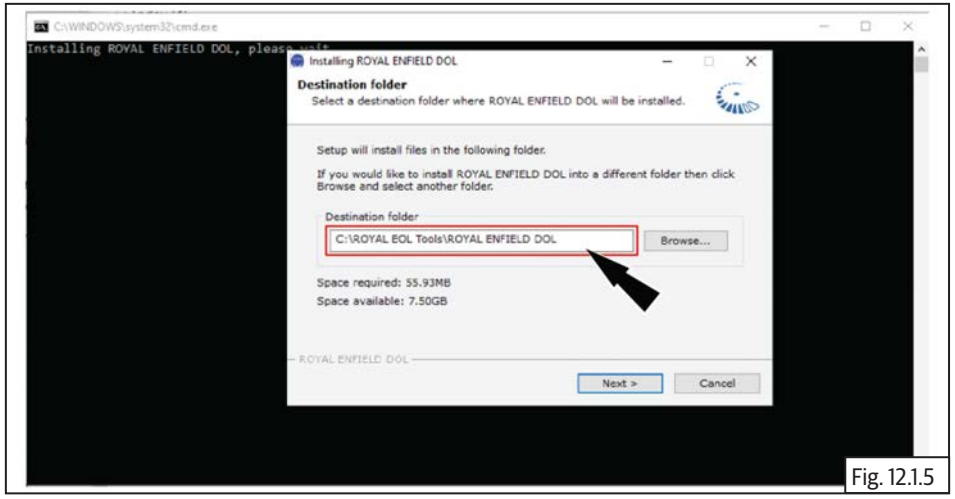

Fig. 12.1.5

- Once the software is installed, click on Finish button.

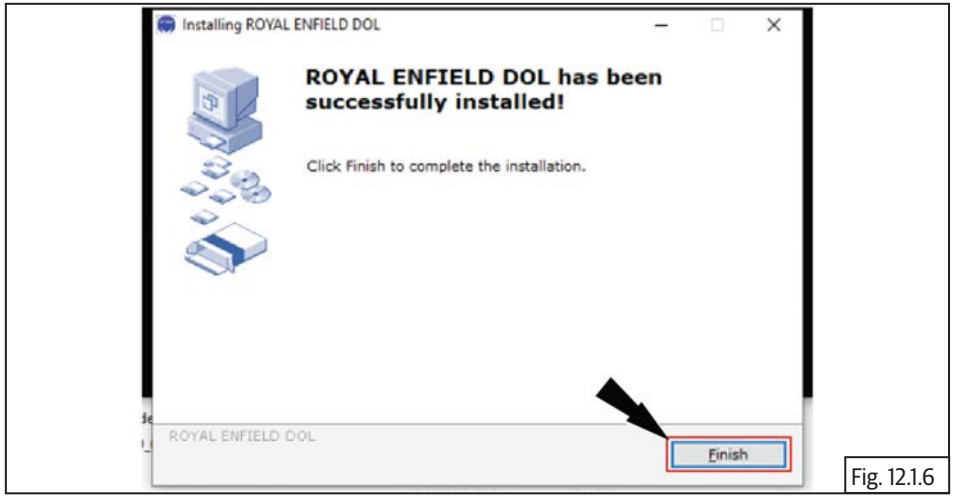

Fig. 12.1.6

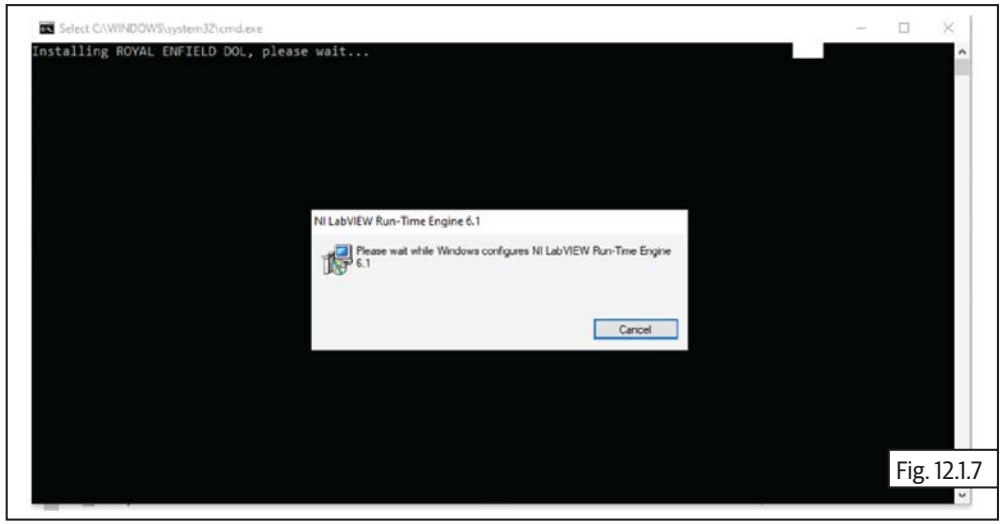

Fig. 12.1.7

- Click on Extract button.

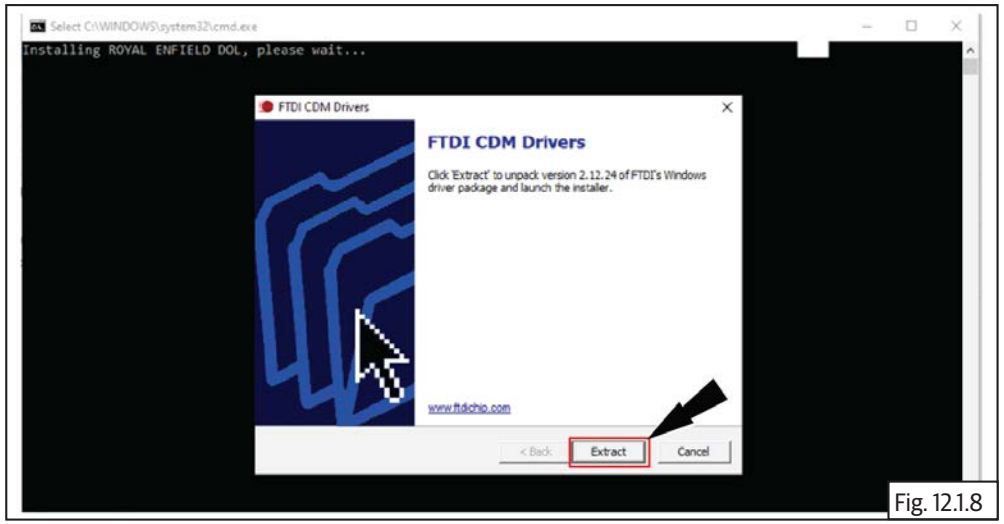

Fig. 12.1.8

- Click on Next button.

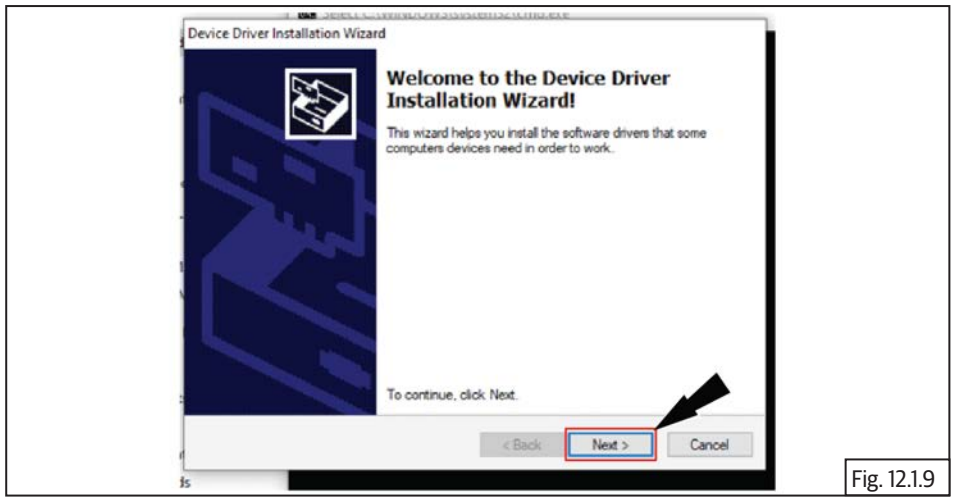

Fig. 12.1.9

- Click on Next button to get the License Agreement.

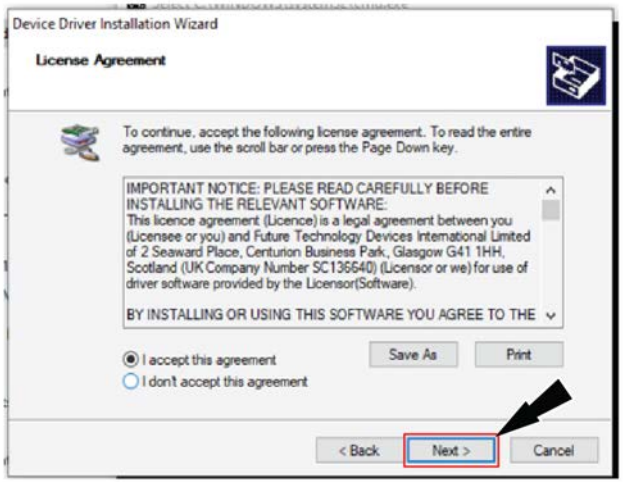

Fig. 12.1.10

- Click on Finish button after the software is installed.

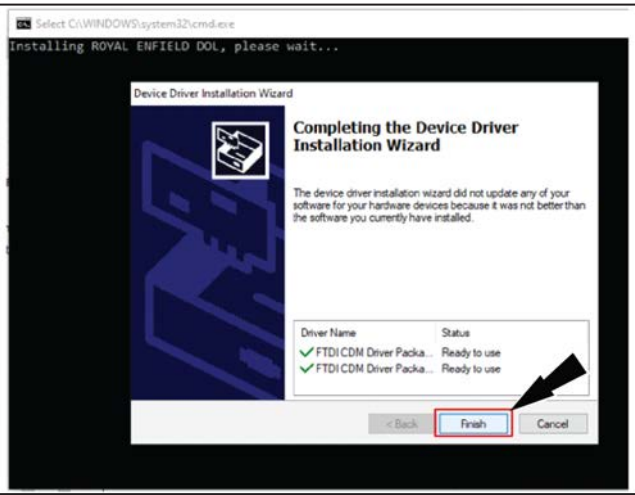

Fig. 12.1.11

Fig. 12.1.12

- Or else select **Himalayan 452_EU-V / BS-VI VTC** manually and select **<Cluster>**.

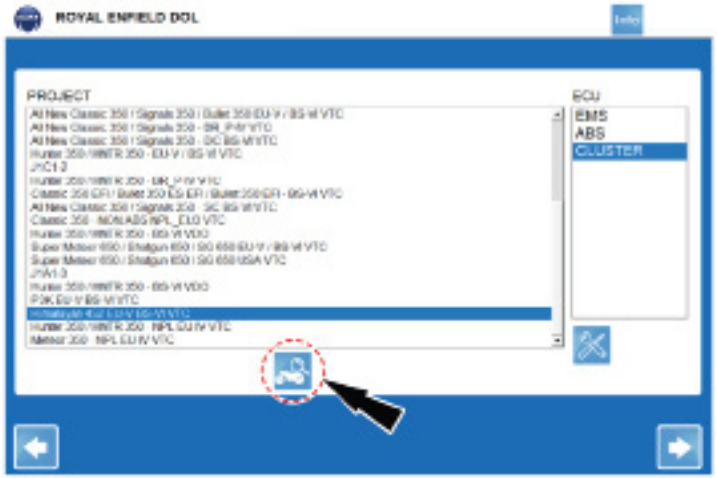

Fig. 12.1.13

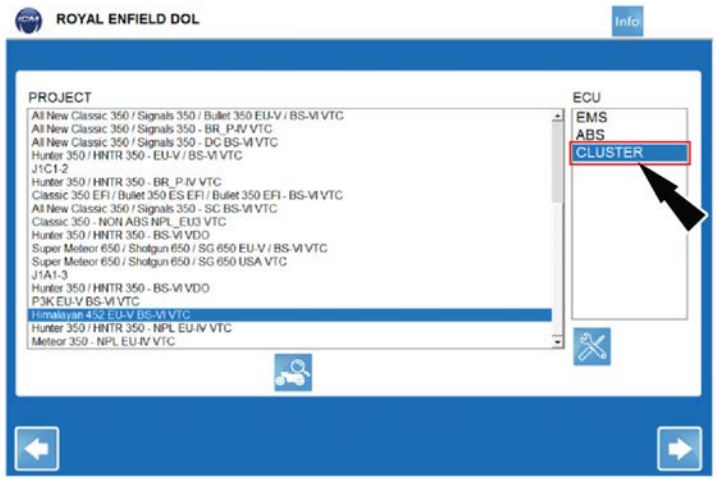

Fig. 12.1.14

- Click on DOL option.

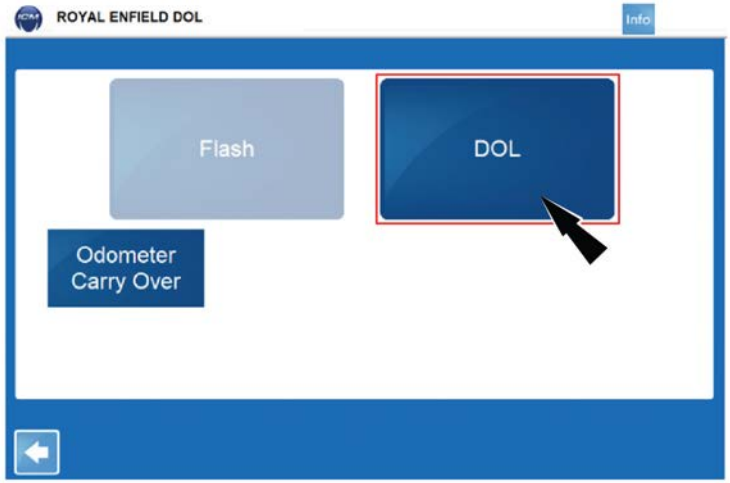

Fig. 12.1.15

- Click on the utility icon which is shown in the encircled area.

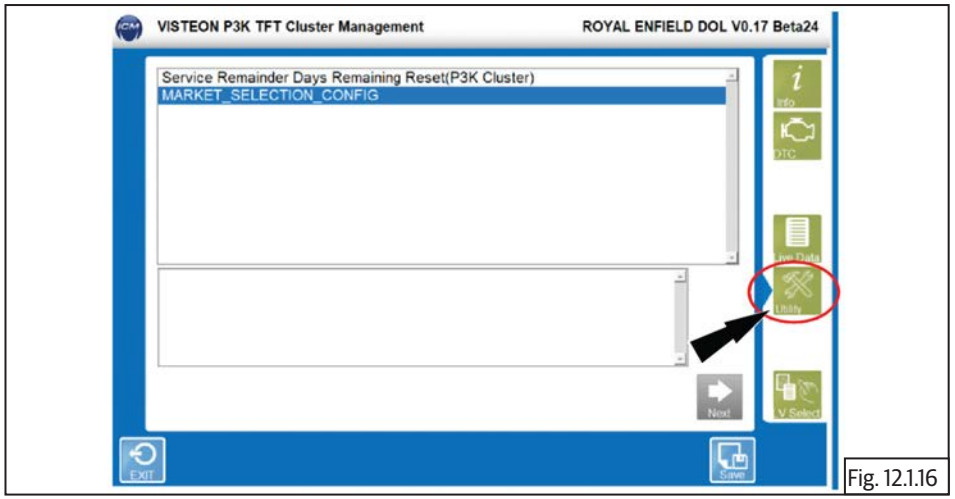

Fig. 12.1.16

- Screen will appear with list of countries once you click the **Market_selection_ config**.

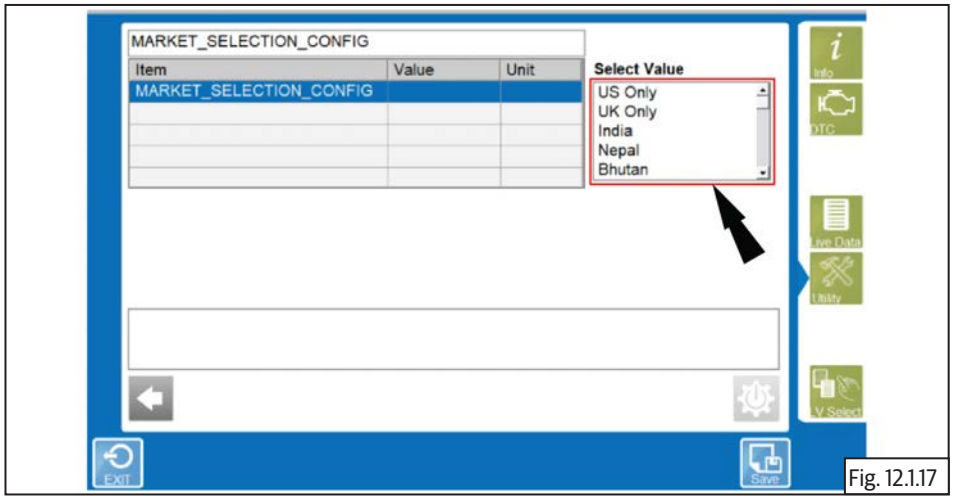

Fig. 12.1.17

- Select the country based on market spec of the vehicle by pressing the select value.

- **For eg**: If we select UK only, the unit will change to miles as shown below.

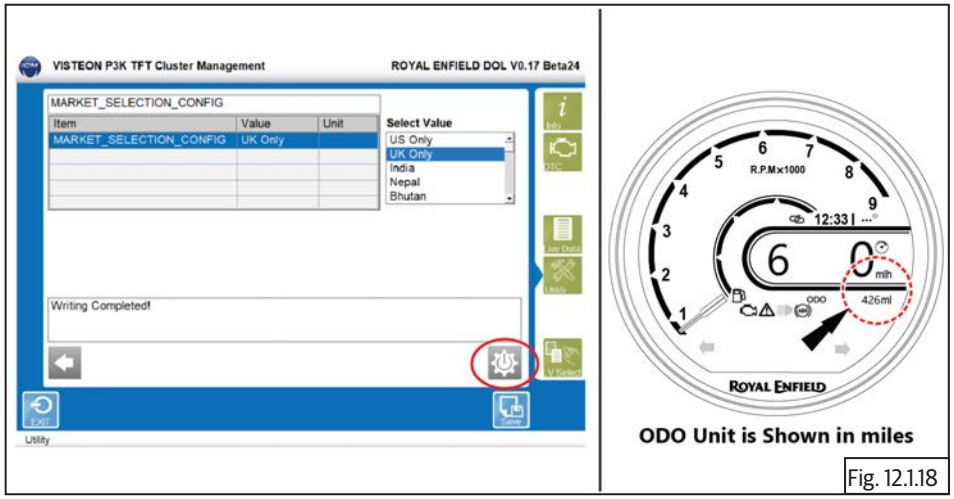

Fig. 12.1.18

- Press the settings icon in the encircled area. After selecting the country, it will run the selection process and once it is done, completed text will be displayed. Then do one ignition transition.

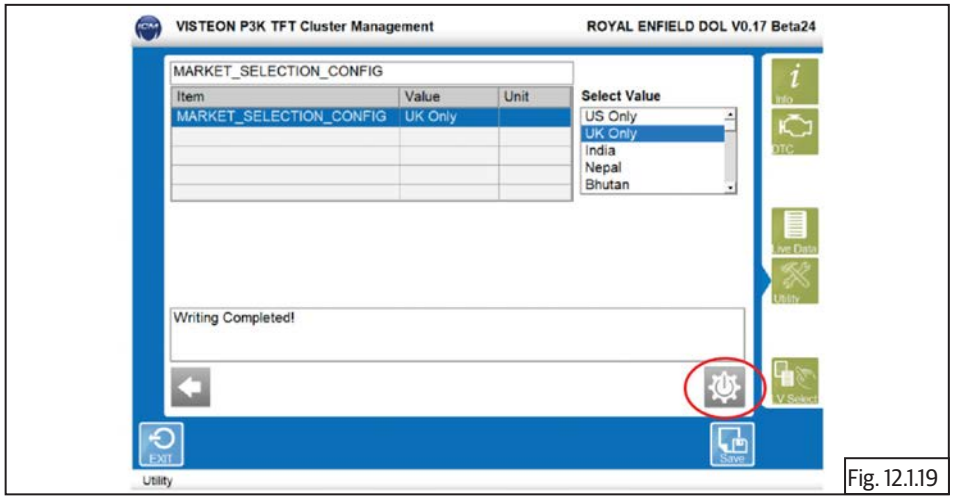

Fig. 12.1.19

- Then after ignition ON you will notice the odometer unit or speedo (mph) is changed to miles.
- Likewise we can configure the country based on the market selection on vehicle in the tripper dash.

12.3. Countries, units & second service reminders:

Some examples with countries, units & second service remainders **(for reference)**.

1. Germany

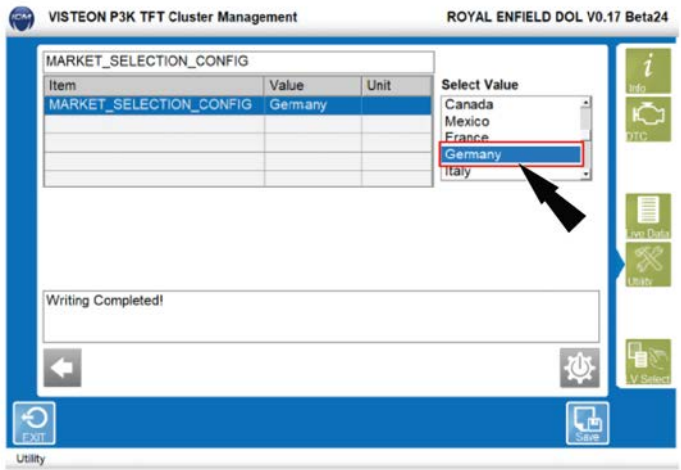

Fig. 12.1.20

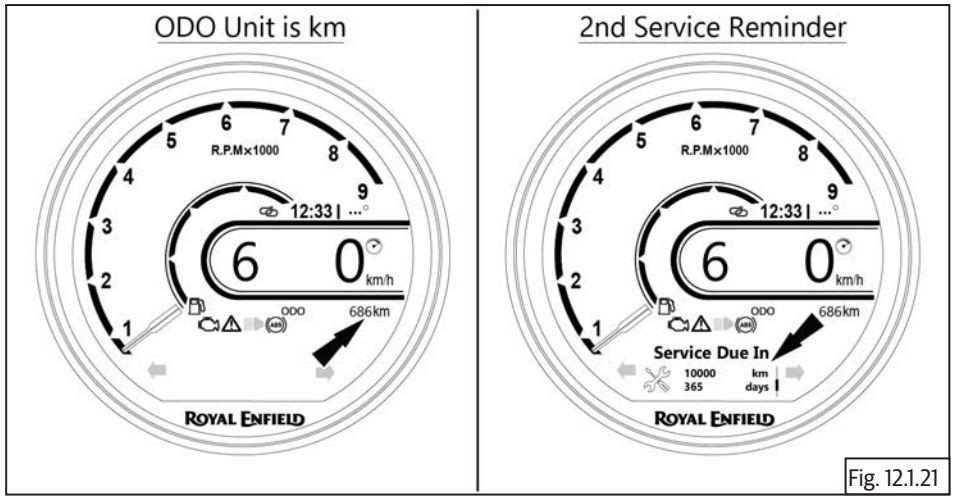

Fig. 12.1.21

- Service interval will be **10K kms** or **12 months (Whichever is earlier)**.

2. UK

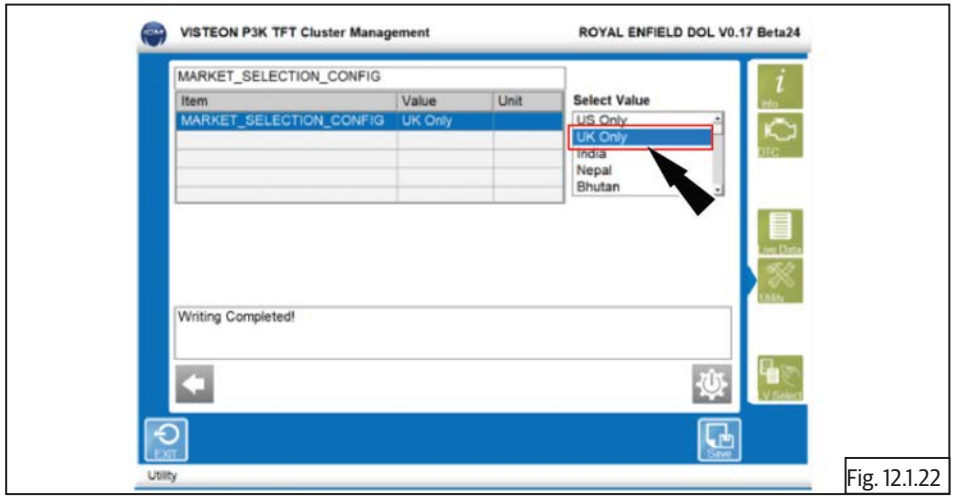

Fig. 12.1.22

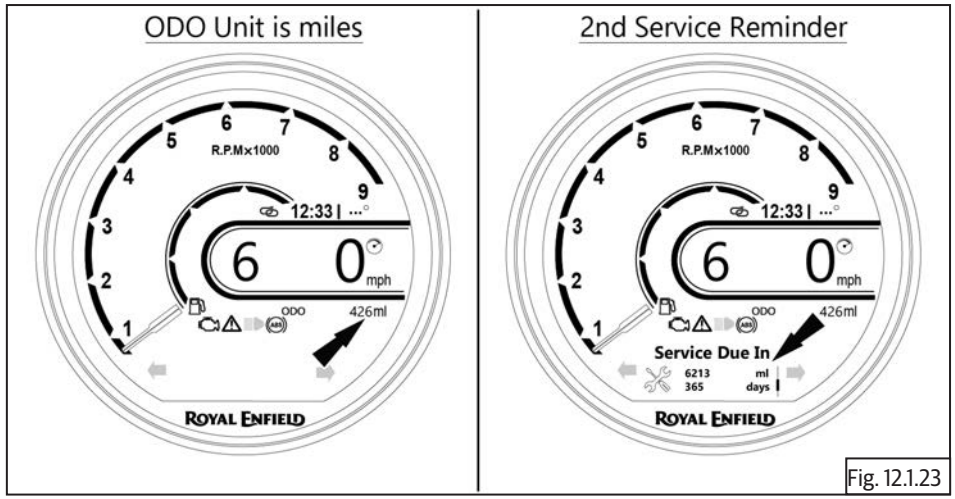

Fig. 12.1.23

- Service interval will be **6213 miles** (equivalent to **10K kms**) or **12 months (Whichever is earlier)**.

3. US

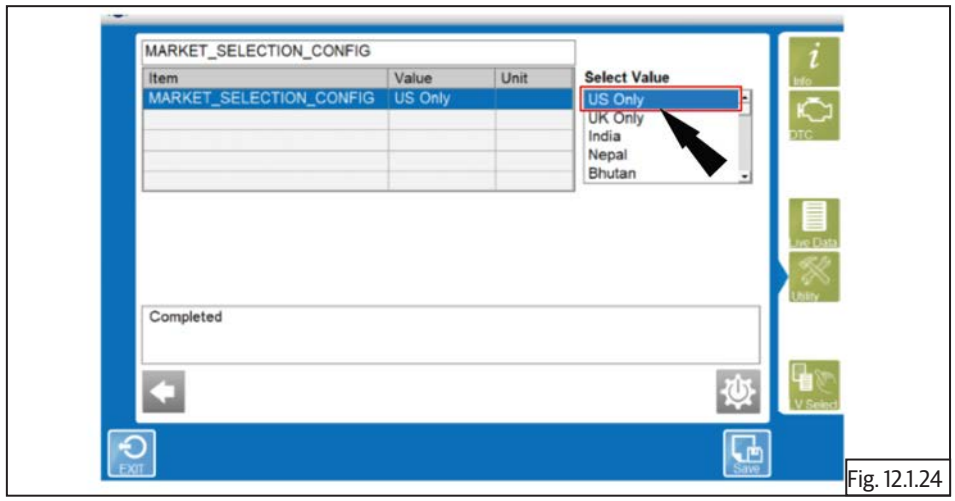

Fig. 12.1.24

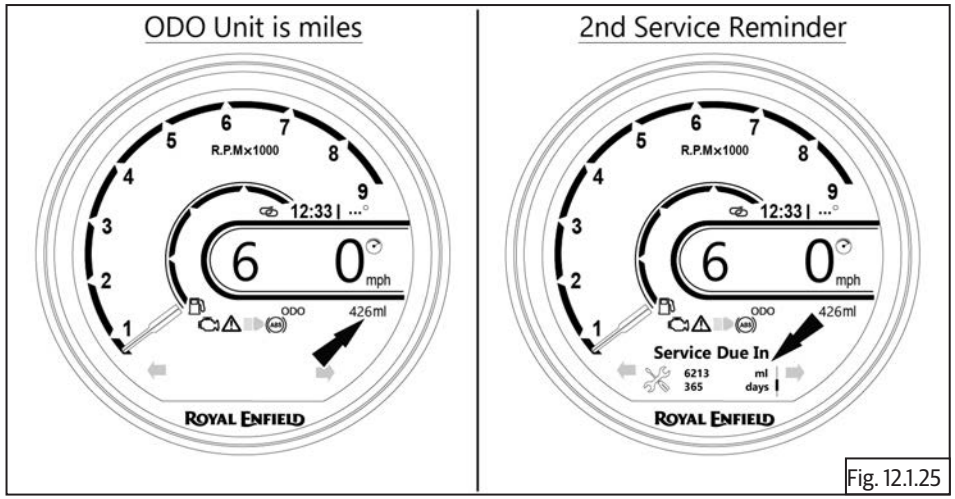

Fig. 12.1.25

- Service interval will be **6213 miles** (equivalent to **10K kms**) or **12 months (Whichever is earlier)**.

Note
As of now only for UK/US and Europe markets service interval is configured to **10K kms** or **12 months (Whichever is earlier)**.
If Cluster is changed at dealer end, VIN no needs to be written on to it. For VIN No update needs to contact the RE Team.

INDEX

A

ABS toner wheel
Adjuster nut
Air Filter Box Assembly
Air Filter Element

B

Balancer Shaft
Battery
Bearing
Brake lamp switch
Brake pedal
Breather Hose

C

Camshaft
Center Stand
Chain adjusters
Chain drive sprocket
Clevis pin
Clutch
Clutch Cable
Clutch Cable
Clutch Cover
Connecting Rod
Control Cables
Countershaft
Crankshaft
Cylinder Barrel
Cylinder Head
Cylinder Head Cover

D

Drain Hose
Drain Plug
Drive chain
Drive chain
Driveshaft

E

E-clip
Engine
Engine Oil
Engine Troubleshooting
EVAP
Exhaust Pipes and Silencers

F

FD Sprocket
Footrests
Fork Assembly
Frame Adjuster
Front Brake Disc
Front Mudguard
Front Wheel
Fuel Filter
Fuel Float
Fuel Tank

G

Gear Position Indicator Sensor
Grab Handle

H

Handlebar
Handlebar Race
Headlamp
Heel guard

I

Ignition switch
Injector
Inlet Manifold Rubber

J

Journal Bearing

L

LH Cylinder Rocker Carrier
Limiter pad
Lower Crankcase
Lubrication

M

Magneto Cover
Magneto Rotor
Manifold Absolute Pressure (MAP) Sensor
Master cylinder assembly
Mudflap

O

Oil Filter
Oil Jet
Oil Pan
Oil Pressure Switch
Oil Pump

P

Piston
Piston Ring

R

Rear Brake Disc
Rear Mudguard
Rear Mudguard Infill Cover
Rear view mirror
Rear Wheel
Reed Valves
Rider Seat

S

Seat Assembly
Sensors
Shifter Drum
Shifter fork
Shifter Shaft
Shock absorber
Side Panels
Side Stand

Spark Plug

Spark Plug Suppressor Caps

Starter Motor

Steering Stem

Swing Arm

Switch module

T

Throttle Body with ECU

Throttle grip sensor

Throttle Position Sensor (TPS)

Timing Chain Tensioner

Toner wheel

V

Valve

W

Wheel hub

Wheel speed sensor assembly

Wheels

Edition : JAN 2024

ROYALENFIELD.COM